CHET F. HARRITT ELEM. SCHOOL

SANTEE SCHOOL DISTRICT

LRC & CLASSROOM ADDITION

8120 ARLETTE STREET, SANTEE, CA 92071

SUPERINTENDENT: **DR. KRISTIN BARANSKI**

GOVERNING BOARD MEMBERS:
PRESIDENT: **KEN FOX**
VICE PRESIDENT: **DUSTIN BURNS**
CLERK: **BARBARA RYAN**
MEMBER: **ELENA LEVENS-CRAIG**
MEMBER: **DIANNE EL-HAJJ**

DIRECTOR OF FACILITIES, PLANNING AND CONST.: CHRISTINA BECKER

SYMBOL LEGEND

Reference	Symbol	Labels
BUILDING SECTION REFERENCE	1 / A2.8	SECTION NUMBER; SHEET NUMBER
DETAIL SECTION REFERENCE	4 / A5.1	DETAIL NUMBER; SHEET NUMBER
OPENING REFERENCE	101	OPENING NUMBER
DEMOLITION KEY NOTE REFERENCE	3	KEY NOTE NUMBER
KEY NOTE REFERENCE	1	KEY NOTE NUMBER
EXTERIOR ELEVATION REFERENCE	3 / A3.1	ELEVATION NUMBER; SHEET NUMBER
COLUMN LINE REFERENCE	A3	COLUMN LINE LETTER/NUMBER
ROOM NAME IDENTIFICATION	OFFICE / A120	ROOM NAME; ROOM NUMBER
INTERIOR ELEVATION REFERENCE	3 / A4.1	NUMBER ON ELEVATION SHEET; INTERIOR ELEVATION SHEET NUMBER
TARGET ELEVATION REFERENCE	1'-2" / T.O.CURB	TARGET ELEVATION; REFERENCE TO ELEVATION
EQUIPMENT IDENTIFICATION REFERENCE	1	EQUIPMENT / ACCESSORY NUMBER
BUILDING SIGN REFERENCE	2A	SIGN NUMBER

ABBREVIATIONS

@	at
.S.T.M.	American Society for Testing and Materials
A/C	air conditioning
AB	anchor bolt
ABV	above
ACOUST	acoustical
ACP	acoustic ceiling panel
ACP	asphaltic concrete paving
ACT	acoustical tile
AD	area drain
ADD	addendum
ADJ	adjacent
ADJUST	adjustable
AFF	above finished floor
AGG	aggregate
ALT	alternate
ALUM	aluminum
ANOD	anodized
AP	access panel
APPROX	approximate
ARCH	architect(ural)
AUTO	automatic
BD	board
BEL	below
BIT	bituminous
BLDG	building
BLK	block
BLKG	blocking
BM	bench mark
BOT	bottom
BP	blank panel
BRG	bearing
BS	both sides
BSMT	basement
BTWN	between
BUR	built-up roofing
BW	both ways
C.A.C.	California Administrative Code
C.B.C.	California Building Code
C.C.R.	California Code of Regulations
C.F.	cubic foot
C.O.	conduit only
C.Y.	cubic yard
CAB'T	cabinet
CAD	cadmium
CB	catch basin
CDS	Casework Design Series
CEM	cement
CER	ceramic
CGF	ceramic granule flooring
CHBD	chalkboard
CI	cast iron
CIPC	cast-in-place concrete
CJ	control joint
CL	centerline
CLF	chain link fence
CLG	ceiling
CLOS	closet
CMT	ceramic mosaic (tile)
CMU	concrete masonry unit
COL	column
COMB	combination
COMPO	composition
COMPT	compartment
CONC	concrete
CONN	connect(ion),(or)
CONST	construction
CONT	continuous or continue
CONTR	contract(or)
CORRUG	corrugated
CPT	carpet
CRS	course(s)
CS	countersink
CT	ceramic tile
CTR	counter
CTSK	countersink screw
CUST	custodian
CWP	carpet with pad
DBL.ACT.	double acting
DEMO	demolish, demolition
DET	detail
DF	drainking fountain
DH	double hung
DIM	dimension
DL	dead load
DN	down
DPRF	dampproofing
DR	door
DS	downspout
DSA	Division of the State Architect
DTA	dovetail anchor
DTL	detail
DTS	dovetail anchor slot
DW	drywall
DWG	drawing
DWR	drawer
E	East
EA	each
EB	expansion bolt
EC	evaporative cooler
EF	each face
EHD	electric hand dryer
EJ	expansion joint
EL	elevation
ELEC	electric(al)
ELEV	elevation
EMER	emergency
EMT	electrical metallic conduit
ENCL	enclose(ure)
EP	electrical panelboard
EQ	equal
EQUIP	equipment
EST	estimate
EW	each way
EWC	electric water cooler
EXH	exhaust
(E)	existing
EXP	exposed
EXT	exterior
FB	face brick
FBD	fiberboard
FBO	furnished by others
FD	floor drain
FDN	foundation
FE	fire extinguisher
FEC	fire extinguisher cabinet
FF	finish floor
FFE	finished floor elevation
FGL	fiberglass
FH	fire hydrant
FHC	fire hose cabinet
FHMS	flathead machine screw
FHWS	flathead wood screw
FIN	finish(ed)
FIN.FLR.	finished floor line
FL	flow line
FLR	floor
FLSH	flashing
FLUR	fluorescent
FND	feminine napkin disposal
FOC	face of concrete
FOF	face of finish
FOM	face of masonry
FOS	face of studs
FP	fireproof
FRM(G)	frame(d),(ing)
FRT	fire-retardant
FT	foot
FTG	footing
FUR	furred(ing)
FUT	future
FWP	fabric-wrapped acoustic panel
GA	gage, gauge
GBBR	grab bar
GC	general contractor
GCMU	glaze concrete masonry units
GD	gutter drain
GI	galvanized iron
GLB	glued laminated beam
GPL	gypsum plaster
GR	grade(ing)
GRT	grout
GSKT	gasket
GV	gravity vent
GWB	gypsum drywall
GWG	gypsum drywall water-resistant
GWX	gypsum drywall type X
GYP	gypsum
HB	hose bibb
HC	hollow core
HDBD	hardboard
HDR	header
HDW	hardware
HDWD	hardwood
HEX	hexagonal
HM	hollow metal
HORIZ	horizontal
HP	high point
HR	handrail
HT	height
HTG	heating
HVAC	heating, ventilating, and air conditioning
HWH	hot water heater
I.C.B.O.	International Conference of Building Officials
ID	inside diameter
IN	inch
INCL.	include(d),(ing)
INSUL.	insulate(d),(ing)
INT	interior
IPS	iron pipe size
JC	janitor's closet
JST	joist
JT	joint
KIT	kitchen
KO	knockout
KS	knee space
L	length
L.P.G.	liquified propane gas
LAB	laboratory
LAM	laminate(d)
LAV	lavatory
LB	lag bolt
LBL	label
LLL	live load
LT	light
LT.WT.	lightweight
LVR	louver
M	modified
MAS	masonry
MATL	material(s)
MAX	maximum
MB	machine bolt
MC	medicine cabinet
MECH	mechanic(al)
MED	medium
MFR(S)	manufacturer(s)
MH	manhole
MIN	minimum
MIR	mirror
MISC	miscellaneous
MO	masonry opening
MOD	modular
MOD.BIT.	modified bitumen
MOLD	molding, moulding
MTD	mount(ed)
MTG	mount(ing)
MTL	metal
MULL	mullion
MWP	membrane waterproofing
N	North
NAT	natural
NIC	not in contract
NOM	nominal
NR	noise reduction
NRC	noise reduction coefficient
OBL	oblique
O/C	on center(s)
OD	outside diameter
OFD	overflow drain
OFS	overflow scupper
OH	overhead
OPG	opening
OPP	opposite
OSA	Office of the State Architect
PA	public address system
PAR	parallel
PART.BD.	particle board
PCC	pre-cast concrete
PCF	pounds per cubic foot
PCPL	Portland cement plaster
PH	panic hardware
PKG	parking
PL	property line
PL	plate
PL.GL.	plate glass
PLAM	plastic laminate
PLAS	plaster
PLF	pounds per lineal foot
PLWD	plywood
PNL	panel
PNT	paint(ed)
#	pound(s)
PSF	pounds per square foot
PSI	pounds per square inch
PT	point
PTD	painted
PTD	paper towel dispenser
PTDF	pressure treated douglas fir
PTF	flat paint
PTG	gloss paint
PTR	paper towel receptacle
PTS	semi-gloss paint
PVC	polyvinyl chloride
PVMT	pavement
PWJ	plywood web joist
QT	quarry tile
R	riser
RAD	radius
RAR	return air register
RB	rubber base
RCB	rubber carpet base
RD	roof drain
RDWD	redwood
REF	reference
REFL	reflect(ed),(ive),(or)
REFR	refrigerator
REG	register
REINF	reinforced (concrete pipe)
RES	resilient
RET	return
REV	revision
RFG	roofing
RFND	recessed feminine napkin disposal
RFNS	recessed feminine napkin dispenser
RH	roof hatch
RHB	recessed hose bibb
RJ	roof jack
RL	roof ladder
RM	room
RO	rough opening
ROD	roof overflow drain
ROW	right-of-way
RPTD	recessed paper towel dispenser
RPTR	recessed paper towel receptacle/disposal
RSCD	recessed seat cover dispenser
RTPD	recessed toilet paper dispenser
RTSB	rubber topset base
RWC	rainwater conductor
S	South
S.F.M.	State Fire Marshal
S.Y.	square yard
SAR	supply air register
SC	solid core
SCB	sheet cove base
SCH	schedule
SD	storm drain
SECT	section
SFGL	safety glass
SHT	sheet
SHTG	sheathing
SIM	similar
SKYLT	skylight
SNT	sealant
SPECS	specification(s)
SQ	square
SS	service sink
SS	stainless steel
STA	station
STC	sound transmission coefficient
STD	standard
STL	steel
STOR	storage
STR	structural
SUSP	suspended
SYST	system
T	tread
TAC	tectum acoustic panel
TEL	telephone
THK	thick(ness)
TOGLB	top of glued laminated beam
TOP	top of parapet
TOS	top of sheathing
TOW	top of wall
TP	top of plywood
TPD	toilet paper dispenser
TPTN	toilet partition
TR	transom
TS	top of steel
TSCD	toilet seat cover dispenser
TV	television
TYP	typical
U.B.C.	Uniform Building Code
U.L.	Underwriters' Laboratory
U.N.O.	unless noted otherwise
UC	undercut
UNFIN	unfinished
UR	urinal
VAR	varies
VB	vapor barrier
VCR	video cassette recorder/player
VCT	vinyl composition tile
VERT	vertical
VEST	vestibule
VF	vinyl fabric
VG	vertical grain
VPL	veneer plaster
VS	vent stack
VTS	vinyl wrapped tack surface
VWC	vinyl wall covering
W	West
W	width, wide
WI	Woodwork Institute
W/	with
W/O	without
WB	wood base
WC	water closet
WD	wood
WDW	window
WG	wired glass
WH	wallhung
WI	wrought iron
WJ	weakened plane joint
WKTP	walk top
WP	waterproofing
WPT	working point
WR	water repellent
WSCT	wainscot
WT	weight
WTR	water
WTW	wall to wall
X	factory finish
XG	existing grade
YD	yard

GENERAL NOTES

1. ACCESSIBILITY: THE SITE AND ALL BUILDINGS SHALL BE ACCESSIBLE TO PERSONS WITH DISABILITIES IN COMPLIANCE WITH TITLE 24 OF THE CALIFORNIA CODE OF REGULATIONS AND THE ACCESSIBILITY GUIDELINES OF THE AMERICANS WITH DISABILITIES ACT OF 1990. IT IS THE INTENT OF THESE PLANS AND SPECIFICATIONS TO PROVIDE ACCESS TO PERSONS WITH DISABILITIES.

2. COORDINATION AND CLARITY: FOR THE CLARITY OF SEPARATE ITEMS OF WORK, STRUCTURAL, MECHANICAL, PLUMBING, ELECTRICAL, CIVIL AND LANDSCAPING ITEMS MAY NOT APPEAR ON THE ARCHITECTURAL DRAWINGS. THE INTENT OF THE PLANS AND SPECIFICATIONS IS TO COMPLEMENT EACH OTHER, AND WHAT IS REQUIRED BY ONE SHALL BE REQUIRED BY ALL.

3. JOB SITE OBSERVATIONS: THE ARCHITECT AND CONSULTANT ENGINEERS WILL MAKE VISITS TO THE JOB SITE TO OBSERVE THE WORK TO DETERMINE, IN GENERAL, IF THE WORK IS BEING PERFORMED IN A MANNER INDICATING THAT THE WORK, WHEN COMPLETED, WILL BE IN ACCORDANCE WITH THE CONTRACT DOCUMENTS. THE JOB SITE OBSERVATIONS BY THE ARCHITECT AND CONSULTING ENGINEERS DO NOT RELIEVE THE CONTRACTOR OF ANY OF HIS RESPONSIBILITY. THE JOB SITE OBSERVATIONS BY THE ARCHITECT AND CONSULTING ENGINEERS DO NOT RELIEVE THE CONTRACTOR OF ANY OF HIS RESPONSIBILITY. THE JOB SITE OBSERVATIONS BY THE ARCHITECT AND CONSULTING ENGINEERS DO NOT IN ANY WAY MEAN THAT THE ARCHITECT OR ENGINEER IS A GUARANTOR OF THE CONTRACTOR'S WORK; IN CONTROL OF THE SAFETY IN, ON, OR ABOUT THE JOB SITE; IN CONTROL OF THE SAFETY OR ADEQUACY OF ANY EQUIPMENT, BUILDING COMPONENT, SCAFFOLDING, FORMS, OR OTHER WORK AIDS; OR SUPERINTENDING OF THE WORK.

4. DEFECTS IN THE WORK: IF THE ARCHITECT OR CONSULTING ENGINEERS FIND DEFECTS IN THE WORK, THEY WILL NOTIFY THE CONTRACTOR SO THAT THE DEFECT MAY BE CORRECTED. IT IS NOT THE INTENT , UNDER ANY CIRCUMSTANCES, FOR THE ARCHITECT OR CONSULTING ENGINEER TO BECOME A GUARANTOR OF THE CONTRACTOR'S PERFORMANCE BY THESE ACTIVITIES. THE FACT THAT A CONSTRUCTION DEFECT OR ERROR GOES UNDETECTED DURING A JOB SITE VISIT SHALL NOT MAKE THE CORRECTION OF CONSTRUCTION DEFECTS AND ERRORS IN THE WORK, AND THE CONSTRUCTION MEANS, METHODS, TECHNIQUES, SEQUENCES OR PROCEDURES AND THE SAFETY PRECAUTIONS REQUIRED FOR COMPLETING THE WORK AS INDICATED BY THE CONTRACT DOCUMENTS.

5. EXISTING UTILITIES: THE LOCATIONS OF EXISTING UNDERGROUND UTILITIES, IF SHOWN ON THE DRAWINGS, ARE SHOWN IN AN APPROXIMATE WAY ONLY, AND HAVE NOT BEEN INDEPENDENTLY VERIFIED BY THE DISTRICT OR ITS REPRESENTATIVE.
THE ARCHITECT AND HIS CONSULTING ENGINEERS ARE NOT RESPONSIBLE FOR THE LOCATION OF UNDERGROUND UTILITIES OR STRUCTURES, WHETHER OR NOT SHOWN OR DETAILED AND INSTALLED UNDER THIS OR ANY OTHER CONTRACTS.
PRIOR TO ANY EXCAVATION UNDER THIS CONTRACT, THE CONTRACTOR SHALL:
A. REQUEST FROM THE OWNER ALL AVAILABLE RECORD DRAWINGS OF THE AREAS COVERED BY THE WORK.
B. ARRANGE AND CONDUCT A MEETING WITH THE DISTRICT'S REPRESENTATIVE TO CONDUCT A SITE REVIEW OF POTENTIAL UTILITY LOCATIONS WITH THE DISTRICT'S MAINTENANCE STAFF.
C. THE CONTRACTOR SHALL OBTAIN AND PAY FOR THE SERVICES OF A PRIVATE UTILITY LOCATING SERVICE, WHICH SHALL, BASED ON INFORMATION OBTAINED FROM THE ABOVE RESOURCES, AND FROM THE TOPOGRAPHIC SURVEY AND THE PRESENCE OF VISIBLE FACILITIES SUCH AS BUILDINGS, METERS, JUNCTION BOXES, PIPES LEAVING BUILDINGS, CATCH BASINS, CLEANOUTS, SPRINKLER HEADS, VALVES, ETC., LOCATE AND MARK ALL EXISTING UNDERGROUND UTILITY LINES.
D. THE CONTRACTOR SHALL CONTACT UNDERGROUND SERVICE ALERT OF SOUTHERN CALIFORNIA 1800.422.4133. AT LEAST 48 HOURS PRIOR TO ANY EXCAVATION, AND SHALL NOT EXCAVATE UNTIL VERIFICATION FROM UNDERGROUND SERVICE ALERT THAT ALL PUBLIC UTILITIES SERVING THE SITE HAVE LOCATED AND MARKED THEIR UNDERGROUND SERVICES.

THE CONTRACTOR AND ALL SUBCONTRACTORS SHALL EXERCISE EXTREME CAUTION IN EXCAVATING AND TRENCHING ON THIS SITE TO AVOID EXISTING UNDERGROUND UTILITIES, AND TO PREVENT HAZARDS TO PERSONNEL AND/OR DAMAGE TO EXISTING UNDERGROUND UTILITIES OR STRUCTURES. THESE DRAWINGS AND SPECIFICATIONS DO NOT INCLUDE NECESSARY COMPONENTS FOR CONSTRUCTION SAFETY WHICH IS SOLELY THE RESPONSIBILITY OF THE CONTRACTOR.

6. SHOULD UNIDENTIFIED UTILITIES BE DISCOVERED BY THE CONTRACTOR IN THE COURSE OF THE WORK, THE CONTRACTOR SHALL IMMEDIATELY NOTIFY THE DISTRICT, AND SHALL UNDERTAKE WHATEVER EMERGENCY PROCEDURES HE DEEMS NECESSARY TO PROTECT PEOPLE AND PROPERTY. THE DISTRICT SHALL REIMBURSE THE CONTRACTOR FOR THE COST OF SUCH REPAIRS, IN ACCORDANCE WITH THE GENERAL CONDITIONS.

7. CHANGES TO THE APPROVED DRAWINGS AND SPECIFICATIONS SHALL BE MADE BY AN THE ADDENDA OR CONSTRUCTION CHANGE DOCUMENT (CCD) APPROVED BY THE DIVISION OF THE STATE ARCHITECT AS REQUIRED BY SECTION 4-338, PART 1, TITLE 24 C.C.R., SEE DESCRIPTION BELOW.

8. ADDENDA: CHANGES OR ALTERATIONS OF THE APPROVED PLANS OR SPECIFICATIONS PRIOR TO EDITING A CONSTRUCTION CONTRACT FOR THE WORK INVOLVED SHALL BE MADE BY MEANS OF ADDENDA. ADDENDA SHALL BE MANUALLY SIGNED BY THE ARCHITECT OR ENGINEER IN GENERAL RESPONSIBLE CHARGE OF PREPARATION OF THE PLANS AND SPECIFICATIONS AND BY THE ARCHITECT OR ENGINEER DELEGATED RESPONSIBILITY FOR THE PORTION AFFECTED BY THE ADDENDA AND SHALL BE APPROVED BY THE DIVISION OF THE STATE ARCHITECT. ONE COPY IS REQUIRED FOR THE FILES OF THE DIVISION OF THE STATE ARCHITECT.

9. CONSTRUCTION CHANGE DIRECTIVES: CHANGES OR ALTERATIONS OF THE APPROVED PLANS OR SPECIFICATIONS AFTER A CONTRACT FOR THE WORK HAS BEEN LET SHALL BE MADE BY MEANS OF A CONSTRUCTION CHANGE DOCUMENT (CCD). CCDs SHALL STATE THE REASON FOR THE CHANGE AND SHALL BE ACCOMPANIED BY SUPPLEMENTARY DRAWINGS WHERE NECESSARY. ALL CCDs SHALL BE MANUALLY SIGNED BY THE ARCHITECT OR ENGINEER IN GENERAL RESPONSIBLE CHARGE OF OBSERVATION OF THE WORK OF CONSTRUCTION OF THE PROJECT AND BY THE ARCHITECT OR REGISTERED ENGINEER DELEGATED RESPONSIBILITY FOR OBSERVATION OF THE PORTION OF THE WORK OF CONSTRUCTION AFFECTED BY THE CCD AND SHALL BEAR THE APPROVAL OF THE SCHOOL BOARD AND THE DIVISION OF THE STATE ARCHITECT. ONE COPY OF EACH CCD IS REQUIRED FOR THE FILES OF THE DIVISION OF THE STATE ARCHITECT.

10. FIRE SAFETY: SEE C.F.C. CHAPTER 33 FOR FIRE SAFETY DURING CONSTRUCTION AND DEMOLITION.

11. A PROJECT INSPECTOR EMPLOYED BY ***SANTEE*** SCHOOL DISTRICT, APPROVED BY DSA, IN ACCORDANCE WITH THE REQUIREMENTS OR STATE OF CALIFORNIA BUILDING CODE, TITLE 24, PART1, AND QUALIFIED IN ACCORDANCE WITH DIVISION OF STATE ARCHITECT WILL BE ASSIGNED TO THE WORK. HIS DUTIES ARE SPECIFICALLY DEFINED IN TITLE 24, PART 1, SECTION 4-342. SEE SPECIFICATION FOR COMPLETE LISTING OF DUTIES.

CLASSIFICATION TO BE "CLASS 1" AND CERTIFIED BY THE DIVISION OF THE STATE ARCHITECT.

12. GRADING PLANS, DRAINAGE IMPROVEMENTS, ROAD AND ACCESS REQUIREMENTS AND ENVIRONMENTAL HEALTH CONSIDERATIONS SHALL COMPLY WITH ALL LOCAL ORDINANCES.

13. ALL WORK SHALL CONFORM TO 2016 EDITION OF TITLE 24, CALIFORNIA CODE OF REGULATIONS (C.C.R.)

14. UNLESS SPECIFIED ON STRUCTURAL DRAWINGS, ANY ALTERATIONS OF MODIFICATIONS TO A STRUCTURAL ELEMENT BY CUTTING, DRILLING, BORING, BRACING, WELDING, ETC. SHALL HAVE WRITTEN APPROVAL BY THE STRUCTURAL ENGINEER OF RECORD AND D.S.A. PRIOR TO STARTING WORK.

15. FIRE BLOCKING AND DRAFT STOPS SHALL BE PROVIDED IN ACCORDANCE WITH CBC SECTION 708

16. A DSA ACCEPTED TESTING LABORATORY DIRECTLY EMPLOYED BY THE DISTRICT (OWNER) SHALL CONDUCT ALL THE REQUIRED TESTS AND INSPECTIONS FOR THE PROJECT

17. CONTRACTOR OPERATIONS SHALL NOT BLOCK, HINDER, IMPEDE OR OTHERWISE INHIBIT THE USE OF REQUIRED EXITS AT ANY TIME. CONTRACTOR SHALL MAINTAIN UNOBSTRUCTED ACCESS TO FIRE EXTINGUISHERS, FIRE HYDRANTS, TEMPORARY FIRE PROTECTION FACILITIES, STRAIRWAYS AND OTHER ACCESS ROUTES FOR FIRE-FIGHTING EQUIPMENT AND OR PERSONNEL

APPLICABLE CODES

ALL WORK ON THIS PROJECT SHALL COMPLY WITH THE CALIFORNIA CODE OF REGULATIONS (C.C.R.) TITLE 19, AND THE FOLLOWING PARTS OF TITLE 24:

PARTIAL LIST OF APPLICABLE CODES AS OF JANUARY 1, 2017

- 2019 CALIFORNIA ADMINISTRATIVE CODE, PART 1, TITLE 24 C.C.R.
- 2016 CALIFORNIA BUILDING CODE (C B C), PART 2, TITLE 24 C.C.R.
  (2015 INTERNATIONAL BUILDING CODE VOLUMES 1-2 AND 2016 CALIFORNIA AMENDMENTS)
- 2016 CALIFORNIA ELECTRICAL CODE (CEC), PART 3, TITLE 24 C.C.R.
  (2014 NATIONAL ELECTRICAL CODE AND 2016 CALIFORNIA AMENDMENTS)
- 2016 CALIFORNIA MECHANICAL CODE (CMC), PART 4, TITLE 24 C.C.R.
  (2015 UNIFORM MECHANICAL CODE AND 2016 CALIFORNIA AMENDMENTS)
- 2016 CALIFORNIA PLUMBING CODE (CPC), PART 5, TITLE 24 C.C.R.
  (2015 UNIFORM PLUMBING CODE AND 2016 CALIFORNIA AMENDMENTS)
- 2016 CALIFORNIA ENERGY CODE (CEC), PART 6, TITLE 24 C.C.R.
- 2016 CALIFORNIA FIRE CODE, PART 9, TITLE 24 C.C.R.
  (2015 INTERNATIONAL FIRE CODE AND 2016 CALIFORNIA AMENDMENTS)
- 2016 CALIFORNIA GREEN BUILDING STANDARDS CODE (CALGreen), PART 11, TITLE 24 C.C.R.
- 2016 CALIFORNIA REFERENCED STANDARDS, PART 12, TITLE 24 C.C.R.

TITLE 19, C.C.R., PUBLIC SAFETY, STATE FIRE MARSHAL REGULATIONS.
2013 ASME A17.1 SAFETY CODE FOR ELEVATORS AND ESCALATORS.

PARTIAL LIST OF APPLICABLE NFPA STANDARDS

NFPA 13	AUTOMATIC SPRINKLER SYSTEMS	2016 EDITION
NFPA 14	STANDPIPE AND HOSE SYSTEMS	2013 EDITION
NFPA 17	DRY CHEMICAL EXTINGUISHING SYSTEMS	2013 EDITION
NFPA 17A	WET CHEMICAL EXTINGUISHING SYSTEMS	2013 EDITION
NFPA 20	STATIONARY PUMPS FOR FIRE PROTECTION	2016 EDITION
NFPA 22	WATER TANKS FOR PRIVATE FIRE PROTECTION	2013 EDITION
NFPA 24	PRIVATE FIRE MAINS & THEIR APPURTENANCES	2016 EDITION
NFPA 25	STANDARD FOR INSPECTION, TESTING AND MAINTENANCE OF WATER-BASED FIRE PROTECTION SYSTEMS	2013 EDITION
NFPA 72	NATIONAL FIRE ALARM & SIGNALING CODE	2016 EDITION
NFPA 80	FIRE DOOR AND OTHER OPENING PROTECTIVES	2016 EDITION
NFPA 92	STANDARD FOR SMOKE CONTROL SYSTEMS	2015 EDITION
NFPA 253	CRITICAL RADIANT FLUX OF FLOOR COVERING SYSTEMS	2015 EDITION
NFPA 2001	CLEAN AGENT FIRE EXTINGUISHING SYSTEMS	2015 EDITION
ICC 300 ICC	STANDARDS ON BLEACHERS, FOLDING AND TELESCOPING	2012 EDITION
UL 300	FIRE TESTING OF FIRE EXTINGUISHING SYSTEMS FOR PROTECTION OF RESTAURANT COOKING AREAS	2005 EDITION
UL 464	AUDIBLE SIGNAL APPLIANCES	2003 EDITION
UL 521	HEAT DETECTORS FOR FIRE PROTECTIVE SIGNALING SYSTEMS	1999 EDITION

REFERENCE CODE SECTION FOR NFPA STANDARDS - 2016 CBC (SFM) CHAPTER 35.
SEE CHAPTER 35 FOR STATE OF CALIFORNIA AMENDMENTS TO NFPA STANDARDS.

SCOPE OF WORK

CONSTRUCTION OF 1 NEW FULLY SPRINKLERED CLASSROOM AND LIBRARY BUILDING WITH ASSOCIATED SITE AND UTILITY WORK; DEMOLITION OF (6) RELOCATABLE BUILDINGS AND RELATED SITE AND UTILITY WORK.
DEFERRED SUBMITTAL TO INCLUDE CURTAIN WALL SYSTEM

PROVIDE FIRE ALARM UPGRADES TO EXISTING SNACK BAR RELOCATABLE BUILDING.

TRANSLUCENT CANOPY SHALL BE SUBMITTED UNDER SEPARETE DSA APPLICATION NUMBER.

VICINITY MAP

CONSULTANTS

ELECTRICAL ENGINEER:
JOHNSON CONSULTING ENGINEEERS, INC
12875 BROOKPRINTER PLACE, SUITE 300
POWAY, CA 92064
OFFICE: (858) 679-4030

MECHANICAL ENGINEER:
PMPE CONSULTANTS
5755 OBERLIN DRIVE, SUITE 102
SAN DIEGO, CA 92121
OFFICE: (858) 642-0800

STRUCTURAL ENGINEER:
WELSH STRUCTURES, INC.
12722 BARRETT LN.
SANTA ANA, CA 92705
OFFICE: (714) 352-6297

FIRE PROTECTION ENGINEER:
SALAS O'BRIEN
1255 COLLIER RD.
ATLANTA, GA 30318
OFFICE: (404) 881-5300

LANDSCAPE ARCHITECT:
LIGHTFOOT PLANNING GROUP
5900 PASTEUR CT.
CARLSBAD, CA 92008
OFFICE: (760) 692-1924

CIVIL ENGINEER:
STUDIOWC
515 ENCINITAS BLVD., STE. 201
ENCINITAS, CA 92024
OFFICE: (760) 753-6800

INDEX OF DRAWINGS

Titlesheet
T1.1 TITLE SHEET
Civil
C1.0 CIVIL GENERAL NOTES AND LEGEND
C1.1 OVERALL CIVIL SITE PLAN
C1.2 SURVEY
C2.1 GRADING PLAN 1
C2.2 GRADING PLAN 2
C2.3 GRADING PLAN 3
C3.0 UTILITY DEMO PLAN
C3.1 UTILITY PLAN - AREA 1
C3.2 UTILITY PLAN - AREA 2
C3.3.1 UTILITY PLAN - AREA 3
C3.3.2 FIRE SERVICE DETAILS
C3.3.3 SEWER CONNECTION
C4.1 STORM DRAIN PLAN - AREA 1
C4.2 STORM DRAIN PLAN - AREA 2
C5.0 CIVIL DETAILS
C5.1 CIVIL DETAILS
C6.1 STORM WATER POLLUTION PLAN
Landscape
L-1.0 PARTIAL SITE PLAN
L-2.1 IRRIGATION PLAN
L-2.2 IRRIGATION PLAN
L-2.3 IRRIGATION PLAN
L-3.1 PLANTING PLAN
L-3.2 PLANTING PLAN
L-3.3 PLANTING PLAN
L-4.1 LANDSCAPE DETAILS
L-4.2 LANDSCAPE DETAILS
Architectural
A0.1 OVERALL SITE PLAN
A0.2 OVERALL FIRE ACCESS PLAN
A1.1 ENLARGED SITE PLAN- DEMO
A1.2 ENLARGED SITE PLAN- NEW
A1.3 ENLARGED PARKING PLAN
A1.4 ENLARGED FENCING & DIMENSION SITE PLAN
A2.1 DIMENSION FLOOR PLAN
A2.2 EXITING FLOOR PLAN
A2.3 OVERALL FLOOR PLAN
A2.4 ENLARGED FLOOR PLANS
A3.1 REFLECTED CEILING PLAN
A4.1 ROOF PLAN
A5.1 BUILDING ELEVATIONS
A5.2 EXTERIOR CORRIDOR ELEVATIONS
A6.1 BUILDING SECTIONS
A6.2 BUILDING SECTIONS
A6.3 BUILDING SECTIONS
A6.4 BUILDING SECTIONS
A7.1 INTERIOR ELEVATIONS
A7.2 INTERIOR ELEVATIONS
A7.3 INTERIOR ELEVATIONS
A7.4 INTERIOR ELEVATIONS
A7.5 INTERIOR ELEVATIONS- TOILET ROOMS
A8.1 DOOR & OPENING SCHEDULES
A9.1 ROOM FINISHES
A10.1 SITE DETAILS
A10.2 SITE DETAILS
A10.3 SITE DETAILS
A10.4 SITE DETAILS
A20.0 WALL TYPES AND DETAILS
A20.1 RR & SIGNAGE DETAILS
A20.2 INTERIOR DETAILS
A20.3 INTERIOR DETAILS
A30.1 RCP DETAILS
A30.2 RCP DETAILS
A40.1 ROOF DETAILS
A40.2 ROOF DETAILS
A50.1 EXTERIOR BUILDING DETAILS
A50.2 EXTERIOR BUILDING DETAILS
A60.1 WALL SECTIONS
A60.2 WALL SECTIONS
A60.3 WALL SECTIONS
A60.4 WALL SECTIONS
A60.5 WALL SECTIONS
A60.6 WALL SECTIONS
A60.7 WALL SECTIONS
A60.8 WALL SECTIONS
A60.9 WALL SECTIONS
A80.1 OPENING DETAILS
A80.2 OPENING DETAILS- CURTAIN WALL
Structural
S0.1 GENERAL NOTES
S1.1 TYPICAL CONCRETE DETAILS
S1.2 TYPICAL WOOD FRAMING DETAILS
S1.3 TYPICAL DETAILS
S1.4 TYPICAL DETAILS
S2.1 FOUNDATION PLAN
S3.1 BUILDING ELEVATIONS
S4.1 ROOF FRAMING PLAN
S5.1 FOUNDATION DETAILS
S6.1 FRAMING DETAILS
S6.2 FRAMING DETAILS
S6.3 FRAMING DETAILS
S6.4 FRAMING DETAILS
Mechanical
M0.1 MECHANICAL LEGEND, SYMBOLS & NOTES
M0.2 MECHANICAL EQUIPMENT SCHEDULES
M0.3 MECHANICAL EQUIPMENT SCHEDULES
M0.4 MECHANICAL TITLE 24
M2.1 MECHANICAL FLOOR PLAN
M4.1 MECHANICAL ROOF PLAN
M4.2 MECHANICAL SECTIONS
M4.3 MECHANICAL ISOMETRIC
M5.1 MECHANICAL DETAILS
M5.2 MECHANICAL DETAILS
M5.3 LIKN DETAILS AND SCHEDULE
M6.1 OVERALL CONTROL DIAGRAM
M6.2 PACKAGE UNIT CONTROL DIAGRAM
M6.3 PACKAGE UNIT CONTROL DIAGRAM
M6.4 CONTROL DIAGRAMS
M6.5 CONTROL DIAGRAMS
Plumbing
P0.1 PLUMBING LEGEND & GENERAL NOTES
P0.2 PLUMBING FIXTURE SCHEDULE
P1.1 PLUMBING SITE PLAN - GAS
P2.1 PLUMBING FLOOR PLAN (WATER & GAS)
P2.2 PLUMBING FLOOR PLAN (WASTE & VENT)
P3.1 ENLARGED PLUMBING PLANS (WATER & WASTE)
P3.2 ENLARGED PLUMBING PLANS (WASTE & VENT)
P4.1 PLUMBING ROOF PLAN
P4.2 ISOMETRIC DIAGRAM (GAS)
P4.3 ISOMETRIC DIAGRAMS (WATER & WASTE)
P5.1 PLUMBING DETAILS
P5.2 PLUMBING DETAILS
Electrical
E1.0 ELECTRICAL LEGEND AND NOTES
E1.1 OVERALL SITE PLAN
E1.2 SITE ELECTRICAL DETAILS
E2.0.0 TITLE 24
E2.1 LIGHTING FLOOR PLAN
E2.2 LIGHTING SCHEDULE AND DETAILS
E2.3 LIGHTING CONTROL DIAGRAMS
E2.4 LIGHTING DETAIL
E3.1 POWER FLOOR PLAN
E3.2 POWER DETAILS
E4.0 COMMUNICATION LEGEND & NOTES
E4.1 COMMUNICATIONS FLOOR PLAN
E4.2 COMMUNICATION RISER DIAGRAM AND DETAILS
E4.3 COMMUNICATION DETAILS
E4.4 COMMUNICATION DETAILS
E4.5 CLASSROOM AUDIO-VISUAL DETAILS
E4.6 CLASSROOM AUDIO-VISUAL DETAILS
E4.7 LIBRARY AUDIO-VISUAL DETAILS
E5.0 OVERALL FIRE ALARM SITE PLAN
E5.1 FIRE ALARM FLOOR PLAN
E5.2 FIRE ALARM SCHEDULES AND NOTES
E5.3 FIRE ALARM RISER AND CALCULATIONS
E6.1 ROOF PLAN
E6.2 MECHANICAL SCHEDULE
E7.1 ONE-LINE DIAGRAM
E7.2 ONE-LINE DETAILS
E8.1 ELECTRICAL DETAILS
E9.1 PANEL SCHEDULES
E10.1 DEMOLITION PLAN
Fire Protection
FP001 FIRE PROTECTION GENERAL
FP002 FIRE PROTECTION SITE PLAN
FP101 FIRE PROTECTION FLOOR PLAN
FP201 FIRE PROTECTION HEAD LAYOUT
FP301 FIRE PROTECTION ELEVATIONS
FP401 FIRE PROTECTION DETAILS
FP402 FIRE PROTECTION SEISMIC DETAILS

TOTAL SHEET COUNT: 154

IDENTIFICATION STAMP
DIV. OF THE STATE ARCHITECT
APP. 04-118693 INC:
REVIEWED FOR
SS ☑ FLS ☑ ACS ☑
DATE: 03.13.2020

Revison | Date

Consultant

Engineer

studiowc
ARCHITECTURE + ENGINEERING
515 Encinitas Blvd. Ste. 201, Encinitas, California 92024
Telephone: (760)753-6800 Fax: (760)452-7541

LICENSED ARCHITECT
ROBERT D. WEBB A.I.A.
C-28036
OCTOBER 31, 2021
STATE OF CALIFORNIA
Architect

CHET F. HARRITT ELEM. SCHOOL
LRC & CLASSROOM ADDITION
SANTEE SCHOOL DISTRICT

TITLE SHEET

Author

Checker

OCTOBER 18, 2019

Job:
SSD-CFH-05

T1.1

GENERAL NOTES

1. APPROVAL OF THESE PLANS BY THE DIVISION OF THE STATE ARCHITECT DOES NOT AUTHORIZE ANY WORK TO BE PERFORMED UNTIL ALL FORMS HAVE BEEN FILED AND THE BOX HAS BEEN OPENED BY THE ARCHITECT.

2. UPON COMMENCEMENT OF THE WORK, NO WORK WILL BE PERMITTED ON WEEKENDS OR HOLIDAYS UNLESS APPROVED BY THE SCHOOL DISTRICT.

3. THE APPROVAL OF THIS PLAN OR ISSUANCE OF A PERMIT BY THE DIVISION OF THE STATE ARCHTIECT DOES NOT AUTHORIZE THE PERMIT HOLDER OR OWNER TO VIOLATE ANY FEDERAL, STATE OR CITY LAWS, ORDINANCES, REGULATIONS, OR POLICIES.

4. IMPORTANT NOTICE: SECTION 4216 OF THE GOVERNMENT CODE REQUIRES A DIG ALERT IDENTIFICATION NUMBER ISSUED BEFORE A ''PERMIT TO EXCAVATE" WILL BE VALID. FOR YOUR DIG ALERT I.D. NUMBER, CALL UNDERGROUND SERVICE ALERT, TOLL FREE (800) 422-4133, TWO DAYS BEFORE YOU DIG.

5. CONTRACTOR SHALL BE RESPONSIBLE FOR POTHOLING AND LOCATING ALL EXISTING UTILITIES THAT CROSS THE PROPOSED TRENCH LINE WHILE MAINTAINING A 1 FOOT VERTICAL CLEARANCE.

6. IF THE CONTRACTOR DAMAGES ANY UTILITY, EITHER NOTED OR UNNOTED, THEY SHALL REPAIR THEM BACK TO CURRENT CODE AT NO ADDITOINAL COST TO THE OWNER.

7. DEVIATIONS FROM THESE SIGNED PLANS WILL NOT BE ALLOWED UNLESS A CONSTRUCTION CHANGE IS APPROVED BY THE DIVISION OF THE STATE ARCHITECT OR THE CHANGE IS REQUIRED BY THE DESIGN ENGINEER.

8. CONTRACTOR SHALL REPLACE OR REPAIR ALL ASPHALT, CONCRETE, SIGNS, LIGHTS, BUILDINGS, CONDUITS, AND STRIPING DAMAGED DURING CONSTRUCTION.

9. PRIOR TO SITE DISTURBANCE, CONTRACTOR SHALL MAKE ARRANGEMENTS FOR A PRECONSTRUCTION MEETING WITH THE CONSTRUCTION MANAGER, ARCHITECT, AND ENGINEER OF RECORD.

10. CONTRACTOR SHALL ONLY PERFORM SITE SURVEY AND UTILITY MARK OUT SERVICES PRIOR TO THE PRECONSTRUCTION MEETING.

11. CONTRACTOR SHALL IMPLEMENT AN EROSION CONTROL PROGRAM DURING THE PROJECT CONSTRUCTION ACTIVITIES. THE PROGRAM SHALL COMPLY WITH ALL APPLICABLE REQUIREMENTS OF THE STATE WATER RESOURCE CONTROL BOARD.

12. CONTRACTOR SHALL HAVE EMERGENCY MATERIAL AND EQUIPMENT ON HAND FOR UNFORESEEN SITUATIONS, SUCH AS DAMAGE TO UNDERGROUND WATER, SEWER, AND STORM DRAIN FACILITIES WHERE FLOW MAY GENERATE EROSION AND SEDIMENT POLLUTION.

13. AN AS-GRADED GEOTECHNICAL REPORT AND SET OF THE REDLINE "AS-BUILT" GRADING PLANS SHALL BE SUBMITTED THE ENGINEER OF RECORD WITHIN 30 CALENDAR DAYS OF THE COMPLETION OF GRADING AND PRIOR TO BEGINNING THE FOUNDATIONS FOR THE BUILDING.

14. "AS-BUILT" DRAWINGS MUST BE SUBMITTED TO THE ENGINEER OF RECORD PRIOR TO ACCEPTANCE OF THIS PROJECT BY THE DISTRICT

15. MANHOLES AND PULL BOX COVER SHALL BE LABELED WITH NAME OF COMPANY OF MANUFACTURER AND THE UTILITY WHICH THEY SERVE.

16. CONTRACTOR SHALL PROVIDE DIGITAL AS-BUILT DRAWINGS IN ACCORDANCE WITH THE SPECIFICATIONS."

17. CONTRACTOR SHALL MAINTAIN A MINIMUM OF 1 FOOT VERTICAL SEPARATION TO ALL UTILITIES UNLESS OTHERWISE SPECIFIED ON THE PLANS.

18. CONTRACTOR SHALL REMOVE AND REPLACE ALL UTILITY BOXES SERVING AS HANDHOLES THAT ARE NOT IN "AS-NEW" CONDITION IN PROPOSED SIDEWALK, DAMAGED BOXES, OR THOSE THAT ARE NOT IN COMPLIANCE WITH CURRENT CODE SHALL BE REMOVED AND REPLACED WITH NEW BOXES, INCLUDING WATER, SEWER, STREET LIGHTS, DRY UTILITIES-SDG&E, COX, ETC. ALL NEW METAL LIDS SHALL BE SLIP RESISTANT AND INSTALLED FLUSH WITH PROPOSED SIDEWALK GRADE. IF A SLIP RESISTANT METAL LID IS NOT COMMERCIALLY AVAILABLE FOR THAT USE, NEW BOXES AND LIDS SHALL BE INSTALLED.

19. THE AREA WHICH IS DEFINED AS A NON GRADING AREA AND WHICH IS NOT TO BE DISTURBED SHALL BE STAKED PRIOR TO START OF THE WORK. THE PERMIT APPLICANT AND ALL OF THEIR REPRESENTATIVES OR CONTRACTORS SHALL COMPLY WITH THE REQUIREMENTS FOR PROTECTION OF THIS AREA AS REQUIRED BY ANY APPLICABLE AGENCY. ISSUANCE OF THE CITY'S GRADING PERMIT SHALL NOT RELIEVE THE APPLICANT OR ANY OF THEIR REPRESENTATIVES OR CONTRACTORS FROM COMPLYING WITH ANY STATE OR FEDERAL REQUIREMENTS BY AGENCIES INCLUDING BUT NOT LIMITED TO CALIFORNIA REGIONAL WATER QUALITY CONTROL BOARD, CALIFORNIA DEPARTMENT OF FISH AND GAME. COMPLIANCE MAY INCLUDE OBTAINING PERMITS, OTHER AUTHORIZATIONS, OR COMPLIANCE WITH MANDATES BY ANY APPLICABLE STATE OR FEDERAL AGENCY.

20. PRIOR TO CONSTRUCTION, SURVEY MONUMENTS (HORIZONTAL AND VERTICAL) THAT ARE LOCATED IN THE CONSTRUCTION AREA SHALL BE TIED-OUT AND REFERENCED BY A LICENSED LAND SURVEYOR.

21. LICENSED LAND SURVEYOR SHALL BE SUBMITTED TO ENGINEER OF RECORD A MINIMUM OF 30 DAYS PRIOR TO BEGINNING GRADING. ALL CURBS, FLOORS, WALLS, FENCES, SIDEWALKS AND ANY OTHER SITE IMPROVEMENT NOTED ON THESE SITE PLANS SHALL BE LAID OUT AND STAKED BY THE APPROVED LICENSED LAND SURVEYOR. IF SUBCONTRACTORS USE THEIR OWN STAFF FOR LAYOUT, ALL GRADES, FORMS, ETCS. SHALL BE CHECKED AND CERTIFIED BY A LICENSED LANDSURVEYOR.

21. UPON COMPLETION OF CONSTRUCTION, ALL DESTROYED SURVEY MONUMENTS ARE REQUIRED TO BE REPLACED, AND A CORNER RECORD OR RECORD OF SURVEY SHALL BE PREPARED AND FILED WITH THE COUNTY SURVEYOR AS REQUIRED BY THE PROFESSIONAL LAND SURVEYOR ACT, SECTION 8771 OF THE BUSINESS AND PROFESSIONS CODE OF THE STATE OF CALIFORNIA.

CIVIL LEGEND

	(N) DECOMPOSED GRANITE
	(N) CONCRETE/SIDEWALK - DEPTH AND REINFORCING AS NOTED
	(N) ACCENT SAND BLAST FINISH CONCRETE/SIDEWALK - DEPTH AND REINFORCING AS NOTED
	(N) 6" CONC. CURB
	(N) 6" CONC. CURB AND GUTTER
	(N) CONSTRUCTION/EXPANSION JOINTS - PATTERN AS SHOWN ON PLANS
	GRADE BREAK/HP LINE
	(N) ASPHALT - DEPTH PER SOILS REPORT
	(N) 12" CATCH BASIN
	(N) 18" CATCH BASIN
	(N) 24" CATCH BASIN
	(N) SAN DIEGO REGIONAL STANDARDS - CURB INLET TYPE C
	(N) TRENCH DRAIN - ACO DRAIN FLOW DRAIN FG200 - WITH LONGITUDINAL ADA/HEEL PROOF GRATES - LOAD CLASS EN 1433 OR EQUAL
	(N) CHAIN LINK FENCE
	(N) 2' WIDE SWALE
	(N) 15" CONCRETE BENCH WALL
	(N) RETAINING WALL - HT AS NOTED
47.4 FS	(N) ELEVATION MARKER
(47.4 FS)	(E) ELEVATION MARKER/MATCH NEW WORK TO EXISTING
S	(N) SANITARY SEWER LINE - SIZE AS NOTED
SD	(N) STORM SEWER LINE - SIZE AS NOTED
F	(N) FIRE WATER - SIZE AS NOTED
FS	(N) FIRE SERVICE LINE - SIZE AS NOTED
G	(N) GAS LINE - SEE PLUMBING
W	(N) DOMESTIC WATER LINE - SIZE AS NOTED
TA	TOP OF ASPHALT
TC	TOP OF CURB
TG	TOP OF STORM DRAIN/CURB INLET GRATE
TW	TOP OF WALL
BW	BOTTOM OF WALL AT GRADE
FS	FINISH SURFACE - SIDEWALK/CONCRETE
LA	LANDSCAPE AREA
FG	FINISH FINISH GRADE- EARTH/DG/LA
IE	INVERT ELEVATION
FV	FIELD VERIFY - SURVEYOR TO FIELD VERIFY ELEVATION AND REPORT TO PROJECT ENGINEER
ME	MATCH EXISTING
TP	TOP OF PIPE
IRB ELB WB	IRRIGATON/ELECTRICAL BOX/WATER BOX
353.51 FS × 352.91	EXISTING ELEVATION - BASE SURVEY
(357)	EXISTING CONTOUR - BASE SURVEY

IDENTIFICATION STAMP
DIV. OF THE STATE ARCHITECT
APP. 04-118693 INC:
REVIEWED FOR
SS ☑ FLS ☑ ACS ☑
DATE: 03.13.2020

Revison	Date

Consultant

Engineer

studiowc
ARCHITECTURE + ENGINEERING
515 Encinitas Blvd, Ste. 201 Encinitas, California 92024
Telephone: (760) 634-8880 Fax: (760)452-7541

LICENSED ARCHITECT
ROBERT D. WEBB
C-28036
OCTOBER 31, 2021
STATE OF CALIFORNIA

CHET F. HARRITT ELEM. SCHOOL
LRC & CLASSROOM ADDITION
SANTEE SCHOOL DISTRICT

CIVIL GENERAL NOTES AND LEGEND

Drawn: Author
Checked: Checker
Date: OCTOBER 18, 2019
Job: SSD-CFH-05

C1.0

OVERALL CIVIL SITE PLAN | 1" = 30'-0" | 1

IDENTIFICATION STAMP
DIV. OF THE STATE ARCHITECT
APP. 04-118693 INC:
REVIEWED FOR
SS ☑ FLS ☑ ACS ☑
DATE: 03.13.2020

Revison	Date

Consultant

Engineer

studiowc
ARCHITECTURE + ENGINEERING
515 Encinitas Blvd, Ste 201, Encinitas, California 92024
Telephone: (760) 632-8800 Fax: (760) 452-7541

LICENSED ARCHITECT
ROBERT D. WEBB
R.D. Webb
C-28036
OCTOBER 31, 2021
STATE OF CALIFORNIA

CHET F. HARRITT ELEM. SCHOOL
LRC & CLASSROOM ADDITION
SANTEE SCHOOL DISTRICT

OVERALL CIVIL SITE PLAN

Drawn: Author
Checked: Checker
Date: OCTOBER 18, 2019
Job: SSD-CFH-05

C1.1

TOPOGRAPHIC SURVEY

LEGEND AND ABBREVIATIONS

- CENTERLINE
- PROPERTY LINE
- RIGHT OF WAY
- CONTOUR
- CURB & GUTTER
- FENCES AS NOTED
- FLOWLINE/CREEK/STREAM
- WALL AS NOTED
- ELECTRIC LINE
- GAS LINE
- FIRE SERVICE LINE
- OVERHEAD ELECTRIC
- SEWER LINE
- STORMDRAIN LINE
- TELEPHONE LINE
- WATER LINE
- AC ASPHALTIC CONCRETE
- AREA DRAIN
- BACK FLOW PREVENTER
- CONC CONCRETE
- DEPRESSION
- DOOR
- DF DRINKING FOUNTAIN
- ELB ELECTRICAL BOX
- EHH ELECTRIC HAND HOLE
- FF FINISH FLOOR
- FG FINISHED GRADE
- FS FINISHED SURFACE
- FR FIRE RISER
- FH FIRE HYDRANT
- FL FLOW LINE
- GB GAS BOX
- GV GAS VALVE
- GL GROUND LIGHT
- GP GUARD POST
- GUY WIRE
- HH HAND HOLE
- HB HOSE BIB
- IE INVERT ELEVATION
- IRB IRRIGATION BOX
- IRV IRRIGATION VALVE
- LA LANDSCAPE
- MANHOLE(TELE,STORM,SEWER)
- METER(GAS/ELECTRIC/WATER)
- OBS OBSTRUCTION
- OHU OVERHEAD UTILITY
- PP POWER POLE
- RD ROOF DRAIN
- SIGN
- SCO SEWER CLEAN OUT
- STREET LIGHT
- TR TELEPHONE RISER
- XFMR TRANSFORMER
- TC TOP OF CURB
- TE TRASH ENCLOSURE
- (TYP) TYPICAL
- VEGETATION (TREE/PALM)
- WB WATER BOX
- WV WATER VALVE
- YL YARD LIGHT

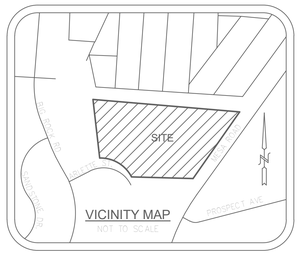

BASIS OF BEARINGS

THE BASIS OF BEARINGS FOR THIS SURVEY IS A LINE BETWEEN POINT #1006 AND POINT #1005 AS SHOWN ON RECORD OF SURVEY 11252.

BEING: N17° 50'14"W

BENCHMARK

POINT #2044 AS SHOWN ON RECORD OF SURVEY 11252.

STANDARD STREET SURVEY MONUMENT STAMPED RCE 23909 PER MAP 9902, CENTERLINE OF SETTLE ROAD 5' SOUTHWESTERLY OF THE CENTERLINE OF GANLEY ROAD.

ELEVATION: 464.51' (M.S.L.D.)

NOTES

TOPOGRAPHY FOR THIS SURVEY IS BASED ON AERIAL SURVEY DONE BY INLAND AERIAL SURVEY ON MARCH 22, 2019 & SUPPLEMENTED WITH CONDITIONAL TOPOGRAPHY DONE BY ATC DESIGN GROUP ON MAY 28, 2019.

SCALE: 1" = 20'

THIS SURVEY WAS PREPARED BY ME OR UNDER MY DIRECTION ON MAY, 2019.

LICENSED LAND SURVEYOR RYAN A. POST No. 8785 STATE OF CALIFORNIA

JUNE 13, 2019

RYAN A. POST, LS 8785 DATE

REVISIONS

NO.	DESCRIPTION	DATE	APP'D

ATC DESIGN GROUP
ARCHITECTS ENGINEERS SURVEYORS
1282 PACIFIC OAKS PL., SUITE C ESCONDIDO, CA 92029
PHONE: (760) 738-8800 FAX: (760) 738-8232

DATE: 06.13.2019
SCALE: 1" = 20'
DRAWN: A.POST
CHECKED: R.POST

SHEET TITLE: TOPOGRAPHIC SURVEY

PROJECT: CHET HARRIOT ELEMENTARY SCHOOL
8120 ARLETE ST.
SANTEE, CA 92071

SHEET 1 OF 4 SHEETS

DATE: 7/23/2019 - FILE NAME: X:\Projects\SSD\Chet Harrit\SSD-CH-05\CLASSROOM ADDITION AND LRC\BIM\Survey\Chet Survey 06142019\19-3916 G-TS - CSD\TBD-19-3916 G-TS-v2topsvkm.dwg

IDENTIFICATION STAMP
DIV. OF THE STATE ARCHITECT
APP. 04-118693 INC:
REVIEWED FOR
SS ☑ FLS ☑ ACS ☑
DATE: 03.13.2020

Revison	Date

Consultant

Engineer

studiowc
ARCHITECTURE + ENGINEERING
515 Encinitas Blvd, Ste. 201, Encinitas, California 92024
Telephone: (760)753-6800 Fax: (760)452-7541

LICENSED ARCHITECT
ROBERT D. WEBB AIA
C-28036
OCTOBER 31, 2021
STATE OF CALIFORNIA

CHET F. HARRITT ELEM. SCHOOL
LRC & CLASSROOM ADDITION
SANTEE SCHOOL DISTRICT

SURVEY

Drawn: Author
Checked: Checker
Date: OCTOBER 18, 2019
Job: SSD-CFH-05

C1.2

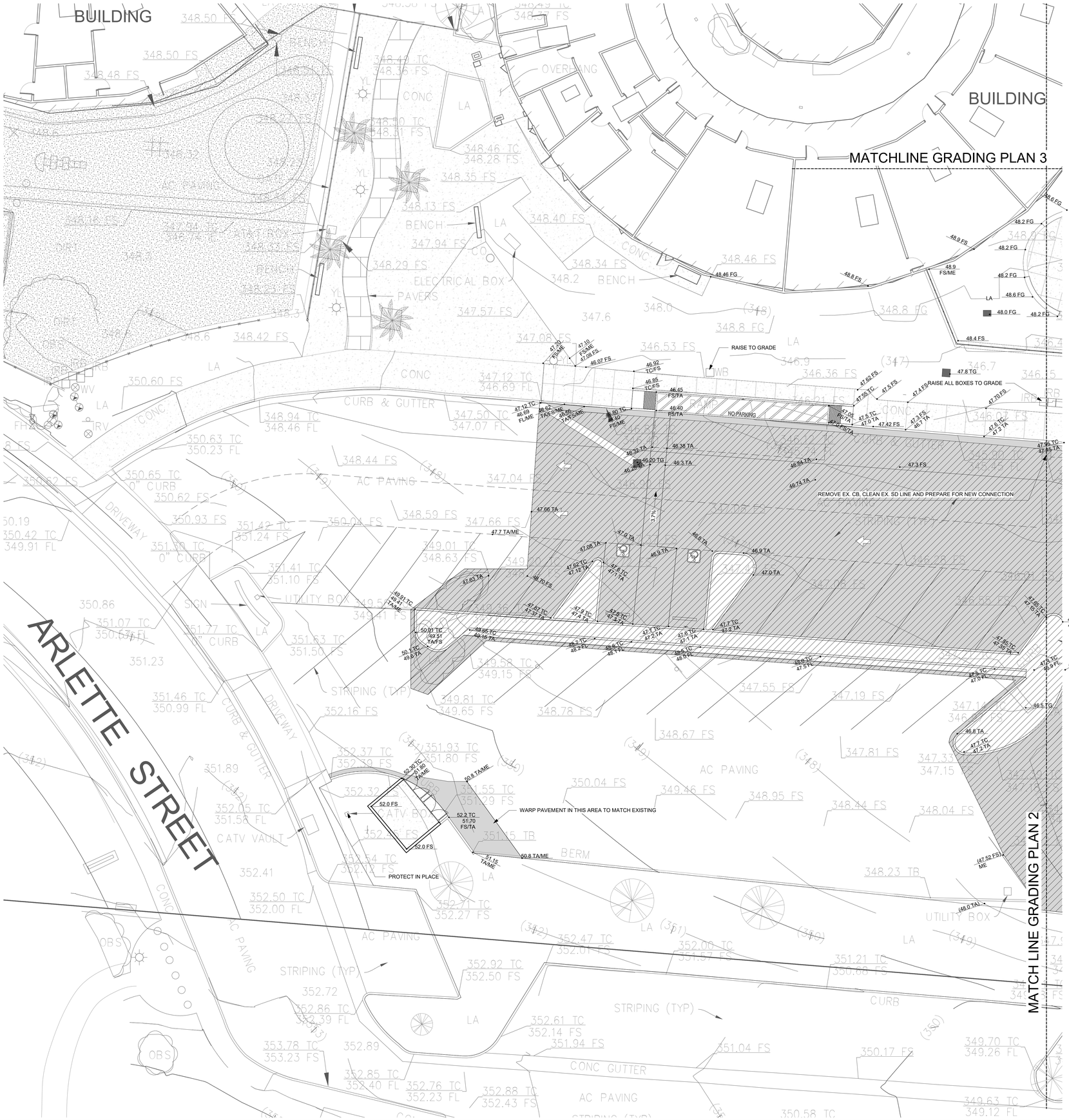

IDENTIFICATION STAMP
DIV. OF THE STATE ARCHITECT
APP. 04-118693 INC:
REVIEWED FOR
SS ☑ FLS ☑ ACS ☑
DATE: 03.13.2020

Revison	Date

Consultant

Engineer

studiowc
ARCHITECTURE + ENGINEERING
515 Encinitas Blvd, Ste 201, Encinitas, California 92024
Telephone: (760) 632-8800 Fax: (760) 452-7341

LICENSED ARCHITECT
ROBERT D. WEBB
C-28036
OCTOBER 31, 2021
STATE OF CALIFORNIA

CHET F. HARRITT ELEM. SCHOOL
LRC & CLASSROOM ADDITION
SANTEE SCHOOL DISTRICT

GRADING PLAN 1

Drawn: Author
Checked: Checker
Date: OCTOBER 18, 2019
Job: SSD-CFH-05

C2.1

GRADING PLAN 1 | 1" = 10'-0" | 1

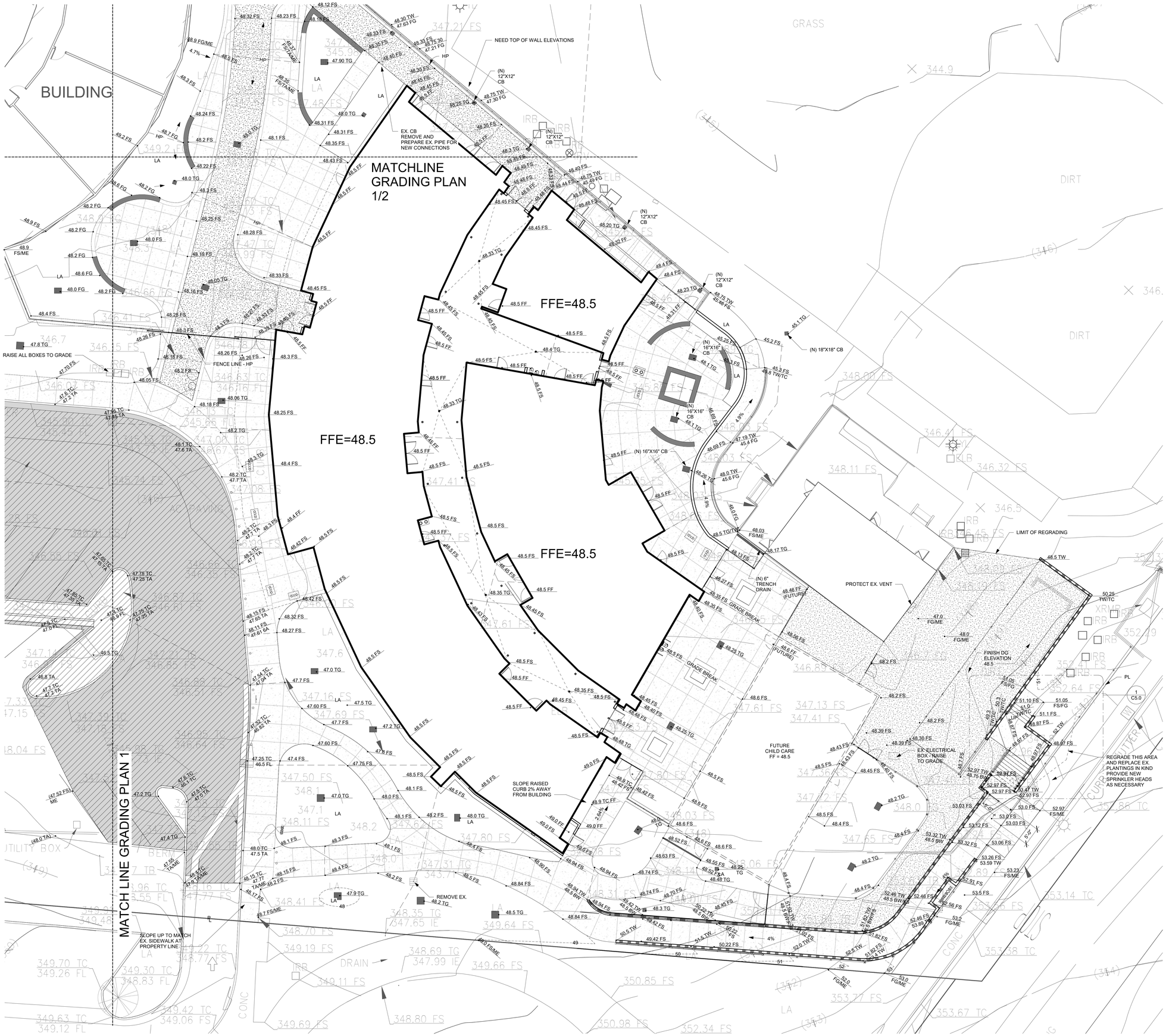

GRADING PLAN 2 | 1" = 10'-0" | 1

IDENTIFICATION STAMP
DIV. OF THE STATE ARCHITECT
APP. 04-118693 INC:
REVIEWED FOR
SS ☑ FLS ☑ ACS ☑
DATE: 03.13.2020

Revison	Date

Consultant

Engineer

studiowc
ARCHITECTURE + ENGINEERING
515 Encinitas Blvd, Ste. 201, Encinitas, California 92024
Telephone: (760)753-6800 Fax: (760)452-7541

LICENSED ARCHITECT
ROBERT D. WEBB AIA
C-28036
OCTOBER 31, 2021
STATE OF CALIFORNIA

CHET F. HARRITT ELEM. SCHOOL
LRC & CLASSROOM ADDITION
SANTEE SCHOOL DISTRICT

GRADING PLAN 2

Drawn: Author
Checked: Checker
Date: OCTOBER 18, 2019
Job: SSD-CFH-05

C2.2

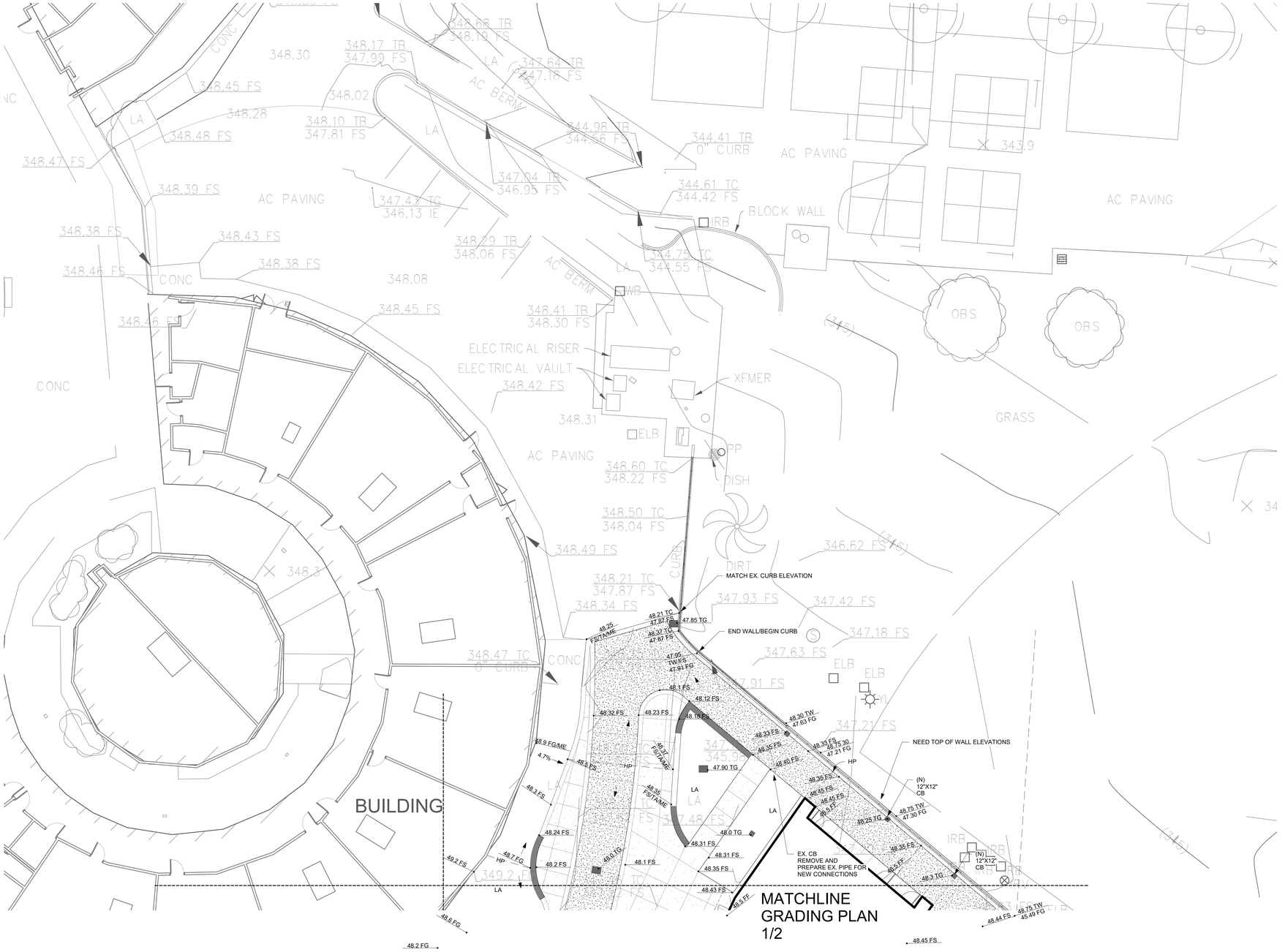

IDENTIFICATION STAMP
DIV. OF THE STATE ARCHITECT
APP: 04-118693 INC:
REVIEWED FOR
SS ☑ FLS ☑ ACS ☑
DATE: 03.13.2020

Revison	Date

Consultant

Engineer

studiowc
ARCHITECTURE + ENGINEERING
515 Encinitas Blvd, Ste. 201, Encinitas, California 92024
Telephone: (760) 632-8800 Fax: (760) 452-7541

LICENSED ARCHITECT
ROBERT D. WEBB
R.D. Webb
C-28036
OCTOBER 31, 2021
STATE OF CALIFORNIA

CHET F. HARRITT ELEM. SCHOOL
LRC & CLASSROOM ADDITION
SANTEE SCHOOL DISTRICT

GRADING PLAN 3

Drawn: Author
Checked: Checker
Date: OCTOBER 18, 2019
Job: SSD-CFH-05

C2.3

UTILITY GENERAL NOTES:

1. EXISTING SD WITHIN FOOTPRINT OF BUILDING SHALL BE REMOVED, COMPLETE
2. EXISTING WATER LINE WITHIN FOOTPRINT OF BUILDING SHALL BE REMOVED, COMPLETE.
3. EXISTING SEWER WITHIN FOOTPRINT OF BUILDING SHALL BE REMOVED, COMPLETE.
4. ALL EXISTING DATA, LOW VOLTAGE, AND ELECTRICAL WITHIN FOOTPRINT OF BUILDING SHALL BE REMOVED, COMPLETE.
5. COORDINATE WITH ALL NEW PLANS FOR ANY UTILITIES FOR EXISTING BUILDINGS TO REMAIN. COORDINATE WITH LLB CONTRACTOR FOR PHASING.
6. PROTECT ALL RECYCLED IRRIGATION IN PLACE, UNLESS OTHERWISE NOTED ON IRRIGATION PLANS.
7. REMOVE AND CAP ALL IRRIGATION WATER OR POTABLE IRRIGATION WATER WITHIN FOOTPRINT OF THE BUILDING.
8. CONTRACTOR SHALL POTHOLE ALL UTILITIES AND IDENTIFY ALL POINTS OF CONNECTION. ONCE POC'S ARE LOCATED, INSPECTOR, LLB CONTRACTOR AND PROJECT ENGINEER SHALL BE GIVEN THE ABILITY TO INSPECT EACH EXCAVATION AND POC.

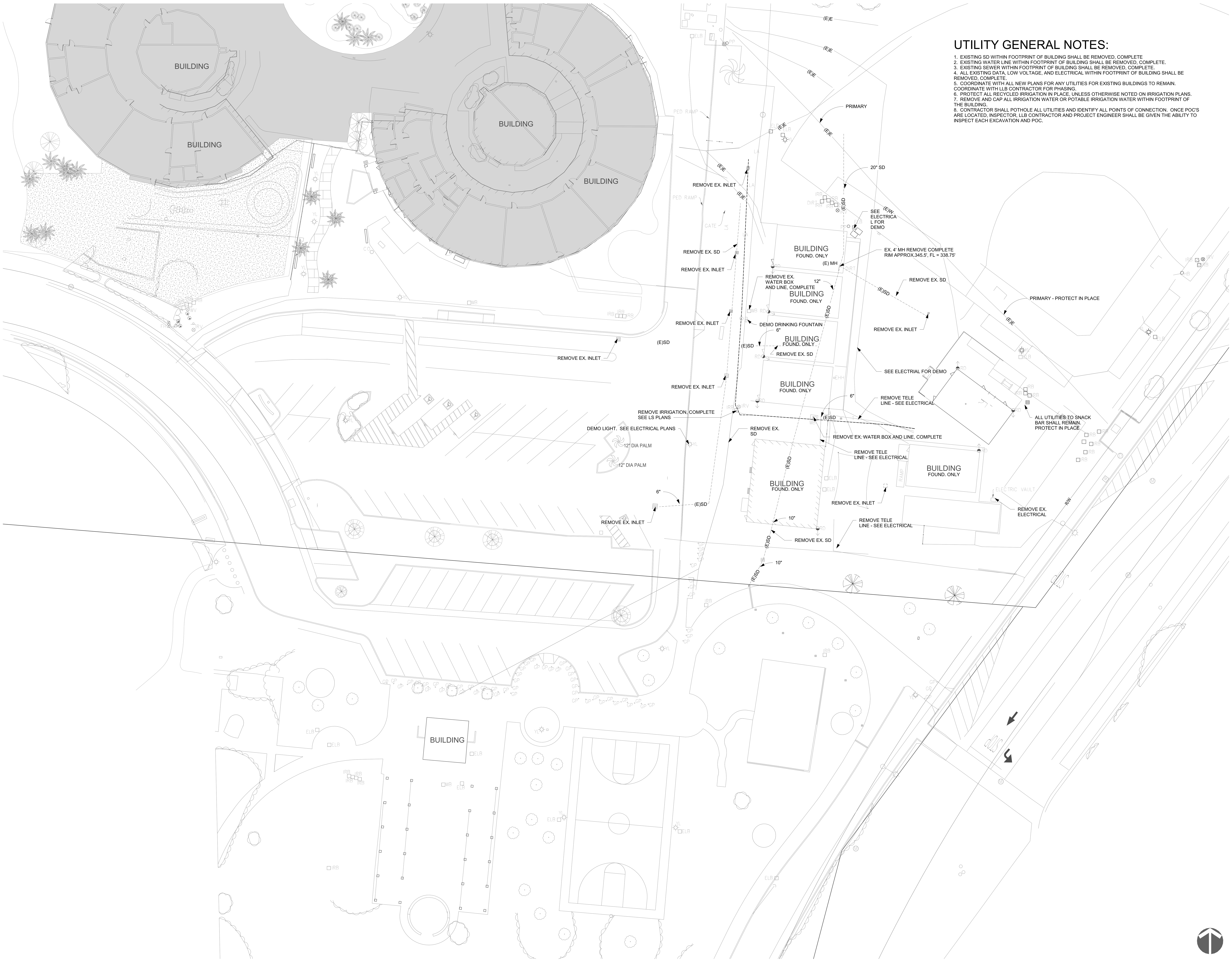

IDENTIFICATION STAMP
DIV. OF THE STATE ARCHITECT
APP. 04-118693 INC:
REVIEWED FOR
SS ☑ FLS ☑ ACS ☑
DATE: 03.13.2020

Date
Revison
Consultant
Engineer

REGISTERED PROFESSIONAL ENGINEER DEBRA S. VAUGHAN-CLIFF 62788 JUNE 30, 2020 STATE OF CALIFORNIA

studioWC
ARCHITECTURE + ENGINEERING
515 Encinitas Blvd. Ste. 201, Encinitas, California 92024
Telephone: (760)753-6800 Fax: (760)452-7541

LICENSED ARCHITECT ROBERT D. WEBB A.I.A. C-28036 OCTOBER 31, 2021 STATE OF CALIFORNIA

CHET F. HARRITT ELEM. SCHOOL
LRC & CLASSROOM ADDITION
SANTEE SCHOOL DISTRICT

UTILITY DEMO PLAN

Drawn: Author
Checked: Checker
Date: OCTOBER 18, 2019
Job: SSD-CFH-05

C3.0

UTILITY DEMO PLAN 1" = 20'-0" 1

UTILITY LEGEND

S	(N) PVC SEWER LINE - SIZE AS INDICATED
(E) S	(E) 8" SEWER LINE (VCP) TO REMAIN - PROTECT
(E) S	(E) 8" SEWER LINE (VCP) TO BE REMOVED
W	(N) 2" SCHEDULE 80 WATER LINE
F	(N) 6" FIRE SERVICE LINE
F	(N) 6" FIRE SERVICE LINE IN PUBLIC RW W/ TRENCH RESURFACING
MH	EXISTING MANHOLE TO REMAIN OR REMOVED AS NOTED
CO DCO	(N) 4" CLEAN OUT OR DOUBLE CLEAN OUT
	(N) THRUST BLOCK

UTILITY NOTES

1. CONNECT NEW 6" FIRE LINE TO EXISTING 16" WATER LINE IN MESA STREET. SEE OFF SITE PLANS. CONNECTION TO MAIN SHALL BE PERFORMED BY PADRE DAM MUNICIPAL WATER DISTRICT. CONTRACTOR SHALL PROVIDE NEW DOUBLE DETECTOR CHECK AND CONNECT TO NEW FS STUB. CONTRACTOR SHALL OBTAIN ENCROACHMENT PERMIT FROM CITY OF SANTEE AND PERMIT FROM PADRE DAM. INSTALLATION SHALL BE IN ACCORDANCE WITH PADRE DAM'S STANDARD DRAWINGS AND SPECIFICATIONS. SIDEWALK REPAIR SHALL BE IN ACCORDANCE WITH CITY OF SANTEE STANDARD DRAWINGS AND SPECIFICATIONS. CONTRACTOR IS RESPONSIBLE FOR PREPARATION OF ALL TRAFFIC PLANS AS REQUIRED BY THE CITY OF SANTEE.

2. SEE SEWER WATER SEPARATION NOTES 3/C5.1.

3. AFTER INSTALLATION OF SEWER AND STORM SEWER IN FIELD, CONTRACTOR SHALL RESOD.

4. HAND DIG ALL STORM DRAIN AND SEWER IN FIELD AREA TO AVOID EXISTING IRRIGATION. THREAD PIPES UNDER EXISTING IRRIGATION TO PRESERVE.

5. SAWCUT ASPHALT HARDCOURTS (APPROX. 3"-4") AND REMOVE. PATCH AFTER INSTALLATION OF NEW SEWER. SEAL COAT ALL HARDCOURT AREA AND RESTRIPE.

UTILITY KEY NOTES

U3	POTHOLE AND LOCATE IRRIGATION. LOWER ALL IRRIGATION LINES IN VICINITY OF NEW DOMESTIC WATER LINE. MAINTAIN 10' DISTANCE FROM ANY PARALLEL IRRIGATION LINE AND A MINIMUM OF 2' ABOVE ANY IRRIGATION LINES. REINSTALL IRRIGATION BOXES. COORDINATE WITH DISTRICT REPRESENTATIVE.

IDENTIFICATION STAMP
DIV. OF THE STATE ARCHITECT
APP. 04-118693 INC:
REVIEWED FOR
SS ☑ FLS ☑ ACS ☑
DATE: 03.13.2020

Revison	Date

Consultant

Engineer

studiowc
ARCHITECTURE + ENGINEERING
515 Encinitas Blvd, Ste 201, Encinitas, California 92024
Telephone: (760) 634-8800 Fax: (760) 452-7541

LICENSED ARCHITECT
ROBERT D. WEBB
C-28036
OCTOBER 31, 2021
STATE OF CALIFORNIA

CHET F. HARRITT ELEM. SCHOOL
LRC & CLASSROOM ADDITION
SANTEE SCHOOL DISTRICT

UTILITY PLAN - AREA 1

Drawn: Author
Checked: Checker
Date: OCTOBER 18, 2019
Job: SSD-CFH-05

C3.1

UTILITY PLAN - AREA 1 | 1" = 10'-0" | 1

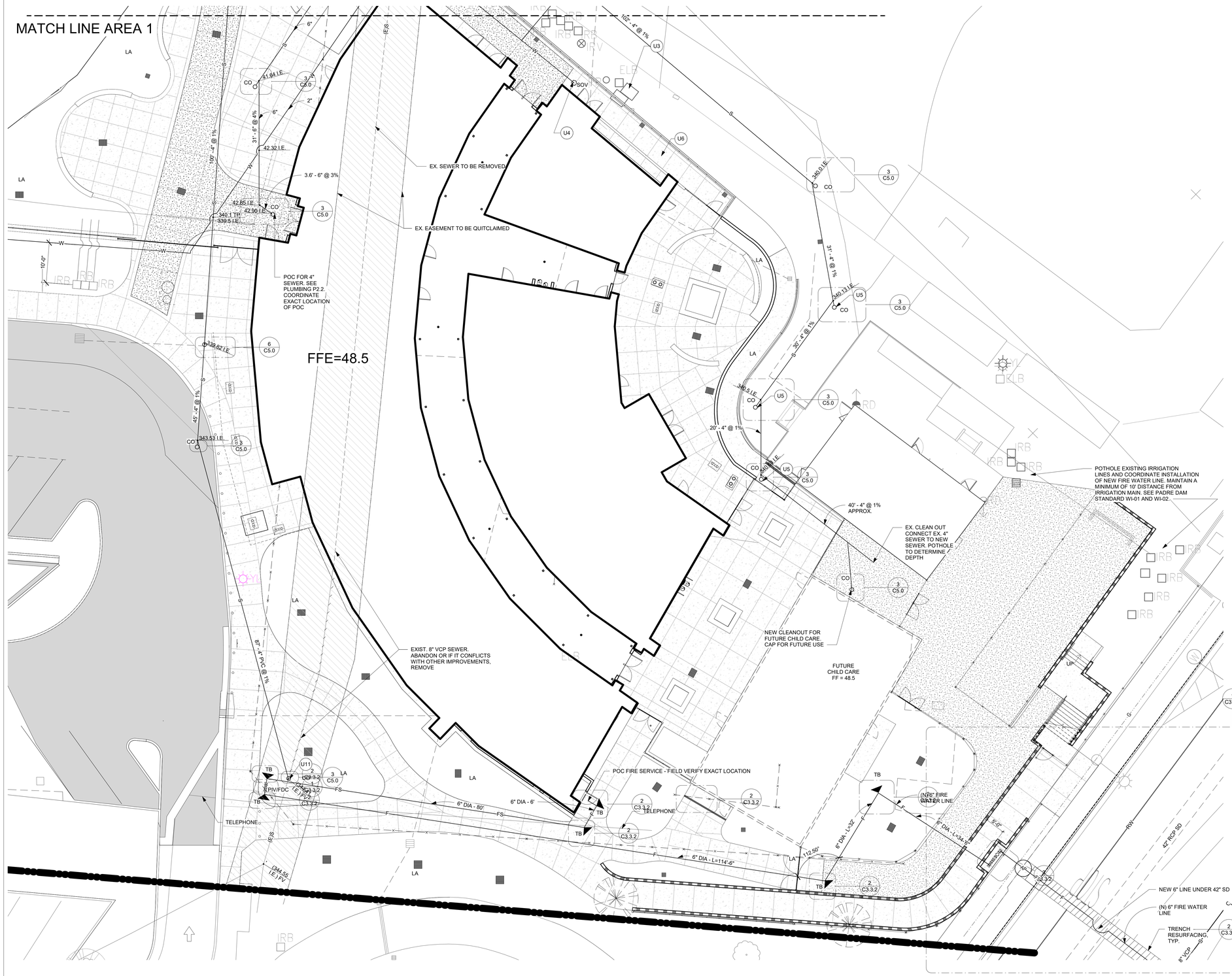

UTILITY LEGEND

——S——	(N) PVC SEWER LINE - SIZE AS INDICATED
——(E) S——	(E) 8" SEWER LINE (VCP) TO REMAIN - PROTECT
——(E) S——	(E) 8" SEWER LINE (VCP) TO BE REMOVED
——W——	(N) 2" SCHEDULE 80 WATER LINE
——F——	(N) 6" FIRE SERVICE LINE
——F——	(N) 6" FIRE SERVICE LINE IN PUBLIC RW W/ TRENCH RESURFACING
(MH)	EXISTING MANHOLE TO REMAIN OR REMOVED AS NOTED
CO CO DCO	(N) 4" CLEAN OUT OR DOUBLE CLEAN OUT
	(N) THRUST BLOCK

UTILITY NOTES

1. CONNECT NEW 6" FIRE LINE TO EXISTING 16" WATER LINE IN MESA STREET. SEE OFF SITE PLANS. CONNECTION TO MAIN SHALL BE PERFORMED BY PADRE DAM MUNICIPAL WATER DISTRICT. CONTRACTOR SHALL PROVIDE NEW DOUBLE DETECTOR CHECK AND CONNECT TO NEW FS STUB. CONTRACTOR SHALL OBTAIN ENCROACHMENT PERMIT FROM CITY OF SANTEE AND PERMIT FROM PADRE DAM. INSTALLATION SHALL BE IN ACCORDANCE WITH PADRE DAM'S STANDARD DRAWINGS AND SPECIFICATIONS. SIDEWALK REPAIR SHALL BE IN ACCORDANCE WITH CITY OF SANTEE STANDARD DRAWINGS AND SPECIFICATIONS. CONTRACTOR IS RESPONSIBLE FOR PREPARATION OF ALL TRAFFIC PLANS AS REQUIRED BY THE CITY OF SANTEE.

2. SEE SEWER WATER SEPARATION NOTES 3/C5.1.

3. AFTER INSTALLATION OF SEWER AND STORM SEWER IN FIELD, CONTRACTOR SHALL RESOD.

4. HAND DIG ALL STORM DRAIN AND SEWER IN FIELD AREA TO AVOID EXISTING IRRIGATION. THREAD PIPES UNDER EXISTING IRRIGATION TO PRESERVE.

5. SAWCUT ASPHALT HARDCOURTS (APPROX. 3"-4") AND REMOVE. PATCH AFTER INSTALLATION OF NEW SEWER. SEAL COAT ALL HARDCOURT AREA AND RESTRIPE.

UTILITY KEY NOTES

U3	POTHOLE AND LOCATE IRRIGATION. LOWER ALL IRRIGATION LINES IN VICINITY OF NEW DOMESTIC WATER LINE. MAINTAIN 10' DISTANCE FROM ANY PARALLEL IRRIGATION LINE AND A MINIMUM OF 2' ABOVE ANY IRRIGATION LINES. REINSTALL IRRIGATION BOXES. COORDINATE WITH DISTRICT REPRESENTATIVE.
U4	POC WITH PLUMBING - FIELD VERIFY CONNECTION LOCATION
U5	NEW 4" CLEANOUT - PROVIDE CONCRETE COLLAR WHEN CLEANOUTS ARE NOT LOCATED IN SIDEWALKS. CLEAN OUT PLUGS SHALL BE ADJUSTABLE ZURN C02450-PV4 WITH TAMPER PROOF SCREWS FOR USE WITH 4" ID PIPES.
U6	NEW 4" DOUBLE CLEANOUT - EACH DIRECTION - PROVIDE CONCRETE COLLAR WHEN NOT CLEANOUTS ARE NOT LOCATED IN SIDEWALK AREAS. CLEAN OUT PLUGS SHALL BE ADJUSTABLE ZURN CO2450-PV4 WITH TAMPER PROOF SCREWS WITH 4" ID PIPES.
U11	SAW CUT EXISTING SEWER LINE AND PREPARE FOR NEW CONNECTION

UTILITY PLAN - AREA 2 | 1" = 10'-0" | 1

IDENTIFICATION STAMP
DIV. OF THE STATE ARCHITECT
APP. 04-118693 INC:
REVIEWED FOR
SS ☑ FLS ☑ ACS ☑
DATE: 03.13.2020

Date
Revison

Consultant

Engineer

studiowc
ARCHITECTURE + ENGINEERING
515 Encinitas Blvd, Ste 201, Encinitas, California 92024
Telephone: (760) 634-8800 Fax: (760) 452-7041

LICENSED ARCHITECT
ROBERT D. WEBB
C-28036
OCTOBER 31, 2021
STATE OF CALIFORNIA

CHET F. HARRITT ELEM. SCHOOL
LRC & CLASSROOM ADDITION
SANTEE SCHOOL DISTRICT

UTILITY PLAN - AREA 2

Drawn: Author
Checked: Checker
Date: OCTOBER 18, 2019
Job: SSD-CFH-05

C3.2

IDENTIFICATION STAMP
DIV. OF THE STATE ARCHITECT
APP. 04-118693 INC:
REVIEWED FOR
SS ☑ FLS ☑ ACS ☑
DATE: 03.13.2020

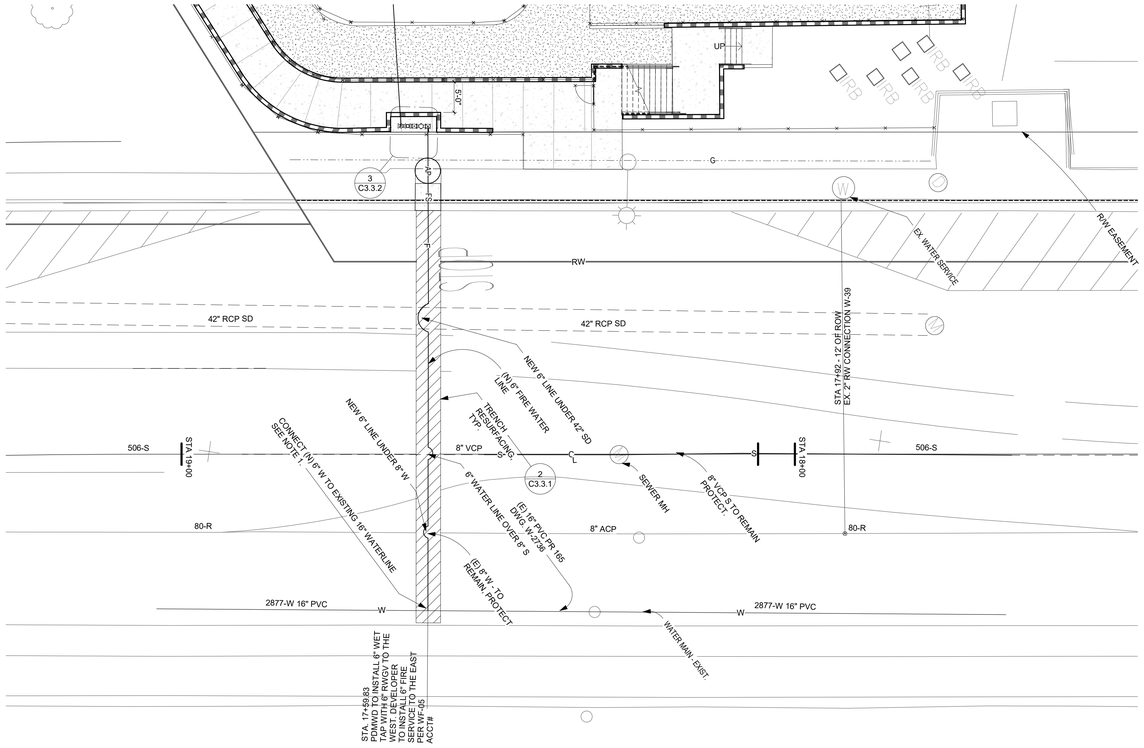

UTILITY PLAN - AREA 3 | 1" = 10'-0" | 1

UTILITY LEGEND

——S——	(N) PVC SEWER LINE - SIZE AS INDICATED
——(E) S——	(E) 8" SEWER LINE (VCP) TO REMAIN - PROTECT
- - -(E) S- - -	(E) 8" SEWER LINE (VCP) TO BE REMOVED
——W——	(N) 2" SCHEDULE 80 WATER LINE
——F——	(N) 6" FIRE SERVICE LINE
F	(N) 6" FIRE SERVICE LINE IN PUBLIC RW W/ TRENCH RESURFACING
MH	EXISTING MANHOLE TO REMAIN OR REMOVED AS NOTED
CO DCO	(N) 4" CLEAN OUT OR DOUBLE CLEAN OUT
	(N) THRUST BLOCK

UTILITY NOTES

1. CONNECT NEW 6" FIRE LINE TO EXISTING 16" CIRCULATING WATER LINE IN MESA STREET. SEE OFF SITE PLANS. CONNECTION TO MAIN SHALL BE PERFORMED BY PADRE DAM MUNICIPAL WATER DISTRICT. CONTRACTOR SHALL PROVIDE NEW DOUBLE DETECTOR CHECK AND CONNECT TO NEW FS STUB. CONTRACTOR SHALL OBTAIN ENCROACHMENT PERMIT FROM CITY OF SANTEE AND PERMIT FROM PADRE DAM. INSTALLATION SHALL BE IN ACCORDANCE WITH PADRE DAM'S STANDARD DRAWINGS AND SPECIFICATIONS. SIDEWALK REPAIR SHALL BE IN ACCORDANCE WITH CITY OF SANTEE STANDARD DRAWINGS AND SPECIFICATIONS. CONTRACTOR IS RESPONSIBLE FOR PREPARATION OF ALL TRAFFIC PLANS AS REQUIRED BY THE CITY OF SANTEE.

2. SEE SEWER WATER SEPARATION NOTES 3/C5.1.

3. AFTER INSTALLATION OF SEWER AND STORM SEWER IN FIELD, CONTRACTOR SHALL RESOD.

4. HAND DIG ALL STORM DRAIN AND SEWER IN FIELD AREA TO AVOID EXISTING IRRIGATION. THREAD PIPES UNDER EXISTING IRRIGATION TO PRESERVE.

5. SAWCUT ASPHALT HARDCOURTS (APPROX. 3"-4") AND REMOVE. PATCH AFTER INSTALLATION OF NEW SEWER. SEAL COAT ALL HARDCOURT AREA AND RESTRIPE.

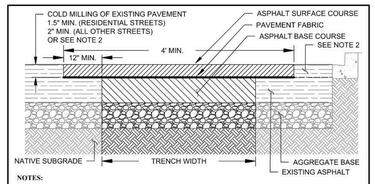

NOTES:

1. Specifications reference the Standard Specifications for Public Works Construction "Green Book" Latest Edition.
2. Existing asphalt shall be saw-cut or cold milled in a clean manner without chipping or breaking the adjacent pavement. All edges shall be clean and vertical. All cuts shall be parallel or perpendicular to the street centerline, with 90 degree corners whenever practical.
3. The minimum trench restoration structural thickness shall be 3-inches of asphalt concrete over 6-inches of aggregate base or shall match the existing structural section of asphalt concrete and aggregate base whichever is greater. Asphalt concrete shall be placed in accordance to Section 306-13. When the edge of trench lies within 4-feet of any curb and/or gutters, the surface course restoration shall be extended to the curb and/or gutter. Surface course shall be placed with a paving machine unless otherwise approved by the City.
4. Asphalt sections less than 4-inches thick shall be asphalt surface course mix only. Asphalt sections 4-inches thick or greater shall be placed in multiple lifts with a base course asphalt concrete with no lift permitted greater than 4-inches thick. The minimum base course thickness shall be 2.5-inches thick.
5. Aggregate base materials shall be Crushed Aggregate Base, Crushed Miscellaneous Base, or Pulverized Miscellaneous Base per Section 200-2. Processed Miscellaneous Base is not permitted.
6. Asphalt concrete materials shall conform to the following:
   Asphalt Base Course: B-PG 64-10 (Per Section 203-6.4)
   Asphalt Surface Course: C2-PG 64-10 (Per Section 203-6.4)
   Rubberized Asphalt (where existing or required): ARHM-GG-C (Per Section 203-11) or 1/2-inch RHMA-G (Per Caltrans Standard Specifications)
   Rubberized asphalt shall be placed for surface course layer only and shall not be placed as the entire asphalt concrete pavement section. Type III aggregates are not permitted for any surface course.
7. Pavement fabric shall be TruePave Engineered Paving mat as manufactured by Tencate or approved equal. Petromat is not permitted. Pavement fabric shall be placed in accordance to Section 302-7 and to the manufacture's requirements.
8. Additional placement of slurry seal or chip seals shall be applied as required by the City for recently resurfaced streets. Trench restorations which do not meet these requirements are subject to removal and replacement.

REVISION	APPROVED	DATE
ORIGINAL	C. SCHMITZ	3/21/2018
REMOVE 1" ASPHALT	S. MILLER	9/30/2019

CITY OF SANTEE STANDARD DRAWING

TRENCH RESURFACING

APPROVED:
PRINCIPAL CIVIL ENGINEER
R.C.E. 60112 DATE: 5/10/2018

DRAWING NUMBER PW - 01

TRENCH REPAIR | 1/4" = 1'-0" | 2

Rev. #	Description	Date

studioWC
ARCHITECTURE + ENGINEERING
515 Encinitas Blvd. Ste. 201, Encinitas, California 92024
Telephone: (760)753-6800 Fax: (760)452-7541

Engineer

LICENSED ARCHITECT
ROBERT D. WEBB
C-28036
OCTOBER 31, 2020
STATE OF CALIFORNIA

CHET F. HARRITT ELEM. SCHOOL
LRC & CLASSROOM ADDITION
SANTEE SCHOOL DISTRICT

UTILITY PLAN - AREA 3

Drawn: Author
Checked: Checker
Date: OCTOBER 18, 2019
Job: SSD-CFH-05

C3.3.1

IDENTIFICATION STAMP
DIV. OF THE STATE ARCHITECT
APP. 04-118693 INC:
REVIEWED FOR
SS ☑ FLS ☑ ACS ☑
DATE: 03.13.2020

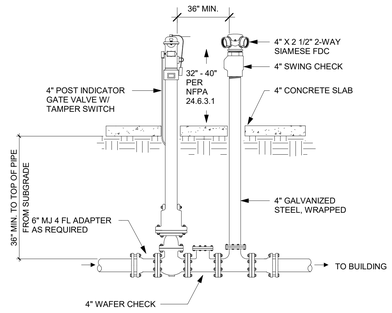

SPECIFICATIONS

1. MEASUREMENTS MUST BE EXACT AND WILL BE SUBJECT TO FIELD INSPECTION.
2. A BLUE REFLECTIVE MARKER MUST BE IN PLACE TO IDENTIFY LOCATION. MARK BLDG "LRC".
3. PAINT RED, PER OCFA STANDARDS.

FDC/PIV ASSEMBLY | 1/2" = 1'-0" | 1

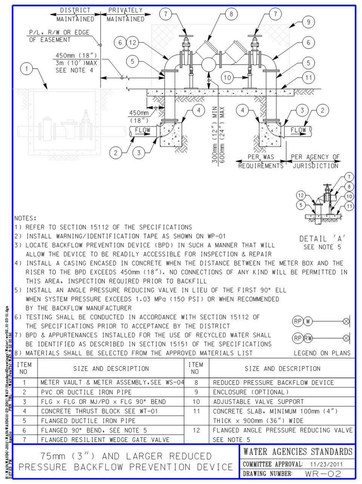

NOTES:
1) REFER TO SECTION 15112 OF THE SPECIFICATIONS
2) INSTALL WARNING/IDENTIFICATION TAPE AS SHOWN ON WP-01
3) LOCATE BACKFLOW PREVENTION DEVICE (BPD) IN SUCH A MANNER THAT WILL ALLOW THE DEVICE TO BE READILY ACCESSIBLE FOR INSPECTION & REPAIR
4) INSTALL A CASING ENCASED IN CONCRETE WHEN THE DISTANCE BETWEEN THE METER BOX AND THE RISER TO THE BPD EXCEEDS 450mm (18"). NO CONNECTIONS OF ANY KIND WILL BE PERMITTED IN THIS AREA. INSPECTION REQUIRED PRIOR TO BACKFILL
5) INSTALL AN ANGLE PRESSURE REDUCING VALVE IN LIEU OF THE FIRST 90° ELL WHEN SYSTEM PRESSURE EXCEEDS 1.03 MPa (150 PSI) OR WHEN RECOMMENDED BY THE BACKFLOW MANUFACTURER
6) TESTING SHALL BE CONDUCTED IN ACCORDANCE WITH SECTION 15112 OF THE SPECIFICATIONS PRIOR TO ACCEPTANCE BY THE DISTRICT
7) BPD & APPURTENANCES INSTALLED FOR THE USE OF RECYCLED WATER SHALL BE IDENTIFIED AS DESCRIBED IN SECTION 15151 OF THE SPECIFICATIONS
8) MATERIALS SHALL BE SELECTED FROM THE APPROVED MATERIALS LIST

LEGEND ON PLANS

ITEM NO	SIZE AND DESCRIPTION	ITEM NO	SIZE AND DESCRIPTION
1	METER VAULT & METER ASSEMBLY, SEE WS-04	8	REDUCED PRESSURE BACKFLOW DEVICE
2	PVC OR DUCTILE IRON PIPE	9	ENCLOSURE (OPTIONAL)
3	FLG x FLG OR MJ/PO x FLG 90° BEND	10	ADJUSTABLE VALVE SUPPORT
4	CONCRETE THRUST BLOCK SEE WT-01	11	CONCRETE SLAB, MINIMUM 100mm (4") THICK x 900mm (36") WIDE
5	FLANGED DUCTILE IRON PIPE		
6	FLANGED 90° BEND, SEE NOTE 5	12	FLANGED ANGLE PRESSURE REDUCING VALVE SEE NOTE 5
7	FLANGED RESILIENT WEDGE GATE VALVE		

75mm (3") AND LARGER REDUCED PRESSURE BACKFLOW PREVENTION DEVICE

WATER AGENCIES STANDARDS
COMMITTEE APPROVAL: 11/23/2011
DRAWING NUMBER WR-02

DOUBLE CHECK VALVE | N.T.S. | 3

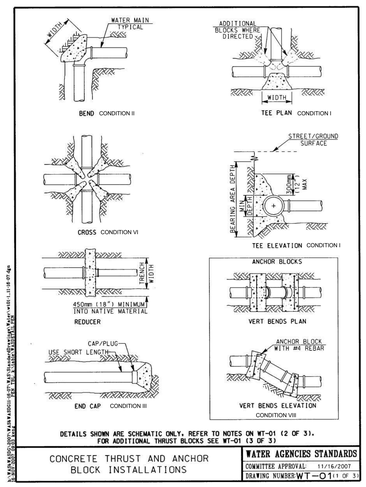

DETAILS SHOWN ARE SCHEMATIC ONLY. REFER TO NOTES ON WT-01 (2 OF 3). FOR ADDITIONAL THRUST BLOCKS SEE WT-01 (3 OF 3)

CONCRETE THRUST AND ANCHOR BLOCK INSTALLATIONS

WATER AGENCIES STANDARDS
COMMITTEE APPROVAL: 11/16/2007
DRAWING NUMBER WT-01 (1 OF 3)

NOTES:
1) REFER TO SECTION 03000 OF SPECIFICATIONS
2) THRUST BLOCKS AND ANCHOR BLOCKS SHALL BE SIZED BY THE DESIGN ENGINEER IN ACCORDANCE WITH SECTION 5.2 OF THE WATER AGENCIES' STANDARDS DESIGN GUIDELINES (WADG)
3) THRUST BLOCKS SHALL BE CENTERED ON THE FITTING SO THAT THE BEARING AREA IS EXACTLY OPPOSITE THE RESULTANT DIRECTION OF THRUST
4) CONCRETE SHALL BE PLACED SO THAT FITTINGS AND VALVES WILL BE ACCESSIBLE FOR REPAIRS OR REPLACEMENT
5) ALL THRUST AND ANCHOR BLOCKS SHALL BE POURED AGAINST WETTED UNDISTURBED SOIL
6) FOR MINIMUM CONCRETE CURING TIME REFER TO SECTION 03000 OF SPECIFICATIONS
7) FOR ADDITIONAL THRUST BLOCKS SEE WT-01 (1 OF 3) AND (3 OF 3)
8) DETAILS SHOWN ON WT-01 (1 OF 2) AND (3 OF 3) ARE SCHEMATIC ONLY.

SEE GEOTECHNICAL REPORT BY NINYO AND MOORE, DATED JULY 11, 2019. PROJECT NO. 108774001. THRUST BLOCKS SHALL BE DESIGNED IN ACCORDANCE WITH FIGURE 6 IN THE GEOTECHNICAL REPORT WITH A PASSIVE LATERAL EARTH PRESSURE OF 350 PSF PER FOOT UP TO 3,500 PSF AND AN ALLOWABLE BEARING CAPACITY OF 3,000 POUNDS PER SQUARE FOOT (PSF).

CONCRETE THRUST AND ANCHOR BLOCK INSTALLATIONS

WATER AGENCIES STANDARDS
COMMITTEE APPROVAL: 11/16/2007
DRAWING NUMBER WT-01 (2 OF 3)

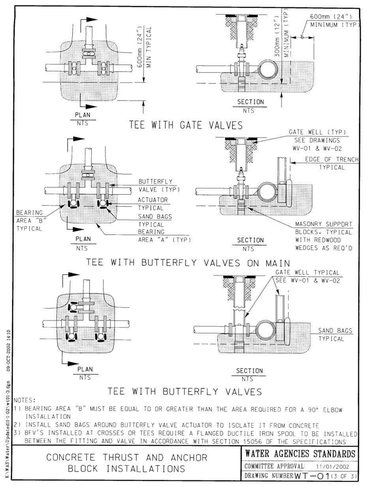

NOTES:
1) BEARING AREA "B" MUST BE EQUAL TO OR GREATER THAN THE AREA REQUIRED FOR A 90° ELBOW INSTALLATION
2) INSTALL SAND BAGS AROUND BUTTERFLY VALVE ACTUATOR TO ISOLATE IT FROM CONCRETE
3) BFV'S INSTALLED AT CROSSES OR TEES REQUIRE A FLANGED DUCTILE IRON SPOOL TO BE INSTALLED BETWEEN THE FITTING AND VALVE IN ACCORDANCE WITH SECTION 15056 OF THE SPECIFICATIONS

CONCRETE THRUST AND ANCHOR BLOCK INSTALLATIONS

WATER AGENCIES STANDARDS
COMMITTEE APPROVAL: 11/01/2002
DRAWING NUMBER WT-01 (3 OF 3)

CONDITION VI

VERTICAL DOWN BEND

PIPE SIZE	THRUST BLOCK BEARING AREA IN SQUARE FEET CONDITION I	II	III			VI		VIII
<6"	2.0	2.9	2.0			4 @ 1.6		2 @ 1.6
6"	4.3	4.0	4.3			4 @ 3.3		2 @ 3.3
8"	7.4	10.6	7.4			4 @ 5.7		2 @ 5.7

NOTES:
1. THRUST BLOCK AREAS BASED ON 225 PSI PRESSURE AND 1,000 PSF ALLOWABLE SOIL PRESSURE WITH 30" OF COVER MINIMUM. ADDITIONAL BEARING AREA REQUIRED FOR SPECIAL CONDITIONS SHALL BE APPROVED BY THE DISTRICT ENGINEER.
2. THRUST BLOCK BEARING FACES SHALL BE PLACED AGAINST UNDISTRUBED SOIL, APPROVED COMPACTED BACKFILLED OR CLASS 100-E-100 SLURRY.
3. THRUST BLOCKS SHALL BE CLASS 560-C-3250 CONCRETE, UNLESS SPECIFIED OTHERWISE.
4. TO FACILITATE FUTURE REMOVAL OF THRUST BLOCKS AND LINE EXTENSIONS:
   A. INSTALL 1/4" BENT ROD HANDLES.
   B. USE CARDBOARD SEPARATORS BETWEEN BLOCKS, IF NEEDED.
5. CONCRETE SHALL NOT EXTEND ONTO FLANGE OR ADJOINING PIPE.
6. ALL REINFORCING STEEL SHALL BE #4 BARS.
7. FOR VERTICAL UP BENS USE CONDITION VII AND VIII.

THRUST BLOCK - PADRE DAM STANDARD | N.T.S. | 2

Rev. #	Description	Date

studioWC
ARCHITECTURE + ENGINEERING
515 Encinitas Blvd. Ste. 201, Encinitas, California 92024
Telephone: (760)753-6800 Fax: (760)452-7541

Engineer

LICENSED ARCHITECT ROBERT D. WEBB
C-28036
OCTOBER 31, 2021
STATE OF CALIFORNIA

CHET F. HARRITT ELEM. SCHOOL
LRC & CLASSROOM ADDITION
SANTEE SCHOOL DISTRICT

FIRE SERVICE DETAILS

Drawn: Author
Checked: Checker
Date: OCTOBER 18, 2019
Job: SSD-CFH-05

C3.3.2

IDENTIFICATION STAMP
DIV. OF THE STATE ARCHITECT
APP. 04-118693 INC:
REVIEWED FOR
SS ☑ FLS ☑ ACS ☑
DATE: 03.13.2020

UTILITY LEGEND

———S———	(N) PVC SEWER LINE - SIZE AS INDICATED
———(E) S———	(E) 8" SEWER LINE (VCP) TO REMAIN - PROTECT
- - - -(E) S- - - -	(E) 8" SEWER LINE (VCP) TO BE REMOVED
———W———	(N) 2" SCHEDULE 80 WATER LINE
———F———	(N) 6" FIRE SERVICE LINE
F	(N) 6" FIRE SERVICE LINE IN PUBLIC RW W/ TRENCH RESURFACING
(MH)	EXISTING MANHOLE TO REMAIN OR REMOVED AS NOTED
O CO O DCO	(N) 4" CLEAN OUT OR DOUBLE CLEAN OUT
▼	(N) THRUST BLOCK

UTILITY NOTES

1. CONNECT NEW 6" FIRE LINE TO EXISTING 16" WATER LINE IN MESA STREET. SEE OFF SITE PLANS. CONNECTION TO MAIN SHALL BE PERFORMED BY PADRE DAM MUNICIPAL WATER DISTRICT. CONTRACTOR SHALL PROVIDE NEW DOUBLE DETECTOR CHECK AND CONNECT TO NEW FS STUB. CONTRACTOR SHALL OBTAIN ENCROACHMENT PERMIT FROM CITY OF SANTEE AND PERMIT FROM PADRE DAM. INSTALLATION SHALL BE IN ACCORDANCE WITH PADRE DAM'S STANDARD DRAWINGS AND SPECIFICATIONS. SIDEWALK REPAIR SHALL BE IN ACCORDANCE WITH CITY OF SANTEE STANDARD DRAWINGS AND SPECIFICATIONS. CONTRACTOR IS RESPONSIBLE FOR PREPARATION OF ALL TRAFFIC PLANS AS REQUIRED BY THE CITY OF SANTEE.

2. SEE SEWER WATER SEPARATION NOTES 3/C5.1.

3. AFTER INSTALLATION OF SEWER AND STORM SEWER IN FIELD, CONTRACTOR SHALL RESOD.

4. HAND DIG ALL STORM DRAIN AND SEWER IN FIELD AREA TO AVOID EXISTING IRRIGATION. THREAD PIPES UNDER EXISTING IRRIGATION TO PRESERVE.

5. SAWCUT ASPHALT HARDCOURTS (APPROX. 3"-4") AND REMOVE. PATCH AFTER INSTALLATION OF NEW SEWER. SEAL COAT ALL HARDCOURT AREA AND RESTRIPE.

UTILITY KEYNOTES

Rev. #	Description	Date

studioWC ARCHITECTURE + ENGINEERING
515 Encinitas Blvd. Ste. 201, Encinitas, California 92024
Telephone: (760)753-6800 Fax: (760)452-7541

REGISTERED PROFESSIONAL ENGINEER
62788
JUNE 30, 20
Engineer

LICENSED ARCHITECT
ROBERT D. WEBB
C-28036
OCTOBER 31, 2021
STATE OF CALIFORNIA

CHET F. HARRITT ELEM. SCHOOL
LRC & CLASSROOM ADDITION
SANTEE SCHOOL DISTRICT

SEWER CONNECTION

Drawn: Author
Checked: Checker
Date: OCTOBER 18, 2019
Job: SSD-CFH-05

C3.3.3

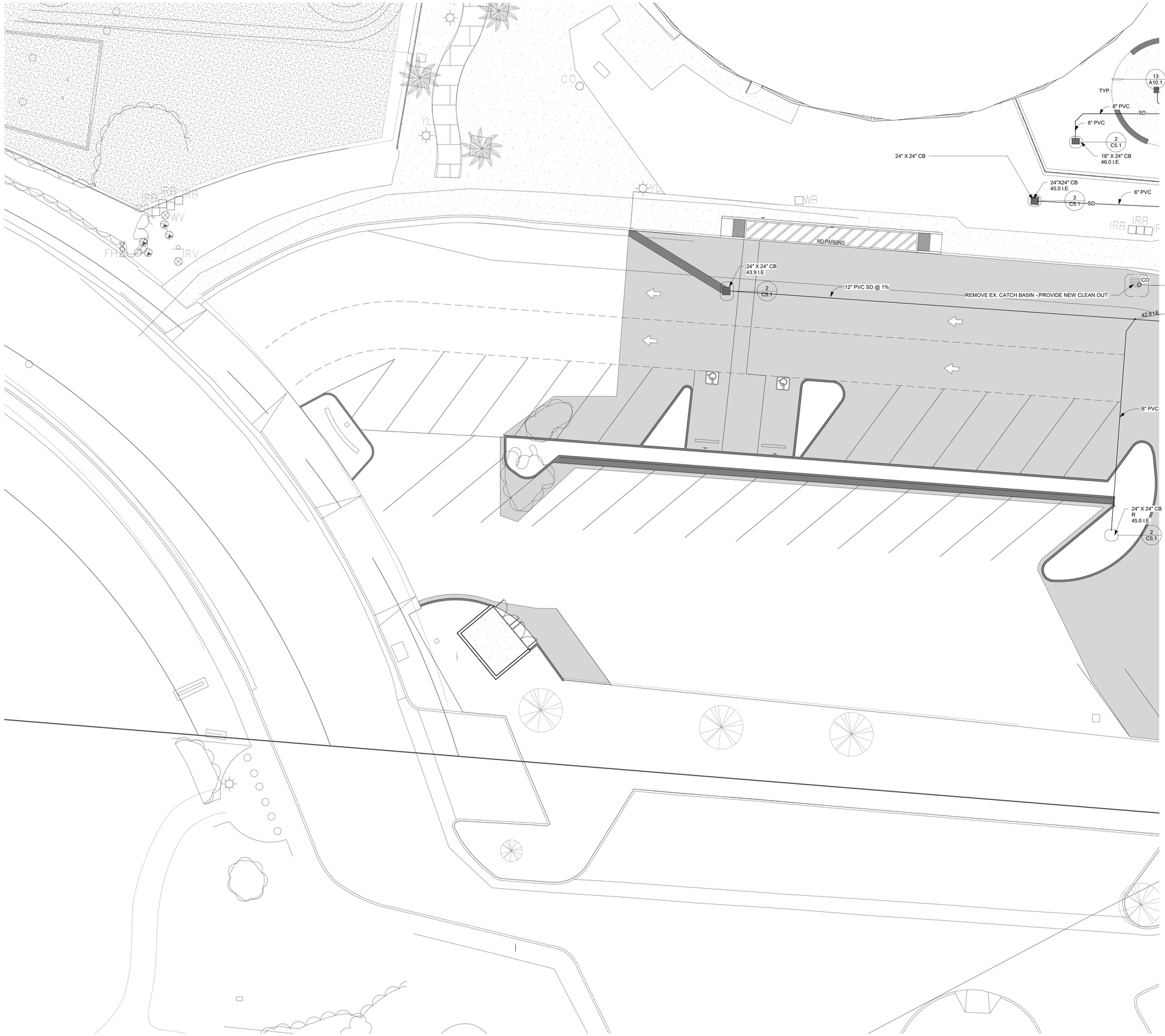

STORM DRAIN PLAN - AREA 1 | 1" = 10'-0" | 1

IDENTIFICATION STAMP
DIV. OF THE STATE ARCHITECT
APP. 04-118693 INC:
REVIEWED FOR
SS ☑ FLS ☑ ACS ☑
DATE: 03.13.2020

Revison	Date

Consultant

Engineer

studiowc
ARCHITECTURE + ENGINEERING
515 Encinitas Blvd, Ste 201, Encinitas, California 92024
Telephone: (760)632-8800 Fax: (760)452-7041

LICENSED ARCHITECT
ROBERT D. WEBB
C-28036
OCTOBER 31, 2021
STATE OF CALIFORNIA

CHET F. HARRITT ELEM. SCHOOL
LRC & CLASSROOM ADDITION
SANTEE SCHOOL DISTRICT

STORM DRAIN PLAN - AREA 1

Drawn: Author
Checked: Checker
Date: OCTOBER 18, 2019
Job: SSD-CFH-05

C4.1

GENERAL NOTES

A. COORDINATE ALL ROOF DRAIN PIPING WITH P2.2
B. AFTER INSTALLATION OF SEWER AND STORM SEWER IN FIELD, CONTRACTOR SHALL RESOD. ASSUME A MIN. OF 5000 SF OF SOD
C. HAND DIG ALL STORM DRAIN AND SEWER IN FIELD AREA TO AVOID EXISTING IRRIGATION. THREAD PIPES UNDER EXISTING IRRIGATION TO PRESERVE.

IDENTIFICATION STAMP
DIV. OF THE STATE ARCHITECT
APP. 04-118693 INC:
REVIEWED FOR
SS ☑ FLS ☑ ACS ☑
DATE: 03.13.2020

Revison	Date

Consultant

Engineer

studiowc
ARCHITECTURE + ENGINEERING
515 Encinitas Blvd, Ste. 201 Encinitas, California 92024
Telephone: (760) 634-8800 Fax: (760) 452-7341

LICENSED ARCHITECT
ROBERT D. WEBB
C-28036
OCTOBER 31, 2021
STATE OF CALIFORNIA

CHET F. HARRITT ELEM. SCHOOL
LRC & CLASSROOM ADDITION
SANTEE SCHOOL DISTRICT

STORM DRAIN PLAN - AREA 2

Drawn: Author
Checked: Checker
Date: OCTOBER 18, 2019
Job: SSD-CFH-05

C4.2

STORM DRAIN PLAN - AREA 2 | 1" = 10'-0" | 1

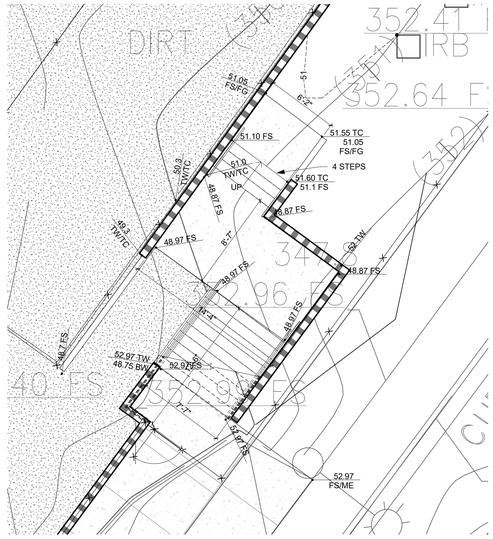

STAIR DETAIL | 3/16" = 1'-0" | 1

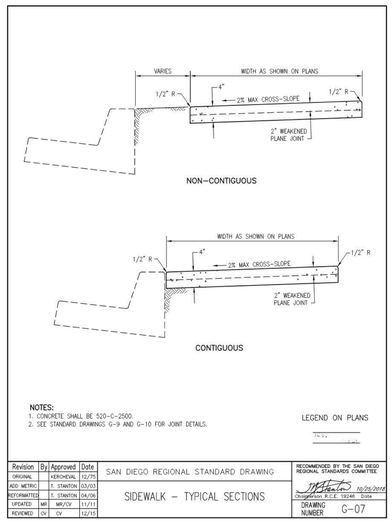

Revision	By	Approved	Date
ORIGINAL		KERCHEVAL	11/75
ADD METRIC		T. STANTON	03/03
REFORMATTED		T. STANTON	04/06
UPDATED	MR	MR/DV	11/11
REVIEWED	CV	CV	12/15

CITY SIDEWALK | N.T.S. | 5

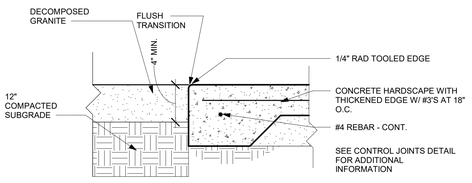

DG TO CONCRETE | 1 1/2" = 1'-0" | 2

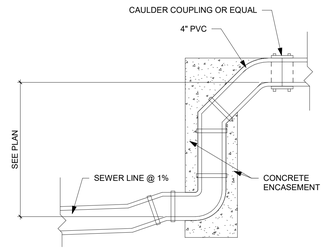

SEWER DROP CONNECTION | 1" = 1'-0" | 6

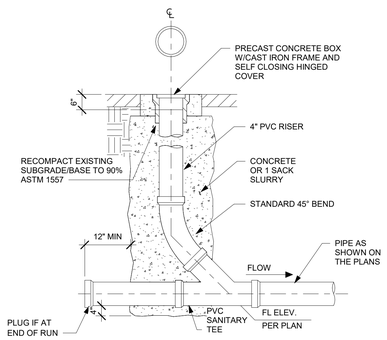

SEWER/AD CLEANOUT | 1/2" = 1'-0" | 3

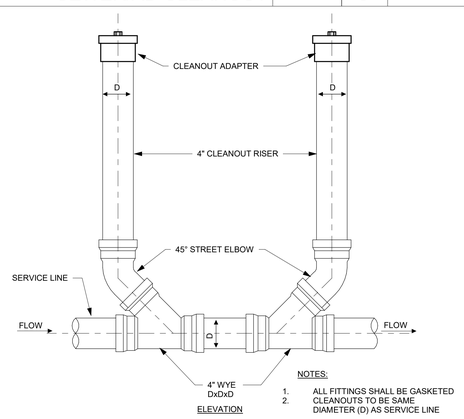

SITE UTILITIES - DOUBLE CLEANOUT | 1 1/2" = 1'-0" | 4

IDENTIFICATION STAMP
DIV. OF THE STATE ARCHITECT
APP. 04-118693 INC:
REVIEWED FOR
SS ☑ FLS ☑ ACS ☑
DATE: 03.13.2020

Revision	Date

Consultant

Engineer

studiowc
ARCHITECTURE + ENGINEERING
515 Encinitas Blvd, Ste 201, Encinitas, California 92024
Telephone: (760) 634-8880 Fax: (760) 452-7541

LICENSED ARCHITECT
ROBERT D. WEBB
C-28036
OCTOBER 31, 2021
STATE OF CALIFORNIA

CHET F. HARRITT ELEM. SCHOOL
LRC & CLASSROOM ADDITION
SANTEE SCHOOL DISTRICT

CIVIL DETAILS

Drawn: Author
Checked: Checker
Date: OCTOBER 18, 2019
Job: SSD-CFH-05

C5.0

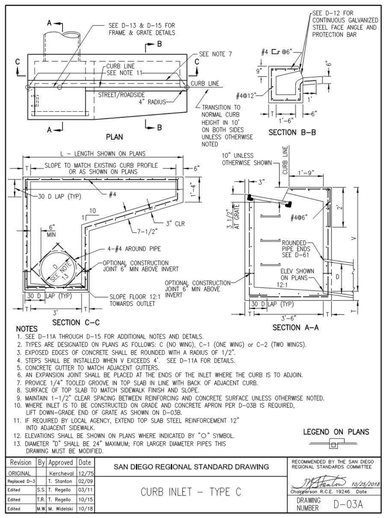

NOTES

1. SEE D-11A THROUGH D-15 FOR ADDITIONAL NOTES AND DETAILS.
2. TYPES ARE DESIGNATED ON PLANS AS FOLLOWS: C (NO WING), C-1 (ONE WING) or C-2 (TWO WINGS).
3. EXPOSED EDGES OF CONCRETE SHALL BE ROUNDED WITH A RADIUS OF 1/2".
4. STEPS SHALL BE INSTALLED WHEN V EXCEEDS 4'. SEE D-11A FOR DETAILS.
5. CONCRETE GUTTER TO MATCH ADJACENT GUTTERS.
6. AN EXPANSION JOINT SHALL BE PLACED AT THE ENDS OF THE INLET WHERE THE CURB IS TO ADJOIN.
7. PROVIDE 1/4" TOOLED GROOVE IN TOP SLAB IN LINE WITH BACK OF ADJACENT CURB.
8. SURFACE OF TOP SLAB TO MATCH SIDEWALK FINISH AND SLOPE.
9. MAINTAIN 1-1/2" CLEAR SPACING BETWEEN REINFORCING AND CONCRETE SURFACE UNLESS OTHERWISE NOTED.
10. WHERE INLET IS TO BE CONSTRUCTED ON GRADE AND CONCRETE APRON PER D-03B IS REQUIRED, LIFT DOWN-GRADE END OF GRATE AS SHOWN ON D-03B.
11. IF REQUIRED BY LOCAL AGENCY, EXTEND TOP SLAB STEEL REINFORCEMENT 12" INTO ADJACENT SIDEWALK.
12. ELEVATIONS SHALL BE SHOWN ON PLANS WHERE INDICATED BY "O" SYMBOL.
13. DIAMETER "D" SHALL BE 24" MAXIMUM; FOR LARGER DIAMETER PIPES THIS DRAWING MUST BE MODIFIED.

LEGEND ON PLANS

Revision	By	Approved	Date
ORIGINAL		Kercheval	12/78
Replaced D-3	T. Stanton		02/09
Edited	S.S./ T. Regelo		03/11
Edited	T.R/ T. Regelo		10/15
Edited	M.W/ M. Wolinski		10/18

SAN DIEGO REGIONAL STANDARD DRAWING

CURB INLET – TYPE C

RECOMMENDED BY THE SAN DIEGO REGIONAL STANDARDS COMMITTEE

Christopher A.C.E. 19246 Date 10/26/2019

DRAWING NUMBER D-03A

CURB INLET	1/4" = 1'-0"	1

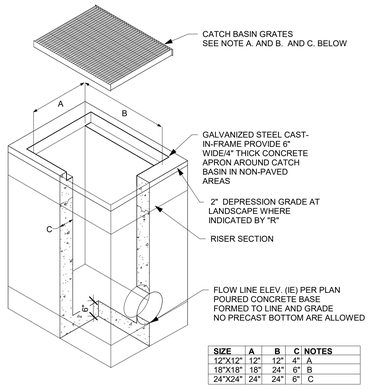

SIZE	A	B	C	NOTES
12"X12"	12"	12"	4"	A
18"X18"	18"	24"	6"	B
24"X24"	24"	24"	6"	C

CATCH BASIN NOTES:

A. 12"X12" GRATES - IRONAGE - OBILO GRATE (FRAME BY OTHERS). 12"X12" HEEL PROOF CATCH BASIN GRADE DRAWINGS NO. OBL.N.12X12, TRAFFIC RATED

B. 18"X24" GRATES - IRONAGE - OBILO GRATE (FRAME BY OTHERS). 18"X24" CATCH BASIN GRATE DRAWING NO. OBL.I.18024 - TRAFFIC RATED

C. 24"X24" GRATES - IRONAGE - OBILO GRATE (FRAME BY OTHERS). 24"X24" HEEL-PROOF CATCH BASIN GRATE, DRAWING NO 001-INT.I.24sq_HP - TRAFFIC RATED

D. 24"X24" GRATE IN ASPHALT PARKING LOT ONLY - GRATE AND FRAME BY BROOKS PRODUCTS - 24"X24" CB - HEAVY DUTY STEEL TRAFFIC RATED GRATE.

TYPICAL NOTE: OPENINGS IN GRATINGS OR STRAINER LOCATED IN PEDESTRIAN CIRCULATION PATHS OR IN pot SHALL NOT ALLOW PASSAGE OF A SPHERE MORE THAN 1/2" DIAMETER. ELONGATED OPENINGS SHALL BE PLACED SO THAT LONG DIMENSION IS PERPENDICULAR TO THE DOMINANT DIRECTION OF TRAVEL IN COMPLIANCE WITH SECTION 11B-302.3. WHERE NO DOMINANT DIRECTION OF TRAVEL IS DEFINED, OPENINGS SHALL BE 1/2" MAX IN ALL DIRECTIONS.

CATCH BASIN	1/2" = 1'-0"	2

CONSTRUCTION REQUIREMENTS FOR WATER, RECYCLED WATER AND SEWER MAINS

CASE 1: NEW RECYCLED WATER OR SEWER MAINS

ZONE

A SPECIAL PERMISSION REQUIRED. DO NOT LOCATE ANY PARALLEL SEWER OR RECYCLED WATER MAINS IN THIS AREA WITHOUT DISTRICT AND STATE HEALTH DEPARTMENT APPROVAL

B PVC SEWER PIPE WITH PUSH-ON TYPE RUBBER RING JOINTS FOR SEWER MAINS C-900.CL305 OR C-905.CL235 PVC PIPE WITH PUSH ON TYPE RUBBER RING JOINTS FOR RECYCLED WATER MAINS

C A 6.1m (20') SECTION OF PVC SEWER PIPE CENTERED AT THE MAIN BEING CROSSED. OR SEWER PIPE INSTALLED IN A CASING (FOR SEWER MAINS) A 6.1m (20') SECTION OF C-900.CL305 OR C-905.CL235 PVC PIPE CENTERED AT THE MAIN BEING CROSSED. OR RECYCLED WATER PIPE INSTALLED IN A CASING (FOR RECYCLED WATER MAINS)

D A 6.1m (20') SECTION OF PVC SEWER PIPE CENTERED AT THE MAIN BEING CROSSED. OR SEWER PIPE INSTALLED IN A CASING (FOR SEWER MAINS) A 6.1m (20') SECTION OF C-900.CL305 OR C-905.CL235 PVC PIPE CENTERED AT THE MAIN BEING CROSSED. OR RECYCLED WATER PIPE INSTALLED IN A CASING (FOR RECYCLED WATER MAINS)

P PROHIBITED ZONE: NO SEWER. WATER OR RECYCLED WATER MAINS: SECTION 64630 (e) (2) CALIFORNIA ADMINISTRATIVE CODE. TITLE 22

CONSTRUCTION REQUIREMENTS FOR WATER, RECYCLED WATER AND SEWER MAINS

CASE 2: NEW WATER OR RECYCLED WATER MAINS

ZONE

A SPECIAL PERMISSION REQUIRED. DO NOT LOCATE ANY PARALLEL WATER OR RECYCLED WATER MAINS IN THIS AREA WITHOUT DISTRICT AND STATE HEALTH DEPARTMENT APPROVAL

B C-900.CL305 OR C-905.CL235 PVC PIPE WITH PUSH ON TYPE RUBBER RING JOINTS FOR WATER MAINS C-900.CL305 OR C-905.CL235 PVC PIPE WITH PUSH ON TYPE RUBBER RING JOINTS FOR RECYCLED WATER MAINS

C A 6.1m (20') SECTION OF C-900.CL305 OR C-905.CL235 PVC PIPE CENTERED AT THE MAIN BEING CROSSED. OR WATER PIPE INSTALLED IN A CASING (FOR WATER MAINS) A 6.1m (20') SECTION OF C-900.CL305 OR C-905.CL235 PVC PIPE CENTERED AT THE MAIN BEING CROSSED. OR RECYCLED WATER PIPE INSTALLED IN A CASING (FOR RECYCLED WATER MAINS)

D A 6.1m (20') SECTION OF C-900.CL305 OR C-905.CL235 PVC PIPE CENTERED AT THE MAIN BEING CROSSED. OR WATER PIPE INSTALLED IN A CASING (FOR WATER MAINS) A 6.1m (20') SECTION OF C-900.CL305 OR C-905.CL235 PVC. PIPE CENTERED AT THE MAIN BEING CROSSED. OR RECYCLED WATER PIPE INSTALLED IN A CASING (FOR RECYCLED WATER MAINS)

P PROHIBITED ZONE: NO SEWER. WATER OR RECYCLED WATER MAINS: SECTION 64630 (e) (2) CALIFORNIA ADMINISTRATIVE CODE. TITLE 22

REFER TO THE WATER AGENCIES' STANDARDS DESIGN GUIDE FOR PIPE SEPARATION REQUIREMENTS

WATER, RECYCLED WATER AND SEWER MAIN PARALLEL AND PERPENDICULAR SEPARATION NOTES

WATER AGENCIES' STANDARDS

COMMITTEE APPROVAL 11/23/2011

DRAWING NUMBER W1-03

SEWER WATER SEPARATION NOTES	12" = 1'-0"	3

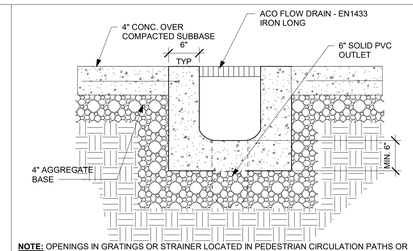

NOTE: OPENINGS IN GRATINGS OR STRAINER LOCATED IN PEDESTRIAN CIRCULATION PATHS OR IN pot SHALL NOT ALLOW PASSAGE OF A SPHERE MORE THAN 1/2" DIAMETER. ELONGATED OPENINGS SHALL BE PLACED SO THAT LONG DIMENSION IS PERPENDICULAR TO THE DOMINANT DIRECTION OF TRAVEL IN COMPLIANCE WITH SECTION 11B-302.3. WHERE NO DOMINANT DIRECTION OF TRAVEL IS DEFINED, OPENINGS SHALL BE 1/2" MAX IN ALL DIRECTIONS.

TRENCH DRAIN	1" = 1'-0"	4

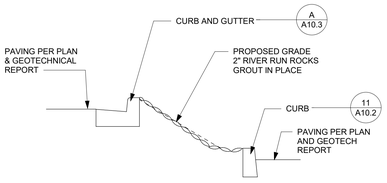

SECTION AT SLOPE	3/8" = 1'-0"	5

IDENTIFICATION STAMP
DIV. OF THE STATE ARCHITECT
APP. 04-118693 INC:
REVIEWED FOR
SS ☑ FLS ☑ ACS ☑
DATE: 03.13.2020

Revision	Date

Consultant

Engineer

studiowc
ARCHITECTURE + ENGINEERING
515 Encinitas Blvd, Ste 201, Encinitas, California 92024
Telephone: (760) 452-8800 Fax: (760) 452-7541

LICENSED ARCHITECT ROBERT D. WEBB C-28036 OCTOBER 31, 2021 STATE OF CALIFORNIA

CHET F. HARRITT ELEM. SCHOOL
LRC & CLASSROOM ADDITION
SANTEE SCHOOL DISTRICT

CIVIL DETAILS

Drawn: Author
Checked: Checker
Date: OCTOBER 18, 2019
Job: SSD-CFH-05

C5.1

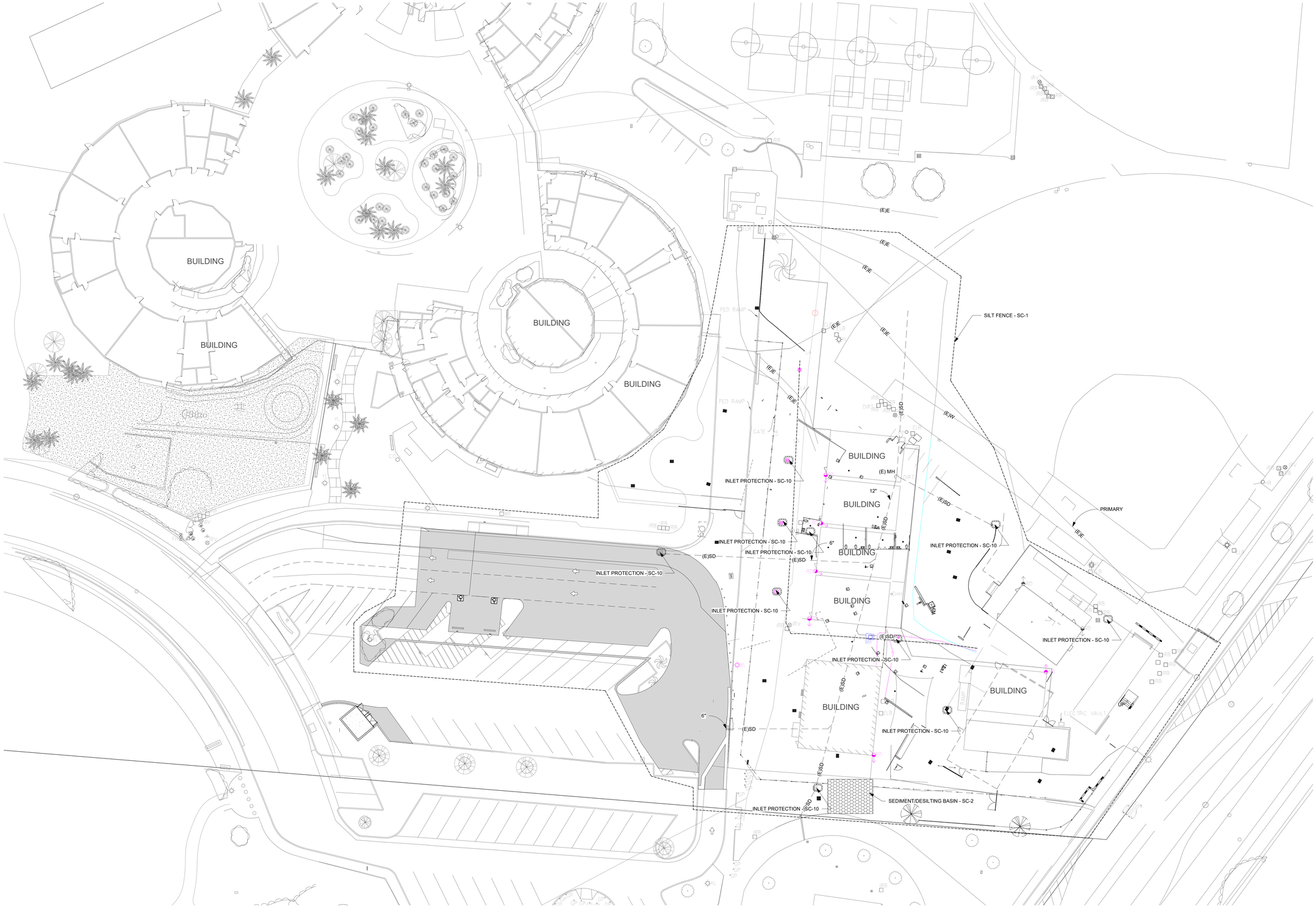

NOTES:

REFER TO COUNTY OF SAN DIEGO - STORMWATER BEST MANAGEMENT PRACTICES FOR ALL GUIDELINES AND DETAILS.

STORM WATER POLLUTION PREVENTION PLAN | 1" = 20'-0" | 1

IDENTIFICATION STAMP
DIV. OF THE STATE ARCHITECT
APP. 04-118693 INC:
REVIEWED FOR
SS ☑ FLS ☑ ACS ☑
DATE: 03.13.2020

Revison	Date

Consultant

Engineer

studiowc
ARCHITECTURE + ENGINEERING
515 Encinitas Blvd, Ste 201, Encinitas, California 92024
Telephone: (760) 634-8800 Fax: (760) 452-7344

LICENSED ARCHITECT
ROBERT D. WEBB
C-28036
OCTOBER 31, 2021
STATE OF CALIFORNIA

CHET F. HARRITT ELEM. SCHOOL
LRC & CLASSROOM ADDITION
SANTEE SCHOOL DISTRICT

STORM WATER POLLUTION PLAN

Drawn: Author
Checked: Checker
Date: OCTOBER 18, 2019
Job: SSD-CFH-05

C6.1

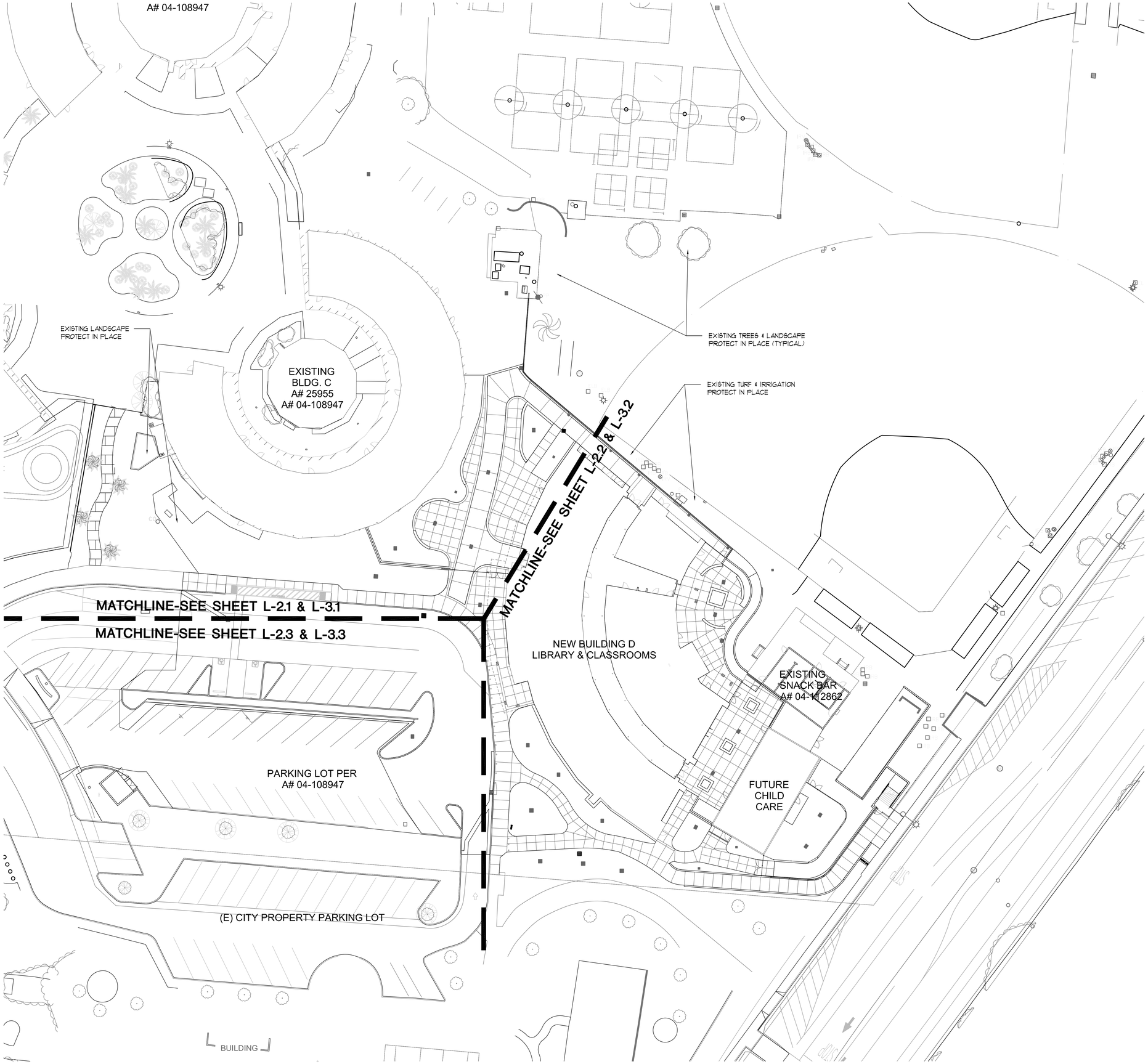

20' 10' 0 20' 40'

SCALE 1"=20'-0"

THE LIGHTFOOT PLANNING GROUP
PLANNING
5900 PASTEUR COURT SUITE 110
CARLSBAD, CA 92008
(760) 692-1924 www.lightfootpg.com
SITE DESIGN LANDSCAPE ARCHITECTURE

IDENTIFICATION STAMP
DIV. OF THE STATE ARCHITECT
APP. 04-118693 INC:
REVIEWED FOR
SS ☑ FLS ☑ ACS ☑
DATE: 03.13.2020

Revison	Date

Consultant

Engineer

studiowc
ARCHITECTURE + ENGINEERING
515 Encinitas Blvd, Ste. 201, Encinitas, California 92024
Telephone: (760)753-6800 Fax: (760)452-7541

LICENSED ARCHITECT
ROBERT D. WEBB AJA
C-28036
OCTOBER 31, 2021
STATE OF CALIFORNIA

CHET F. HARRITT ELEM. SCHOOL
LRC & CLASSROOM ADDITION
SANTEE SCHOOL DISTRICT

PARTIAL SITE PLAN-LANDSCAPE

Drawn: Author
Checked: Checker
Date: August 1, 2019
Job: SSD-CFH-05

L-1.0

IDENTIFICATION STAMP
DIV. OF THE STATE ARCHITECT
APP. 04-118693 INC:
REVIEWED FOR
SS ☑ FLS ☑ ACS ☑
DATE: 03.13.2020

IRRIGATION SCHEDULE

DETAILS	SYMBOL	DESCRIPTION	QTY	PRECIP	PSI	GPM
J-M / L-4.1		SHRUB IRRIGATION SUB-SURFACE DRIPLINE RAINBIRD XFS SERIES .90 GPH AT 12" O.C. LINE SPACING AT 12" O.C.	3,928 S.F.	1.44 in/h	25	59
G/H / L-4.1		SHRUB IRRIGATION ROTARY SPRINKLER HEADS RAINBIRD R-VAN SERIES 8' TO 24' RADIUS HEAD TO HEAD COVERAGE.	3,829 S.F.	0.68 in/h	40	27
G/H / L-4.1		SHRUB IRRIGATION OVERHEAD SPRAY HEADS RAINBIRD U-SERIES 5' TO 15' RADIUS HEAD TO HEAD COVERAGE	231.2 S.F.	1.20 in/h	30	3
I / L-4.1	■	TREE IRRIGATION POP-UP STREAM BUBBLER RAINBIRD MPR STREAM BUBBLER SQ-B TWO HEADS PER TREE EA SIDE OF TRUNK	10	-	30	10
A / L-4.2	⊙	POP-UP DRIP INDICATOR -HUNTER ECO-INDICATOR				

SYMBOL	MANUFACTURER/MODEL/DESCRIPTION
F / L-4.1	RAIN BIRD XCZ-FRBR-COM SERIES CONTROL ZONE KIT-FBSB VALVE WITH PRESSURE REGULATING (40PSI) QUICK-CHECK BASKET FILTERS.
E / L-4.1	RAIN BIRD FBSB-R SERIES REMOTE CONTROL VALVES.
B / L-4.1	MATCO NORCA-755 SERIES SHUT OFF VALVE FULL PORT BALL VALVE
C / L-4.1	BUCKNER SUPERIOR-QCV100NA QUICK COUPLER VALVE 1" NPT, SINGLE SLOT, NP, PURPLE TUFF TOP ACME THREAD

SYMBOL	MANUFACTURER/MODEL/DESCRIPTION
C-E / L-4.2	PVC CLASS 200 RING-TITE C900 PRESSURE MAINLINE PIPING- 4" SIZE OR AS NOTED- PURPLE N.P. COLOR INSTALL WITH MYLAR/METALIC DETECTION TAPE PER SPEC.
	PVC CLASS 200- NO PRESSURED LATERAL LINE
	PVC SCH. 40 SLEEVE PURPLE N.P.-FOR MAIN OR LATERAL 2X PIPE DIAMETER
	EXISTING PVC MAINLINE VERIFY LOCATION AND PROTECT IN PLACE.

VALVE KEY

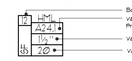

# PROGRAMS	# BODY HEIGHT OR TYPE
1= TURF	6= 6" POP-UP HEIGHT
2= SHRUB	12= 12" POP-UP HEIGHT
	B= BUBBLER
	R= ROTARY
	D= SUBSURFACE DRIP
	F= FIXED RISER SPRAY

IMPORTANT NOTES:
CONTRACTOR SHALL INSTALL ALL OVERHEAD IRRIGATION SYSTEMS IN ACCORDANCE WITH AB 1881 MUELO STANDARDS. ALL HEADS TO BE PLACED 24" CLEAR OF HARDSCAPE ADJUST FOR FULL HEAD TO HEAD COVERAGE.

CONTRACTOR SHALL PROVIDE ALL WIRE CONDUCTORS & CONDUITS TO CONNECT ALL REMOTE CONTROL VALVE MANIFOLDS TO EXISTING CONTROLLER. CONTRACTOR SHALL INSURE FULL AUTOMATIC OPERATION OF IRRIGATION SYSTEM.

PROJECT IRRIGATION POINT OF CONNECTION AT EXISTING MAINLINE.
INSURE PROPER FUNCTION OF EXISTING MASTER VALVE AND FLOW SENSOR WITH NEW IRRIGATION.

EXISTING BLDG. C
A# 25955
A# 04-108947

PROPOSED IRRIGATION PIPING SLEEVE - COORDINATE WITH OTHER TRADES (TYPICAL)

RELOCATE CONTROLLER CONDUIT & PULL BOX

POC

SYSTEM POINT OF CONNECTION FROM EXISTING MAINLINE

PROPOSED VALVE MANIFOLD (TYPICAL)

TREE BUBBLER (TYPICAL)

RELOCATE EXISTING CONTROLLER CONDUIT & PULL BOX PER DSA DWG. OUTSIDE OF AREA OF CONSTRUCTION IMPACT (TYPICAL)

MATCHLINE-SEE SHEET L-2.2

MATCHLINE-SEE SHEET L-2.3

NO PARKING

10' 5' 0 10' 20'
SCALE 1"=10'-0"

THE LIGHTFOOT PLANNING GROUP
PLANNING SITE DESIGN LANDSCAPE ARCHITECTURE
5900 PASTEUR COURT SUITE 110
CARLSBAD, CA 92008
(760) 692-1924 www.lightfootpg.com

Revison | Date

Consultant

Engineer

studiowc
ARCHITECTURE + ENGINEERING
515 Encinitas Blvd, Ste 201, Encinitas, California 92024
Telephone: (760) 634-8880 Fax: (760) 452-7341

LICENSED ARCHITECT
ROBERT D. WEBB, A.I.A.
R.D. Webb
C-28036
OCTOBER 31, 2021
STATE OF CALIFORNIA

CHET F. HARRITT ELEM. SCHOOL
LRC & CLASSROOM ADDITION
SANTEE SCHOOL DISTRICT

IRRIGATION PLAN

Drawn: Author
Checked: Checker
Date: August 1, 2019
Job: SSD-CFH-05

L-2.1

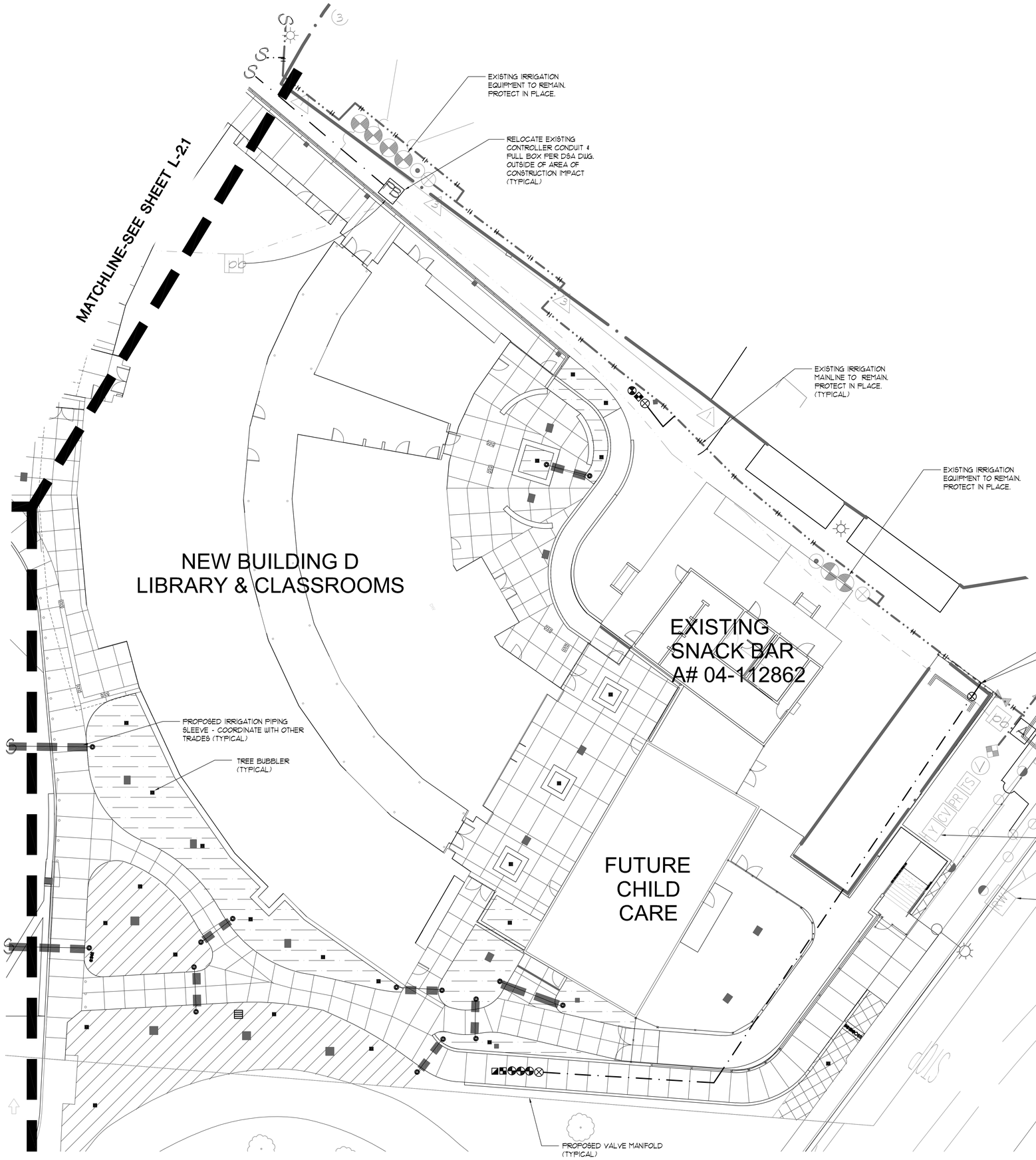

IRRIGATION SCHEDULE

DETAILS	SYMBOL	DESCRIPTION	QTY	PRECIP	PSI	GPM
J-M / L-4.1		SHRUB IRRIGATION SUB-SURFACE DRIPLINE RAINBIRD XFS SERIES .90 GPH AT 12" O.C. LINE SPACING AT 12" O.C.	3,928 S.F.	1.44 in/h	25	59
G,H / L-4.1		SHRUB IRRIGATION ROTARY SPRINKLER HEADS RAINBIRD R-VAN SERIES 8' TO 24' RADIUS HEAD TO HEAD COVERAGE.	3,829 S.F.	0.68 in/h	40	27
G,H / L-4.1		SHRUB IRRIGATION OVERHEAD SPRAY HEADS RAINBIRD U-SERIES 5' TO 15' RADIUS HEAD TO HEAD COVERAGE	231.2 S.F.	1.20 in/h	30	3
I / L-4.1	■	TREE IRRIGATION POP-UP STREAM BUBBLER RAINBIRD MPR STREAM BUBBLER SQ-B TWO HEADS PER TREE EA. SIDE OF TRUNK	10	-	30	10
A / L-4.2	⊙	POP-UP DRIP INDICATOR -HUNTER ECO-INDICATOR				

	SYMBOL	MANUFACTURER/MODEL/DESCRIPTION
F / L-4.1	▪	RAIN BIRD XCZ-FRBR-COM SERIES CONTROL ZONE KIT-FRSB VALVE WITH PRESSURE REGULATING (40PSI) QUICK-CHECK BASKET FILTERS.
E / L-4.1	◔	RAIN BIRD FESB-R SERIES REMOTE CONTROL VALVES.
B / L-4.1	⊗	MATCO NORCA-755 SERIES SHUT OFF VALVE FULL PORT BALL VALVE
C / L-4.1	◪	BUCKNER SUPERIOR-GCV100NA QUICK COUPLER VALVE 1" NPT, SINGLE SLOT, NP, PURPLE TUFF TOP ACME THREAD

	SYMBOL	MANUFACTURER/MODEL/DESCRIPTION
C-E / L-4.2		PVC CLASS 200 RING-TITE C900 PRESSURE MAINLINE PIPING- 4" SIZE OR AS NOTED- PURPLE N.P. COLOR INSTALL WITH MYLAR/METALIC DETECTION TAPE PER SPEC.
		PVC CLASS 200- NO PRESSURED LATERAL LINE
		PVC SCH. 40 SLEEVE PURPLE N.P.-FOR MAIN OR LATERAL 2X PIPE DIAMETER
		EXISTING PVC MAINLINE. VERIFY LOCATION AND PROTECT IN PLACE.

VALVE KEY

12 HM1 A2.4 1" 20

Body Height
Valve Station # Program
Valve Size
Valve Flow

# PROGRAMS	# BODY HEIGHT OR TYPE
1= TURF	6= 6" POP-UP HEIGHT
2= SHRUB	12= 12" POP-UP HEIGHT
	B= BUBBLER
	R= ROTARY
	D= SUBSURFACE DRIP
	F= FIXED RISER SPRAY

IMPORTANT NOTES:
CONTRACTOR SHALL INSTALL ALL OVERHEAD IRRIGATION SYSTEMS IN ACCORDANCE WITH AB 1881 MUELO STANDARDS. ALL HEADS TO BE PLACED 24" CLEAR OF HARDSCAPE ADJUST FOR FULL HEAD TO HEAD COVERAGE.

CONTRACTOR SHALL PROVIDE ALL WIRE CONDUCTORS & CONDUITS TO CONNECT ALL REMOTE CONTROL VALVE MANIFOLDS TO EXISTING CONTROLLER. CONTRACTOR SHALL INSURE FULL AUTOMATIC OPERATION OF IRRIGATION SYSTEM.

PROJECT IRRIGATION POINT OF CONNECTION AT EXISTING MAINLINE. INSURE PROPER FUNCTION OF EXISTING MASTER VALVE AND FLOW SENSOR WITH NEW IRRIGATION.

10' 5' 0 10' 20'
SCALE 1"=10'-0"

THE LIGHTFOOT PLANNING GROUP
PLANNING SITE DESIGN LANDSCAPE ARCHITECTURE
5900 PASTEUR COURT SUITE 110
CARLSBAD, CA 92008
(760) 692-1924 www.lightfootpg.com

IDENTIFICATION STAMP
DIV. OF THE STATE ARCHITECT
APP. 04-118693 INC:
REVIEWED FOR
SS ☑ FLS ☑ ACS ☑
DATE: 03.13.2020

Revision Date

Consultant
Engineer
wstudiowc
ARCHITECTURE + ENGINEERING
515 Encinitas Blvd, Ste 201, Encinitas, California 92024
Telephone: (760) 634-8880 Fax: (760)452-7341

LICENSED ARCHITECT ROBERT D. WEBB, AIA
C-28036
OCTOBER 31, 2021
STATE OF CALIFORNIA

CHET F. HARRITT ELEM. SCHOOL
LRC & CLASSROOM ADDITION
SANTEE SCHOOL DISTRICT

IRRIGATION PLAN

Drawn: Author
Checked: Checker
Date: August 1, 2019
Job: SSD-CFH-05

L-2.2

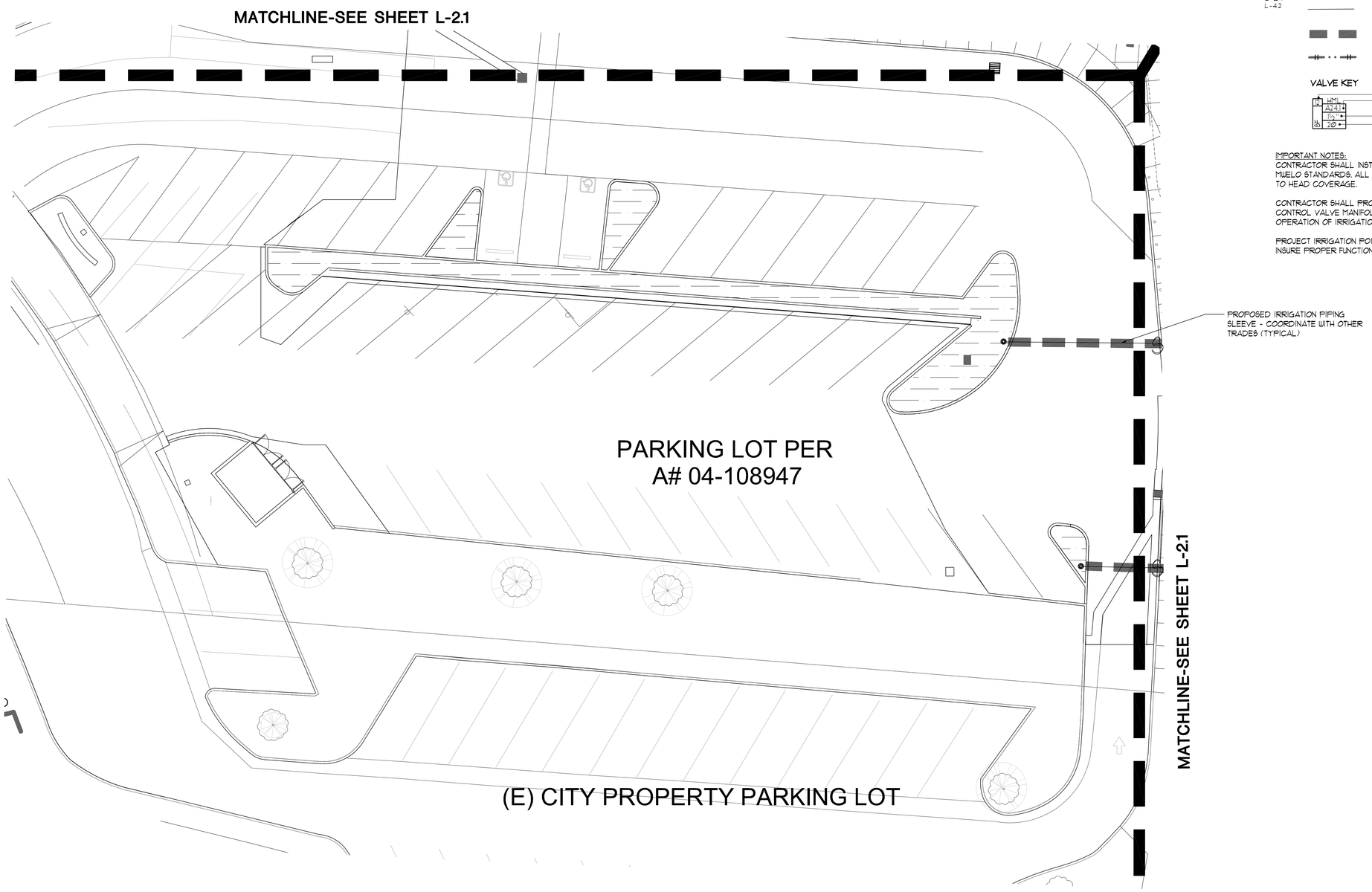

IRRIGATION SCHEDULE

DETAILS	SYMBOL	DESCRIPTION	QTY	PRECIP	PSI	GPM
J-M / L-4.1		SHRUB IRRIGATION SUB-SURFACE DRIPLINE RAINBIRD XFS SERIES .90 GPH AT 12" O.C. LINE SPACING AT 12" O.C.	3,928 S.F.	1.44 in/h	25	59
G,H / L-4.1		SHRUB IRRIGATION ROTARY SPRINKLER HEADS RAINBIRD R-VAN SERIES 8' TO 24' RADIUS HEAD TO HEAD COVERAGE.	3,829 S.F.	.068 in/h	40	27
G,H / L-4.1		SHRUB IRRIGATION OVERHEAD SPRAY HEADS RAINBIRD U-SERIES 5' TO 15' RADIUS HEAD TO HEAD COVERAGE	231.2 S.F.	1.20 in/h	30	3
I / L-4.1	■	TREE IRRIGATION POP-UP STREAM BUBBLER RAINBIRD MPR STREAM BUBBLER SQ-B TWO HEADS PER TREE EA SIDE OF TRUNK	10	-	30	10
A / L-4.2	●	POP-UP DRIP INDICATOR -HUNTER ECO-INDICATOR				

DETAILS	SYMBOL	MANUFACTURER/MODEL/DESCRIPTION
F / L-4.1	▪	RAIN BIRD XCZ-FRBR-COM SERIES CONTROL ZONE KIT-FESB VALVE WITH PRESSURE REGULATING (40PSI) QUICK-CHECK BASKET FILTERS.
E / L-4.1	◔	RAIN BIRD FESB-R SERIES REMOTE CONTROL VALVES.
B / L-4.1	⊗	MATCO NORCA-755 SERIES SHUT OFF VALVE FULL PORT BALL VALVE
C / L-4.1	◪	BUCKNER SUPERIOR-GCV100NA QUICK COUPLER VALVE 1" NPT, SINGLE SLOT, NP, PURPLE TUFF TOP ACME THREAD

SYMBOL	MANUFACTURER/MODEL/DESCRIPTION
C-E / L-4.2	PVC CLASS 200 RING-TITE C900 PRESSURE MAINLINE PIPING- 4" SIZE OR AS NOTED- PURPLE N.P. COLOR INSTALL WITH MYLAR/METALIC DETECTION TAPE PER SPEC.
	PVC CLASS 200- NO PRESSURED LATERAL LINE
	PVC SCH. 40 SLEEVE PURPLE N.P.-FOR MAIN OR LATERAL 2X PIPE DIAMETER
	EXISTING PVC MAINLINE VERIFY LOCATION AND PROTECT IN PLACE.

VALVE KEY

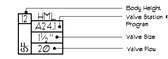

# PROGRAMS	# BODY HEIGHT OR TYPE
1= TURF	6= 6" POP-UP HEIGHT
2= SHRUB	12= 12" POP-UP HEIGHT
	B= BUBBLER
	R= ROTARY
	D= SUBSURFACE DRIP
	F= FIXED RISER SPRAY

IMPORTANT NOTES:
CONTRACTOR SHALL INSTALL ALL OVERHEAD IRRIGATION SYSTEMS IN ACCORDANCE WITH AB 1881 MUELO STANDARDS. ALL HEADS TO BE PLACED 24" CLEAR OF HARDSCAPE ADJUST FOR FULL HEAD TO HEAD COVERAGE.

CONTRACTOR SHALL PROVIDE ALL WIRE CONDUCTORS & CONDUITS TO CONNECT ALL REMOTE CONTROL VALVE MANIFOLDS TO EXISTING CONTROLLER. CONTRACTOR SHALL INSURE FULL AUTOMATIC OPERATION OF IRRIGATION SYSTEM.

PROJECT IRRIGATION POINT OF CONNECTION AT EXISTING MAINLINE.
INSURE PROPER FUNCTION OF EXISTING MASTER VALVE AND FLOW SENSOR WITH NEW IRRIGATION.

10' 5' 0 10' 20'
SCALE 1"=10'-0"

THE LIGHTFOOT PLANNING GROUP
PLANNING SITE DESIGN LANDSCAPE ARCHITECTURE
5900 PASTEUR COURT SUITE 110
CARLSBAD, CA 92008
(760) 692-1924 www.lightfootpg.com

IDENTIFICATION STAMP
DIV. OF THE STATE ARCHITECT
APP. 04-118693 INC:
REVIEWED FOR
SS ☑ FLS ☑ ACS ☑
DATE: 03.13.2020

Revision Date

studiowc
ARCHITECTURE + ENGINEERING
515 Encinitas Blvd, Ste 201, Encinitas, California 92024
Telephone: (760) 634-8880 Fax: (760) 452-7341

LICENSED ARCHITECT
ROBERT D. WEBB, A.I.A.
R D Webb
C-28036
OCTOBER 31, 2021
STATE OF CALIFORNIA

Consultant

Engineer

CHET F. HARRITT ELEM. SCHOOL
LRC & CLASSROOM ADDITION
SANTEE SCHOOL DISTRICT

IRRIGATION PLAN

Drawn: Author
Checked: Checker
Date: August 1, 2019
Job: SSD-CFH-05

L-2.3

PLANT SCHEDULE

TREES	BOTANICAL NAME	COMMON NAME	CONT	SPACING	QTY	DETAIL
	ARBUTUS X 'MARINA'	ARBUTUS MULTI-TRUNK	24"BOX	AS SHOWN	14	F,G,J,K/ L-4.2
	CERCIS CANADENSIS FOREST PANSY' TM	FOREST PANSY REDBUD	24"BOX	AS SHOWN	6	F,G,J,K/ L-4.2
	LAGERSTROEMIA INDICA 'TUSCARORA'	CRAPE MYRTLE	24"BOX	AS SHOWN	6	F,G,J,K/ L-4.2
	LOPHOSTEMON CONFERTUS	BRISBANE BOX	24"BOX	AS SHOWN	6	F,G,J,K/ L-4.2
	MAGNOLIA GRANDIFLORA 'RUSSET'	SOUTHERN MAGNOLIA	48"BOX	AS SHOWN	3	F,G,J,K/ L-4.2
	PODOCARPUS ELONGATUS MONMAL'	ICEE BLUE YELLOW WOOD	24"BOX	AS SHOWN	15	F,G,J,K/ L-4.2
SHRUBS	BOTANICAL NAME	COMMON NAME	SIZE	SPACING	QTY	DETAIL
	DIANELLA CAERULEA 'CLARITY BLUE'	DIANELLA	5 GAL	24" o.c.	618	H,I/ L-4.2
	DIANELLA CAERULEA 'LITTLE BECCA' TM	LITTLE BECCA FLAX LILY	5 GAL	18" o.c.	328	H,I/ L-4.2
	DODONAEA VISCOSA 'PURPUREA'	PURPLE LEAFED HOPSEED BUSH	5 GAL	10' o.c.	4	H,I/ L-4.2
	LANTANA X 'NEW GOLD'	NEW GOLD LANTANA	5 GAL	4' o.c.	34	H,I/ L-4.2
	LOMANDRA PLATINUM BEAUTY (#ROMAI3#) PP25,982	VARIEGATED DWARF MAT RUSH	5 GAL	36" o.c.	78	H,I/ L-4.2
	PENNISETUM X FAIRY TAILS'	EVERGREEN FOUNTAIN GRASS	5 GAL	4' o.c.	124	H,I/ L-4.2
	PITTOSPORUM TOBIRA 'VARIEGATA'	VARIEGATED MOCK ORANGE	5 GAL	5' o.c.	35	H,I/ L-4.2
	RHAPHIOLEPIS INDICA 'CLARA'	INDIAN HAWTHORN	5 GAL	4' o.c.	45	H,I/ L-4.2
	WESTRINGIA FRUTICOSA 'MUNDI' TM	LOW COAST ROSEMARY	5 GAL	4' o.c.	114	H,I/ L-4.2
	TURF SOD KURAPIA	KURAPIA	SOD	AS SHOWN	992 SF	
	DECORATIVE ROCK MULCH 8" MINUS RIVER COBBLE	REFER TO SPECIFICATIONS	3" DP.	AS SHOWN	1004 SF	L/M/ L-4.2

EXISTING
BLDG. C
A# 25955
A# 04-108947

EXISTING LANDSCAPE PROTECT IN PLACE REPAIR & REPLACE IN KIND IF AFFECTED BY CONSTRUCTION ACTIVITIES

CONCRETE MOW CURB (A / L-4.1)

NO PARKING

MATCHLINE-SEE SHEET L-3.2

MATCHLINE-SEE SHEET L-3.3

10' 5' 0 10' 20'
SCALE 1"=10'-0"

THE LIGHTFOOT PLANNING GROUP
PLANNING SITE DESIGN LANDSCAPE ARCHITECTURE
5900 PASTEUR COURT SUITE 110
CARLSBAD, CA 92008
(760) 692-1924 www.lightfootpg.com

IDENTIFICATION STAMP
DIV. OF THE STATE ARCHITECT
APP. 04-118693 INC:
REVIEWED FOR
SS ☑ FLS ☑ ACS ☑
DATE: 03.13.2020

Revision	Date

Consultant

Engineer

studiowc
ARCHITECTURE + ENGINEERING
515 Encinitas Blvd, Ste 201, Encinitas, California 92024
Telephone: (760)753-6800 Fax: (760)452-7341

LICENSED ARCHITECT
ROBERT D. WEBB JR.
C-28036
OCTOBER 31, 2021
STATE OF CALIFORNIA

CHET F. HARRITT ELEM. SCHOOL
LRC & CLASSROOM ADDITION
SANTEE SCHOOL DISTRICT

PLANTING PLAN

Drawn: Author
Checked: Checker
Date: August 1, 2019
Job: SSD-CFH-05

L-3.1

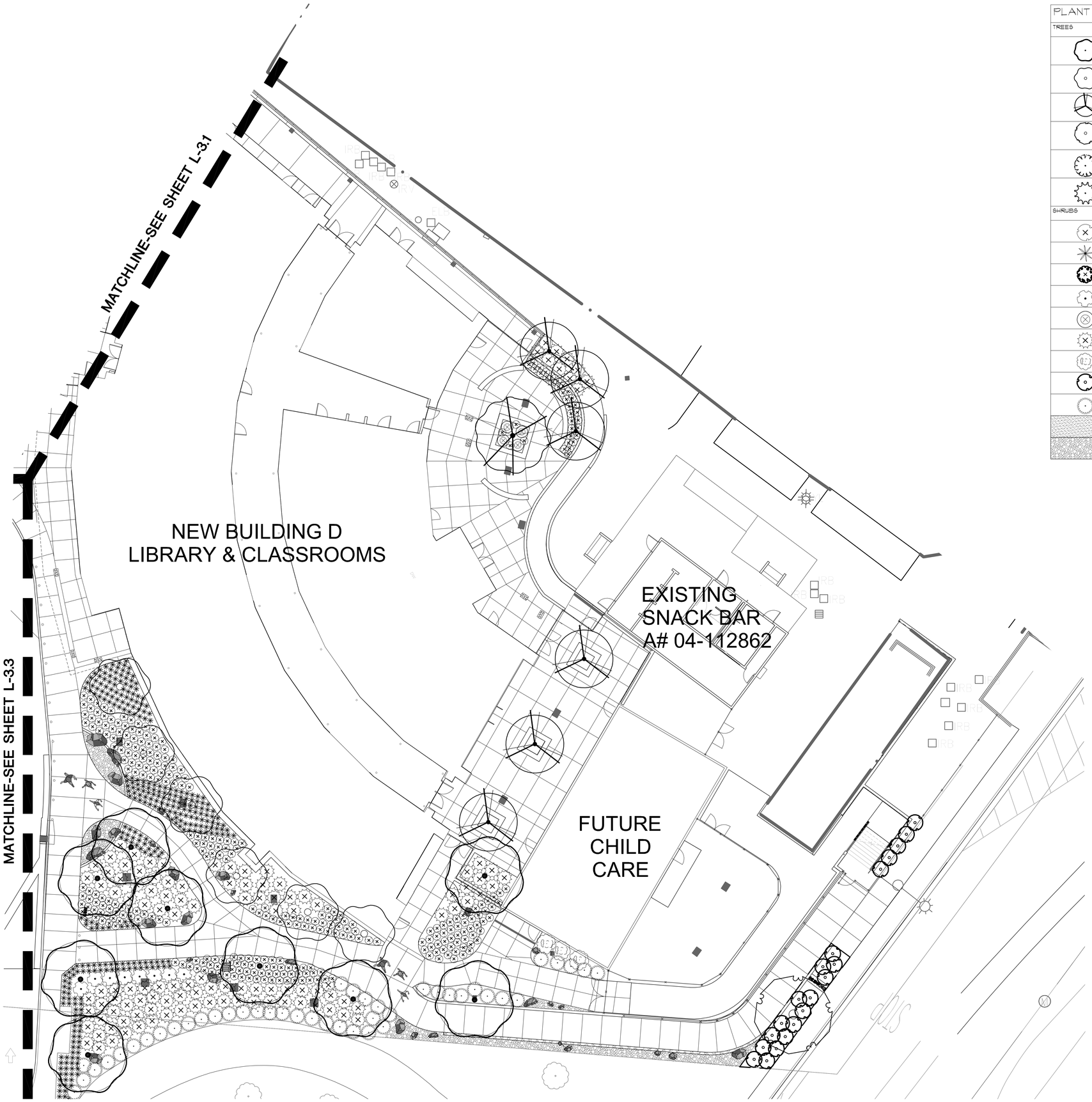

PLANT SCHEDULE

TREES	BOTANICAL NAME	COMMON NAME	CONT	SPACING	QTY	DETAIL
	ARBUTUS X 'MARINA'	ARBUTUS MULTI-TRUNK	24"BOX	AS SHOWN	14	F,G,J,K/ L-4.2
	CERCIS CANADENSIS FOREST PANSY™ TM	FOREST PANSY REDBUD	24"BOX	AS SHOWN	6	F,G,J,K/ L-4.2
	LAGERSTROEMIA INDICA 'TUSCARORA'	CRAPE MYRTLE	24"BOX	AS SHOWN	6	F,G,J,K/ L-4.2
	LOPHOSTEMON CONFERTUS	BRISBANE BOX	24"BOX	AS SHOWN	6	F,G,J,K/ L-4.2
	MAGNOLIA GRANDIFLORA 'RUSSET'	SOUTHERN MAGNOLIA	48"BOX	AS SHOWN	3	F,G,J,K/ L-4.2
	PODOCARPUS ELONGATUS 'MONMAL'	ICEE BLUE YELLOW WOOD	24"BOX	AS SHOWN	15	F,G,J,K/ L-4.2
SHRUBS	BOTANICAL NAME	COMMON NAME	SIZE	SPACING	QTY	DETAIL
	DIANELLA CAERULEA 'CLARITY BLUE'	DIANELLA	5 GAL	24" o.c.	618	H,I/ L-4.2
	DIANELLA CAERULEA 'LITTLE BECCA' TM	LITTLE BECCA FLAX LILY	5 GAL	18" o.c.	328	H,I/ L-4.2
	DODONAEA VISCOSA 'PURPUREA'	PURPLE LEAFED HOPSEED BUSH	5 GAL	10' o.c.	4	H,I/ L-4.2
	LANTANA X 'NEW GOLD'	NEW GOLD LANTANA	5 GAL	4' o.c.	34	H,I/ L-4.2
	LOMANDRA PLATINUM BEAUTY (#ROMAI3#) PP25,982	VARIEGATED DWARF MAT RUSH	5 GAL	36" o.c.	78	H,I/ L-4.2
	PENNISETUM X FAIRY TAILS'	EVERGREEN FOUNTAIN GRASS	5 GAL	4' o.c.	124	H,I/ L-4.2
	PITTOSPORUM TOBIRA 'VARIEGATA'	VARIEGATED MOCK ORANGE	5 GAL	5' o.c.	35	H,I/ L-4.2
	RHAPHIOLEPIS INDICA 'CLARA'	INDIAN HAWTHORN	5 GAL	4' o.c.	45	H,I/ L-4.2
	WESTRINGIA FRUTICOSA 'MUNDI' TM	LOW COAST ROSEMARY	5 GAL	4' o.c.	114	H,I/ L-4.2
	TURF SOD KURAPIA	KURAPIA	SOD	AS SHOWN	992 SF	
	DECORATIVE ROCK MULCH 8" MINUS RIVER COBBLE	REFER TO SPECIFICATIONS	3" DP.	AS SHOWN	1004 SF	L/M/ L-4.2

IDENTIFICATION STAMP
DIV. OF THE STATE ARCHITECT
APP. 04-118693 INC:
REVIEWED FOR
SS ☑ FLS ☑ ACS ☑
DATE: 03.13.2020

Revision	Date

Consultant

Engineer

wstudiowc
ARCHITECTURE + ENGINEERING
515 Encinitas Blvd, Ste 201, Encinitas, California 92024
Telephone: (760)753-6800 Fax: (760)452-7341

LICENSED ARCHITECT
ROBERT D. WEBB, A.I.A.
C-28036
OCTOBER 31, 2021
STATE OF CALIFORNIA

CHET F. HARRITT ELEM. SCHOOL
LRC & CLASSROOM ADDITION
SANTEE SCHOOL DISTRICT

PLANTING PLAN

Drawn: Author
Checked: Checker
Date: August 1, 2019
Job: SSD-CFH-05

L-3.2

10' 5' 0 10' 20'
SCALE 1"=10'-0"

THE LIGHTFOOT PLANNING GROUP
PLANNING SITE DESIGN LANDSCAPE ARCHITECTURE
5900 PASTEUR COURT SUITE 110
CARLSBAD, CA 92008
(760) 692-1924 www.lightfootpg.com

PLANT SCHEDULE

TREES	BOTANICAL NAME	COMMON NAME	CONT	SPACING	QTY	DETAIL
	ARBUTUS X 'MARINA'	ARBUTUS MULTI-TRUNK	24"BOX	AS SHOWN	14	F,G,J,K/ L-4.2
	CERCIS CANADENSIS FOREST PANSY' TM	FOREST PANSY REDBUD	24"BOX	AS SHOWN	6	F,G,J,K/ L-4.2
	LAGERSTROEMIA INDICA 'TUSCARORA'	CRAPE MYRTLE	24"BOX	AS SHOWN	6	F,G,J,K/ L-4.2
	LOPHOSTEMON CONFERTUS	BRISBANE BOX	24"BOX	AS SHOWN	6	F,G,J,K/ L-4.2
	MAGNOLIA GRANDIFLORA 'RUSSET'	SOUTHERN MAGNOLIA	48"BOX	AS SHOWN	3	F,G,J,K/ L-4.2
	PODOCARPUS ELONGATUS 'MONMAL'	ICEE BLUE YELLOW WOOD	24"BOX	AS SHOWN	15	F,G,J,K/ L-4.2
SHRUBS	BOTANICAL NAME	COMMON NAME	SIZE	SPACING	QTY	DETAIL
	DIANELLA CAERULEA 'CLARITY BLUE'	DIANELLA	5 GAL	24" o.c.	618	H,I/ L-4.2
	DIANELLA CAERULEA 'LITTLE BECCA' TM	LITTLE BECCA FLAX LILY	5 GAL	18" o.c.	328	H,I/ L-4.2
	DODONAEA VISCOSA 'PURPUREA'	PURPLE LEAFED HOPSEED BUSH	5 GAL	10' o.c.	4	H,I/ L-4.2
	LANTANA X 'NEW GOLD'	NEW GOLD LANTANA	5 GAL	4' o.c.	34	H,I/ L-4.2
	LOMANDRA PLATINUM BEAUTY ('#ROMAI3#') PP25,982	VARIEGATED DWARF MAT RUSH	5 GAL	36" o.c.	78	H,I/ L-4.2
	PENNISETUM X FAIRY TAILS'	EVERGREEN FOUNTAIN GRASS	5 GAL	4' o.c.	124	H,I/ L-4.2
	PITTOSPORUM TOBIRA 'VARIEGATA'	VARIEGATED MOCK ORANGE	5 GAL	5' o.c.	35	H,I/ L-4.2
	RHAPHIOLEPIS INDICA 'CLARA'	INDIAN HAUTHORN	5 GAL	4' o.c.	45	H,I/ L-4.2
	WESTRINGIA FRUTICOSA 'MUNDI' TM	LOW COAST ROSEMARY	5 GAL	4' o.c.	114	H,I/ L-4.2
	TURF SOD KURAPIA	KURAPIA	SOD	AS SHOWN	9921 SF	
	DECORATIVE ROCK MULCH 8" MINUS RIVER COBBLE	REFER TO SPECIFICATIONS	3" DP.	AS SHOWN	1004 SF	L/M/ L-4.2

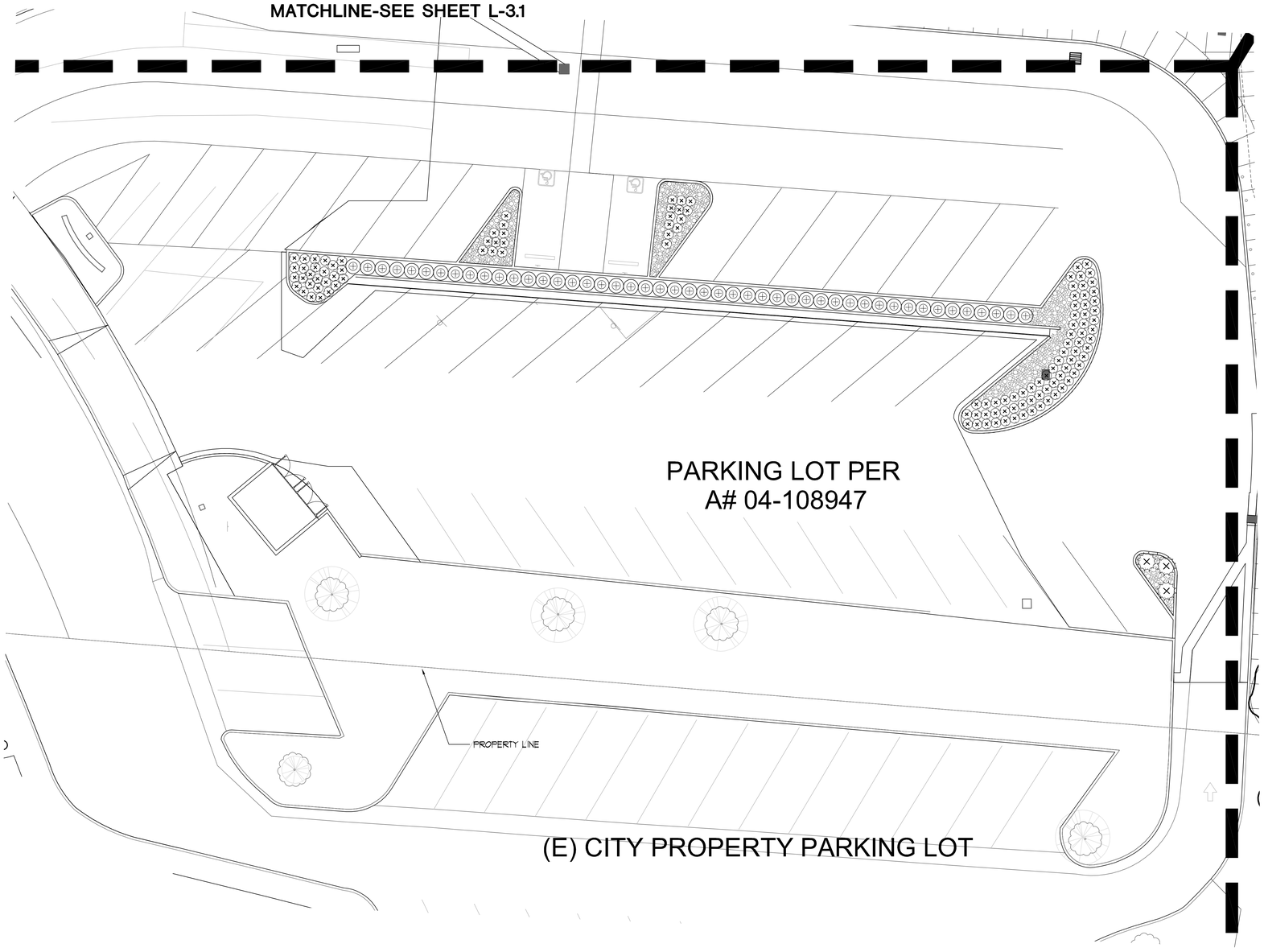

10' 5' 0 10' 20'

SCALE 1"=10'-0"

THE LIGHTFOOT PLANNING GROUP
PLANNING SITE DESIGN LANDSCAPE ARCHITECTURE
5900 PASTEUR COURT SUITE 110
CARLSBAD, CA 92008
(760) 692-1924 www.lightfootpg.com

IDENTIFICATION STAMP
DIV. OF THE STATE ARCHITECT
APP. 04-118693 INC:
REVIEWED FOR
SS ☑ FLS ☑ ACS ☑
DATE: 03.13.2020

Revison	Date

Consultant

Engineer

studiowc
ARCHITECTURE + ENGINEERING
515 Encinitas Blvd, Ste 201, Encinitas, California 92024
Telephone: (760) 634-8880 Fax: (760) 452-7341

LICENSED ARCHITECT
ROBERT D. WEBB, A.I.A.
R D Webb
C-28036
OCTOBER 31, 2021
STATE OF CALIFORNIA

CHET F. HARRITT ELEM. SCHOOL
LRC & CLASSROOM ADDITION
SANTEE SCHOOL DISTRICT

PLANTING PLAN

Drawn: Author
Checked: Checker
Date: August 1, 2019
Job: SSD-CFH-05

L-3.3

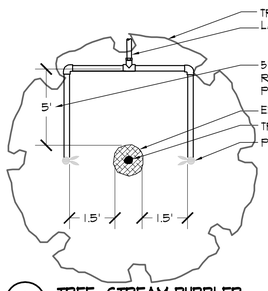

NOTE:
DO NOT ALLOW ANY SPRAY TO CONTACT THE TRUNK OR ROOT FLARE OF THE TREE.

AVOID SPRAYING ONTO BREATHER TUBE(S).

SEE PLANTING PLAN FOR SPECIFIC STREET TREE LOCATIONS AND IRRIGATION PLANS.

I TREE STREAM BUBBLER

SCALE: 1/4"=1'-0"

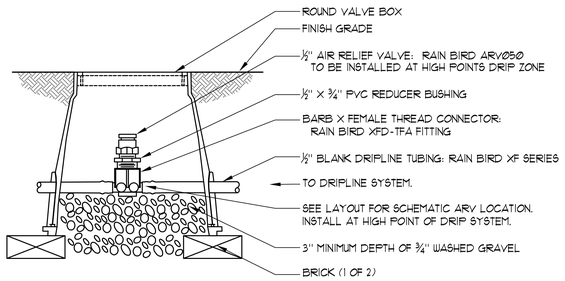

J AIR RELIEF VALVE

SCALE: NTS

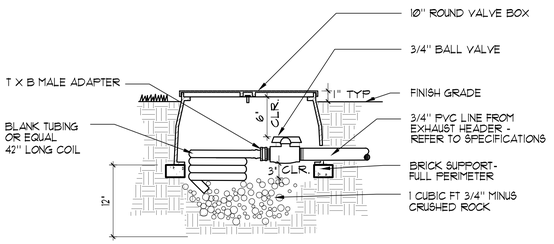

K MANUAL FLUSH VALVE

SCALE: NTS

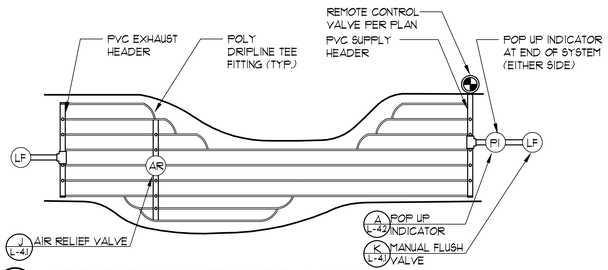

L TEARDROP/ UNDULATEING DRIP LAYOUT

SCALE: NTS

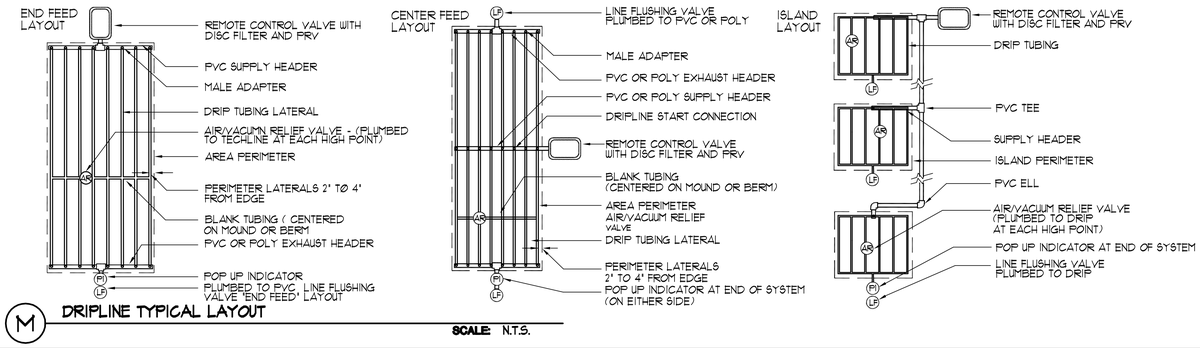

M DRIPLINE TYPICAL LAYOUT

SCALE: N.T.S.

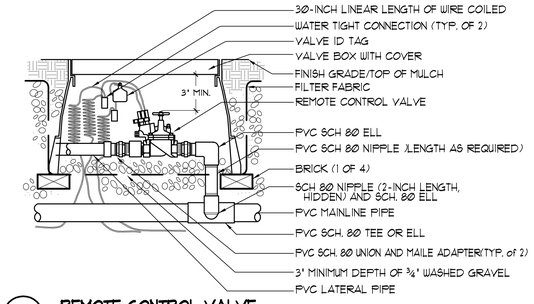

E REMOTE CONTROL VALVE

SCALE: N.T.S

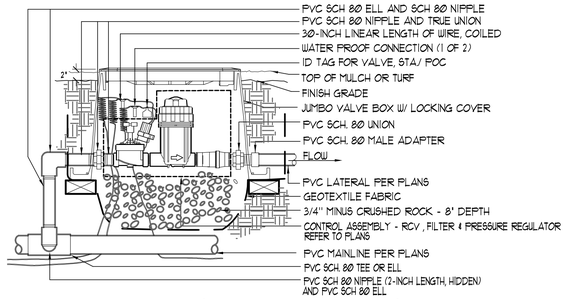

F DRIP VALVE ASSEMBLY- (RCV, REGULATOR, FILTER)

SCALE: 1"=1'-0"

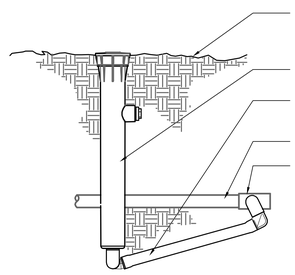

G 12" POP UP SPRAY HEAD

SCALE: 3"=1'-0"

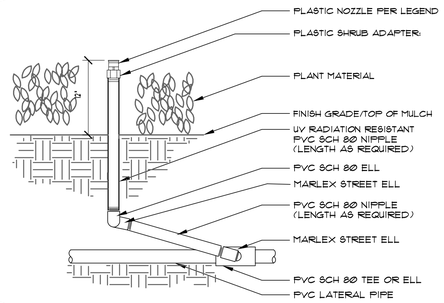

H FIXED RISER SPRAY HEAD

SCALE: N.T.S.

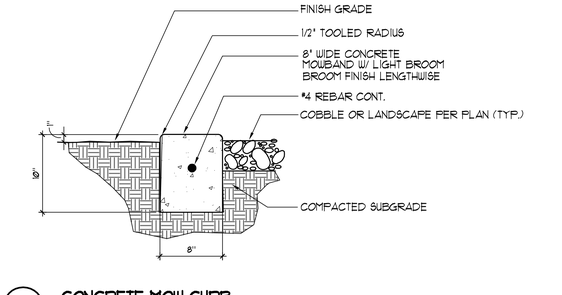

A CONCRETE MOW CURB

SCALE: 1-1/2"=1'-0"

B BRASS BALL VALVE

SCALE: 1"=1'-0"

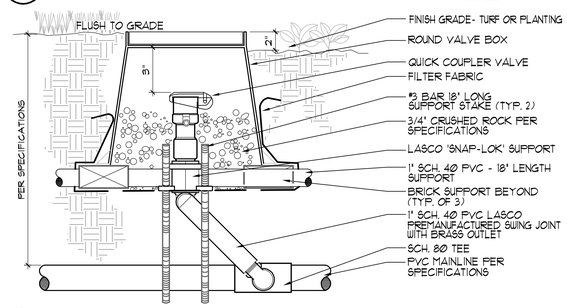

C QUICK COUPLER & SNAP-LOK SUPPORT

SCALE: NO SCALE

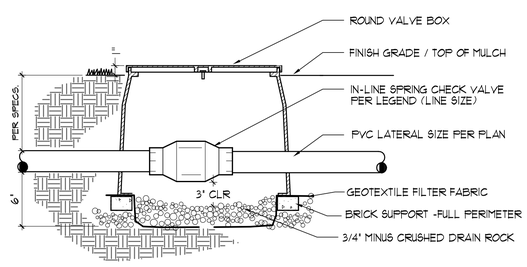

D SPRING CHECK VALVE

SCALE: 1"=1'-0"

THE LIGHTFOOT PLANNING GROUP
PLANNING
5900 PASTEUR COURT SUITE 110
CARLSBAD, CA 92008
(760) 692-1924 www.lightfootpg.com
SITE DESIGN LANDSCAPE ARCHITECTURE

IDENTIFICATION STAMP
DIV. OF THE STATE ARCHITECT
APP. 04-118693 INC:
REVIEWED FOR
SS ☑ FLS ☑ ACS ☑
DATE: 03.13.2020

Revision | Date

Consultant

Engineer

studiowc
ARCHITECTURE + ENGINEERING
515 Encinitas Blvd, Ste 201, Encinitas, California 92024
Telephone: (760) 634-8880 Fax: (760) 452-7341

LICENSED ARCHITECT ROBERT D. WEBB, A.I.A. R.D.Webb C-28036 OCTOBER 31, 2021 STATE OF CALIFORNIA

CHET F. HARRITT ELEM. SCHOOL
LRC & CLASSROOM ADDITION
SANTEE SCHOOL DISTRICT

LANDSCAPE DETAILS

Drawn: Author
Checked: Checker
Date: August 1, 2019
Job: SSD-CFH-05

L-4.1

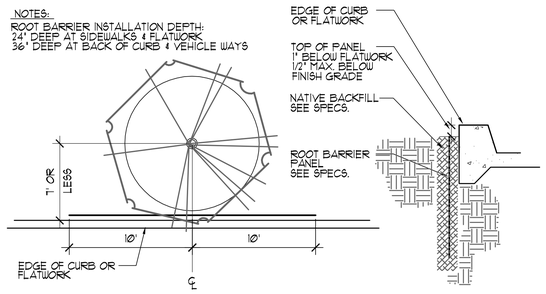

J ROOT BARRIER

SCALE: 1/4"=1'-0"

INSTALL PERFORATED TUBES ON ALL TREES AND PALMS PER THE FOLLOWING SCHEDULE

CONTAINER SIZE	QTY.	PIPE DIA.
1# 5 GALLON	NONE	NONE
15 GALLON	1	3"
24"BOX	2	3"
36" BOX	2	4"
48" BOX	3	3"
60" BOX & LARGER	4	4"
B&B PALMS	4	4"

BREATHER TUBE INSTALLATION OR REDUCTION IN QTY. MAY NOT BE OMITTED FROM CONTRACT EXCEPT BY WRITTEN AUTHORIZATION BY THE LANDSCAPE ARCHITECT

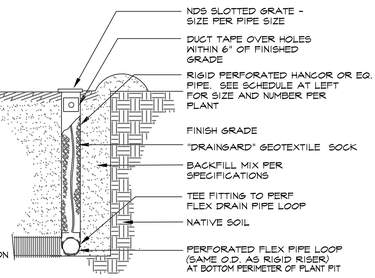

K BREATHER TUBE

SCALE: NTS

NOTES: COBBLE BED TO BE DRESSED FROM SURROUNDING GRADE. APPLY PRE-EMERGENT HERBICIDE TO SOIL PRIOR TO INSTALLING GEOTEXTILE FABRIC.

SUBMIT COBBLE SAMPLES FOR REVIEW PRIOR TO INSTALLATION

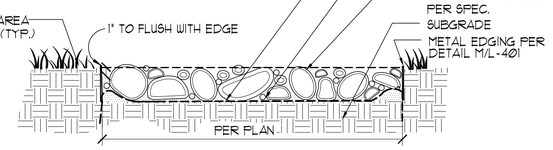

L COBBLE MULCH

SCALE: 1½"=1'-0"

ISOMETRIC VIEW: N.T.S.

SIZE: 3/16" X 8'

COLOR: (MF) MILL FINISH-SILVER

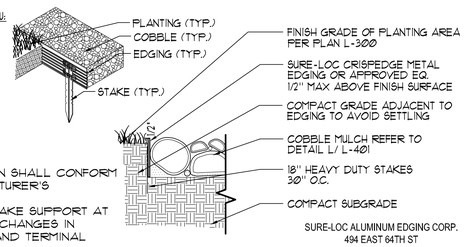

NOTES:
1. INSTALLATION SHALL CONFORM TO MANUFACTURER'S GUIDELINES.
2. PROVIDE STAKE SUPPORT AT 30" O.C., AT CHANGES IN DIRECTION AND TERMINAL POINTS.
3. INSURE PROPER LOCKING FIT OF STAKE SUPPORT MINIMUM OF 1/2"BELOW TOP OF EDGING.

SURE-LOC ALUMINUM EDGING CORP.
494 EAST 64TH ST
HOLLAND, MI 49423
TOLL FREE: 1-800-787-3562
PHONE: (616) 392-3209
FAX: (616) 392-5134
www.surelocedging.com

M METAL EDGING

SCALE: NTS

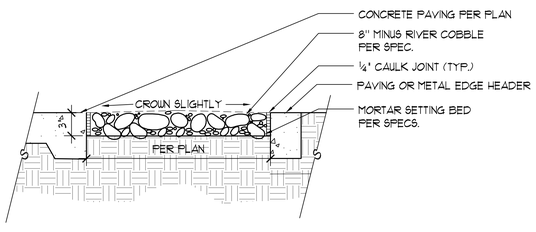

N MORTARED DECORATIVE COBBLE

SCALE: 1-1/2"=1'-0"

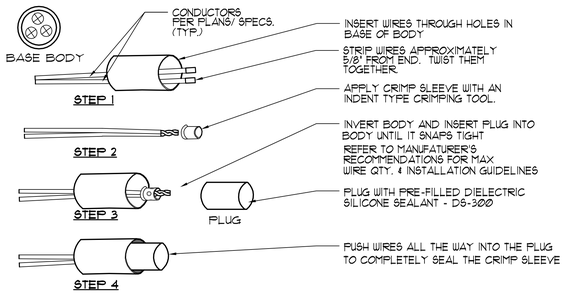

E WIRE CONNECTOR - DS 400

SCALE: 1"=1"

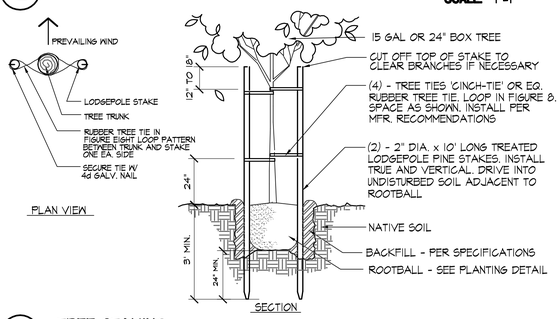

F TREE STAKING

SCALE: 1"=1'-0"

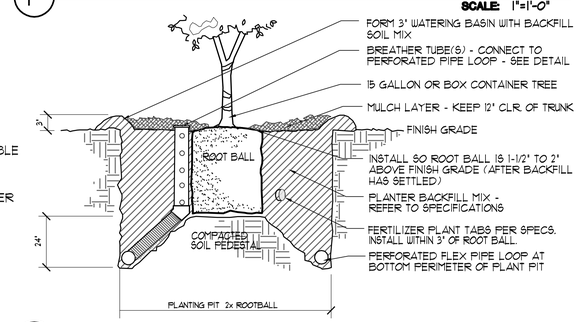

G 15 GALLON OR BOX TREE INSTALLATION

SCALE: 1"=1'-0"

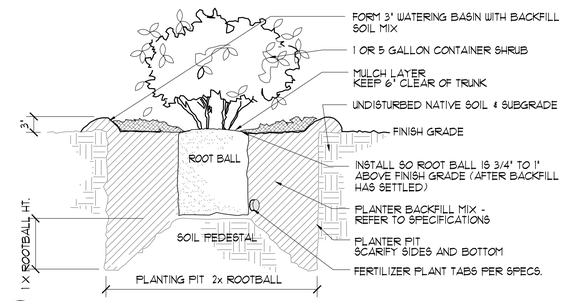

H 1 OR 5 GALLON SHRUB INSTALLATION

SCALE: 1"=1'-0"

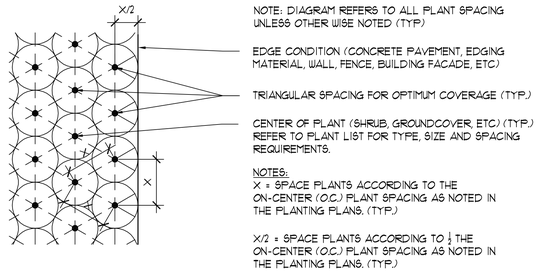

I TRIANGULAR SPACING DIAGRAM

SCALE: 3/4" = 1'-0"

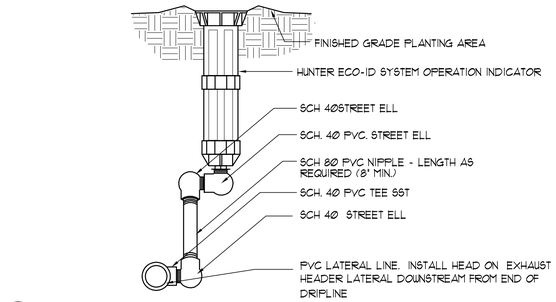

A 6" POP UP DRIP SYSTEM OPERATION INDICATOR

SCALE: N.T.S.

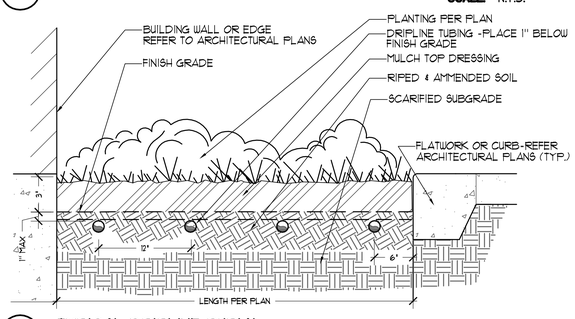

B TYPICAL DRIPLINE BURIAL

SCALE: 1-1/2"=1'-0"

IMPORTANT NOTES:
1. DEPTH OF COVER SHALL CONFORM TO CITY STANDARDS
2. PIPING AND CONDUIT SHALL BE SLEEVED UNDER ALL HARDSCAPE SLEEVES SHALL BE 2X PIPE/CONDUIT DIA.
3. NO OTHER TRADE WORK SHALL BE ALLOWED IN TRENCH

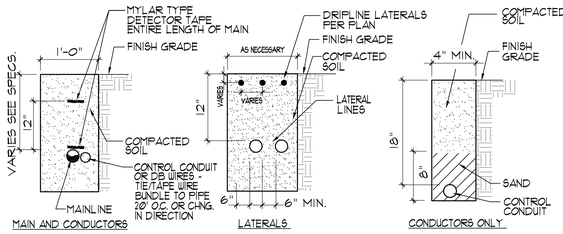

C TRENCHING DETAIL

SCALE: NO SCALE

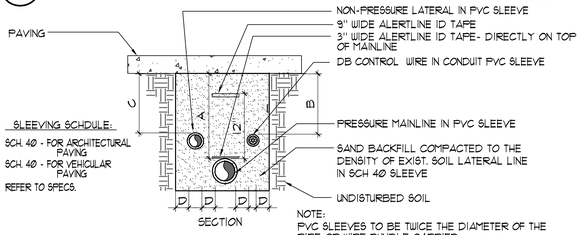

NOTE:
PVC SLEEVES TO BE TWICE THE DIAMETER OF THE PIPE OR WIRE BUNDLE CARRIED.
PROVIDE A MARK SHOWING WHERE SLEEVE UNDER PAVING ENDS & INSTALL 9" VALVE BOX IN SOFTSCAPE ALL SLEEVES UNDER BROW DITCHES SHALL BE CONCRETE ENCASED - 6" THICK ALL SIDES

DIMENSION	A	B	C	D
1/2" TO 4" DIA PIPE SIZE	24"	24"	24"	6"

D SLEEVE INSTALLATION

SCALE: NTS

IDENTIFICATION STAMP
DIV. OF THE STATE ARCHITECT
APP. 04-118693 INC:
REVIEWED FOR
SS ☑ FLS ☑ ACS ☑
DATE: 03.13.2020

Revision	Date

Consultant

Engineer

studiowc
ARCHITECTURE + ENGINEERING
515 Encinitas Blvd, Ste 201, Encinitas, California 92024
Telephone: (760) 634-8880 Fax: (760)452-7341

LICENSED ARCHITECT
ROBERT D. WEBB, A.I.A.
C-28036
OCTOBER 31, 2021
STATE OF CALIFORNIA

CHET F. HARRITT ELEM. SCHOOL
LRC & CLASSROOM ADDITION
SANTEE SCHOOL DISTRICT

LANDSCAPE DETAILS

Drawn: Author
Checked: Checker
Date: August 1, 2019
Job: SSD-CFH-05

L-4.2

THE LIGHTFOOT PLANNING GROUP
PLANNING
5900 PASTEUR COURT SUITE 110
CARLSBAD, CA 92008
(760) 692-1924 www.lightfootpg.com
SITE DESIGN LANDSCAPE ARCHITECTURE

OVERALL SITE PLAN | 1" = 30'-0" | 1

SITE PLAN ACCESS LEGEND

- PROPERTY LINE / ASSUMED PROPERTY LINE "APL"
- EXISTING ACCESSIBLE PATH OF TRAVEL, PER 04-110216
- NEW ACCESSIBLE PATH OF TRAVEL

B — BOYS RESTROOM

G — GIRLS RESTROOM

A — ALL GENDER RESTROOM

DF — DRINKING FOUNTAIN

IDENTIFICATION STAMP
DIV. OF THE STATE ARCHITECT
APP. 04-118693 INC:
REVIEWED FOR
SS ☑ FLS ☑ ACS ☑
DATE: 03.13.2020

ACCESS COMPLIANCE NOTES

DESIGN PROFESSIONAL IN GENERAL RESPONSIBLE CHARGE STATEMENT:

THE ACCESSIBLE PATH OF TRAVEL (P.O.T.) AS INDICATED IN THESE CONSTRUCTION DOCUMENTS IS COMPLIANT WITH THE CURRENT APPLICABLE CALIFORNIA BUILDING CODE ACCESSIBILITY PROVISIONS FOR PATH OF TRAVEL REQUIREMENTS FOR ALTERATIONS, ADDITIONS AND STRUCTURAL REPAIRS. AS PART OF THE DESIGN OF THIS PROJECT, THE P.O.T. WAS EXAMINED AND ANY ELEMENTS, COMPONENTS OR PORTIONS OF THE P.O.T. THAT WERE DETERMINED TO BE NONCOMPIANT 1) HAVE BEEN IDENTIFIED AND 2) THE CORRECTIVE WORK NECESSARY TO BRING THEM INTO COMPLIANCE HAS BEEN INCLUDED WITHIN THE SCOPE OF THIS PROJECT'S WORK THROUGH DETAILS, DRAWINGS AND SPECIFICATIONS INCORPORATED INTO THESE CONSTRUCTION DOCUMENTS. ANY NONCOMPLIANT ELEMENTS, COMPONENTS OR PORTIONS OF THE P.O.T. THAT WILL NOT BE CORRECTED BY THIS PROJECT BASED ON VALUATION THRESHOLD LIMITATIONS OR FINDING OF UNREASONABLE HARDSHIP ARE SO INDICATED IN THESE CONTRUCTION DOCUMENTS.

DURING CONSTRUCTION, IF THE P.O.T. ITEMS WITHIN THE SCOPE OF THE PROJECT REPRESENTED AS CODE COMPLIANT ARE FOUND TO BE NONCONFORMING BEYOND REASONABLE CONSTRUCTION TOLERANCES, THEY SHALL BE BROUGHT INTO COMPLIANCE WITH THE CBC AS A PART OF THIS PROJECT BY MEANS OF A CONSTRUCTION CHANGE DOCUMENT.

OPENINGS IN GRATINGS AT DRAINS LOCATED IN THE SURFACE OF ANY PEDESTRIAN WAYS OF TRAVEL, SHALL BE LIMITED TO 1/2" MAX.

ALL BUILDINGS CONTAIN ACCESSIBLE PLUMBING FIXTURES. REFER TO FLOOR PLANS FOR EXACT LOCATIONS.

GATES IN THE PATH OF TRAVEL SHALL COMPLY WITH EXIT DOOR REQUIREMENTS PER CBC SECTION 11B-404

CODE ANALYSIS

NEW CLASSROOM BUILDING D

CONSTRUCTION TYPE		VB
SPRINKLERED		YES
OCCUPANCY		MIXED: E / A3 / B
# OF STORIES		1
ACTUAL AREA		16,975 SF
	E: 14,452 SF	
	A3: 2,050 SF	
	B: 473 SF	
ALLOWABLE AREA		
	E: 38,000 SF	
	A3: 24,000 SF	
	B: 36,000 SF	

MIXED OCCUAPNCY ANALYSIS

E		A3		B	
14452 / 38000	+	2050 / 24000	+	473 / 36000	= 0.56 (LESS THAN 1)

EXISTING CLASSROOM BUILDING C: 04-108947 - FOR REFERENCE ONLY

OCCUPANCIES: E-1 & B
OCCUPANCY SEPARATION: NOT REQUIRED PER CBC TABLE 3B
HALLWAYS: NOT REQUIRED PER CBC SECTION 10043.43
BUILDING TYPE: TYPE V-NR
TOTAL BUILDING AREA: 10,595 + 1,738 = 12,333 S.F.
E-1 OCC. AREA: 1,738 + 8,169 = 9,907 SF
B OCC AREA: = 2,426 SF
12,333 SF
ALLOWABLE AREA - TABLE 5B:
E-1 9,100 S.F.
B 8,000 S.F.
STORIES: 1
SPRINKLERED: NO
SIDEYARDS: 2 @ 20' (1X) PER CBC SECTION 505.13
TRAVEL DISTANCE: LESS THAN 50' (1X) PER CBC SECTION 1004.2.5, 1007.3.3.2
ALLOWABLE AREA INCREASES PER CBC SECTION 305, 505, 506:
GROUP E-1
TRAVEL DISTANCE: 9,100 S.F. X .5 = 4,550 S.F.
ALLOWABLE AREA: (9,100 + 4,500) S.F. = 13,650 S.F.
SIDEYARDS: (9,100 + 4,500) S.F. X (20' X 0.125) = 3,412.5 S.F.

GROUP B
TRAVEL DISTANCE: N/A
SIDEYARDS: (8,000) S.F. X (20' X .0125) = 2,000 S.F.

AREA	9,907	2,426	=	.823 IS LESS THAN 1.0 (AREA OK)
ALLOWABLE AREA	17,063	10,000		

EXISTING SNACK BAR BUILDING: 04-112862 - FOR REFERENCE ONLY

CONSTRUCTION TYPE	VB
SPRINKLERED	NO
OCCUPANCY	B
# OF STORIES	1
ACTUAL AREA	960 SF
ALLOWABLE AREA	9,000 SF

PARKING SPACE COUNT

TOTAL STALLS:	42
STANDARD STALLS:	40
ACCESSIBLE STALLS PROVIDED:	2 (INLCUDING 1 VAN)

Revison | Date

Consultant

Engineer

studiowc
ARCHITECTURE + ENGINEERING
515 Encinitas Blvd, Ste 201, Encinitas, California 92024
Telephone: (760) 634-8800 Fax: (760) 452-7541

LICENSED ARCHITECT
ROBERT D. WEBB
R.D. Webb
C-28036
OCTOBER 31, 2021
STATE OF CALIFORNIA

CHET F. HARRITT ELEM. SCHOOL
LRC & CLASSROOM ADDITION
SANTEE SCHOOL DISTRICT

OVERALL SITE PLAN

Drawn: Author
Checked: Checker
Date: OCTOBER 18, 2019
Job: SSD-CFH-05

A0.1

FIRE ACCESS SITE PLAN | 1" = 30'-0" | 1

FIRE ACCESS LEGEND

- EXISTING FIRE LANE
- NEW ASPHALT FIRE LANE
- NEW CONCRETE FIRE LANE
- FH — EXISTING FIRE HYDRANT
- NEW PIV / FDC
- NEW FDC/DDC

GENERAL NOTES

1. EXISTING FIRE LANE - DSA 04-112862.

2. CONCRETE PAVEMENT - FIRE LANE - 6" PORTLAND CEMENT CONCRETE OVER 13" AGGREGATE BASE, COMPACTED TO 95% ASTM 1557D, OVER 12" OVER COMPACTED SUBGRADE COMPACTED TO 95% OF ASTM 1557D. CONCRETE SHALL HAVE #4'S AT 12" O.C.

3. ASPHALTIC PAVEMENT - FIRE LANE - 4" ASPHALTIC CONCRETE OVER 13" AGGREGATE BASE, COMPACTED TO 95% ASTM 1557D, OVER 12" OV COMPACTED SUBGRADE COMPACTED TO 95% OF ASTM 1557D

4. FOR FIRE LANE MARKINGS, SEE DETAIL 14/A10.1

FIRE FLOW RESULTS

Flow Test Results	
Hydrant Number[1]	159
Static Pressure (PSI)[2]	134
Residual Pressure at Fire Flow (PSI)[2]	127
Model Flow (GPM) at 20 PSI Residual[2]	15,356
Certified Flow (GPM) at 20 PSI Residual restricted by 10 ft/sec max velocity[3]	6,264

1. *See plat attached*
2. *Information obtained using a computer model*
3. *Results are valid for 6 months*

NEW BUILDING FIRE FLOW REQUIREMENT:

SPRINKLER, TYPE VB, REQUIRED FIRE FLOW 3500 GPM X .25 + 875GPM

DSA **810**

FIRE & LIFE SAFETY SITE CONDITIONS SUBMITTAL

To facilitate the Division of the State Architect's (DSA) fire and life safety plan review of project site conditions, DSA requires the design professional to provide the following information at time of project submittal for projects consisting of construction of a new campus, construction of new building(s), additions to existing buildings, and for site alternate design means for fire department emergency vehicle access, and fire suppression water supply.

Information associated with compliance items 1–3 below is to be provided for all project types indicated above. Information associated with items 4–7 is to be completed when an alternate means is utilized. Acknowledgement by the school district and signature from the local fire authority (LFA) is only required when an alternate design means is being requested.

Page 1 of the completed form must be imaged onto the fire access site plan. When an alternate design/means is proposed, completed pages 1 and 2 are to be imaged on the fire access site plan.

For additional information refer to the instructions at the end of this form and DSA Policy 09-01.

PROJECT INFORMATION	
School District/Owner:	SANTEE SCHOOL DISTRICT
Project Name/School:	CHET F. HARRITT SCHOOL - LRC & CLASSROOM ADDITION
Project Address:	8120 ARLETTE ST., SANTEE, CA 92071

FIRE & LIFE SAFETY INFORMATION				
1.	Has a fire hydrant flow test been performed within the past 12 months? *(If yes, provide a copy of the test data.)*	Yes ☒		No ☐
2.	Was the fire hydrant water flow test performed as part of this LFA review?	Yes ☒		No ☐
3.	Is the project located within a designated fire hazard severity zone as established by Cal-Fire? *(If yes, indicate fire hazard zone classification below)*	Yes ☐		No ☒
	Refer to the following for fire hazard zone locations: www.fire.ca.gov/fire_prevention/fire_prevention_wildland_zones_maps	Moderate ☐	High ☐	Very High ☐
	Wildland Interface Area (WIFA) *(If any designations are checked, project design must meet the requirements of GBC Chapter 7A.)*			WIFA ☐

CONDITION MEANS AND METHODS RESOLUTION		ALTERNATE ACCEPTED:			
		Yes	No	N/A	N/R
4.	Emergency vehicle access roadways do not meet CFC requirements.	☒		☒	
4a.	**Acceptable Alternate:** Emergency vehicle and personnel access as proposed by the project architect is acceptable for providing fire suppression and protection of life and property.	☒			
5.	**Fire Hydrants:** Number and spacing does not meet CFC requirements.				
5a.	**Acceptable Alternate:** Number of fire hydrants and spacing as proposed by the project architect is acceptable for fire suppression and protection of life and property.	☒			
6.	**Fire Hydrants:** Water flow and pressure are less than CFC minimum.				
6a.	**Acceptable Alternate:** The available flow and pressure is acceptable for providing fire suppression and protection of life and property.	☒			
7.	Location of fire department connection(s) serving fire sprinkler systems or standpipe systems does not meet CFC requirements.				
7a.	**Acceptable Alternate:** The location of fire department connection serving the fire sprinkler system and/or standpipe system is acceptable for providing fire suppression and protection of life and property.	☒			

DSA 810 (rev 10-22-18) DIVISION OF THE STATE ARCHITECT — DEPARTMENT OF GENERAL SERVICES — Page 1 of 4 STATE OF CALIFORNIA

DSA 810
FIRE & LIFE SAFETY SITE CONDITIONS SUBMITTAL

School District Acceptance of Acceptable Design Alternates

By signing this form, the school district acknowledges and accepts the proposed design as an alternative to California Building Code (CBC) and California Fire Code (CFC) minimum requirements, as indicated by one or more of the conditions indicated at items 4a, 5a, 6a or 7a, for providing fire and life safety protection of life and property.

Accepted by: Christian Becker — Title: DIR. Const. & Facilities

Signature: [signature] — Date: 1-27-20

LOCAL FIRE AUTHORITY (LFA) INFORMATION	
LFA Agency Name:	Santee Fire
LFA Review Official:	Carisa Hoffman
Title:	Fire Marshal
Work E-mail:	choffman@cityofsanteeca.gov

NOTE: NO ALTERNATE EMERGENCY VEHICLE ACCESS ROAD

DSA 810 (rev 10-22-18) DIVISION OF THE STATE ARCHITECT — DEPARTMENT OF GENERAL SERVICES — Page 2 of 4 STATE OF CALIFORNIA

IDENTIFICATION STAMP
DIV. OF THE STATE ARCHITECT
APP. 04-118693 INC:
REVIEWED FOR
SS ☑ FLS ☑ ACS ☑
DATE: 03.13.2020

Revison	Date

Consultant

Engineer

studiowc
ARCHITECTURE + ENGINEERING
515 Encinitas Blvd, Ste. 201, Encinitas, California 92024
Telephone: (760)753-6800 Fax: (760)452-7541

LICENSED ARCHITECT — RANDY D. WITZ — C-28036 — REGISTERED — STATE OF CALIFORNIA

CHET F. HARRITT ELEM. SCHOOL
LRC & CLASSROOM ADDITION
SANTEE SCHOOL DISTRICT

OVERALL FIRE ACCESS PLAN

Drawn: Author
Checked: Checker
Date: OCTOBER 18, 2019
Job: SSD-CFH-05

A0.2

DEMO LEGEND

SAWCUT EXISTING ASPHALT AND DISPOSE IN ACCORDANCE WITH CITY OF SANTEE AND COUNTY OF SAN DIEGO ENVIRONMENTAL REGULATIONS. ASPHALT IS 7" THICK WITH POSSIBLE PETROMAT. EXISTING 5" BASE SHALL BE PROTECTED IN PLACE, SCARAFIED AND RECOMPACTED TO 95% OF ASTM 1557D.

DEMO EXISTING CONCRETE WITH REBAR (ASSUME 5" MIN.) INCLUDING TRUNCATED DOMES. DISPOSE IN ACCORDANCE WITH CITY OF SANTEE AND COUNTY OF SAN DIEGO REGULATIONS.

DEMO EXISTING LANDSCAPING. DISPOSE IN ACCORDANCE WITH CITY OF SANTEE AND COUNTY OF SAN DIEGO REGULATIONS.CAP AND REMOVE IRRIGATION AS REQUIRED.

SAWCUT EXISTING CURB AND/OR CURB AND GUTTER. DISPOSE IN ACCORDANCE WITH CITY OF SANTEE AND COUNTY OF SAN DIEGO REGULATIONS.

GENERAL NOTES

1. ALL ITEMS INDICATED FOR REMOVAL SHALL BE REMOVED COMPLETELY, INCLUDING ALL FOUNDATIONS, TREE ROOTS, ELECTRICAL BOXES, CONDUITS, ETC. ALL ITEMS SHALL BE PROPERLY DISPOSED OF IN ACCORDANCE WITH THE CITY OF SANTEE AND COUNTY OF SAN DIEGO ENVIRONMENTAL AND TRANSPORTATION REGULATIONS.

2. REMOVE ALL IRRIGATION WITHIN THE BUILDING/GRADING FOOTPRINT. POTHOLE AND TRACK EXISTING IRRIGATION AT ALL BOUNDARY POINTS. PROVIDE TEMPORARY IRRIGATION TO ALL EXISTING PLANTERS DURING CONSTRUCTION TO MAINTAIN LANDSCAPING IN GOOD CONDITION UNTIL FINAL LANDSCAPING AND IRRIGATION IS COMPLETED.

3. UTILITY LINES TO BE CAPPED AND REMOVED FROM NEW BLDG, LANDSCAPE AND PAVEMENT AREAS UNLESS NOTED OTHERWISE.

4. ALL DEMOLITION SHALL COMPLY WITH CH.33 CBC AND ARTICLE 33 CFC.

KEYNOTES

101	EXISTING MODULAR BUILDINGS TO BE REMOVED BY DISTRICT. CONTRACTOR TO REMOVE REMAINING CONCRETE FOUNDATIONS AND UTILITIES.
102	EXISTING MODULAR BUILDING AND WOOD FOUNDATIONS TO BE REMOVED BY DISTRICT.
103	EXISTING BATTING CAGE TO BE REMOVED BY DISTRICT. CONTRACTOR TO REMOVE REMAINING FENCE POST FOOTINGS AND UNDERLYING ASPHALT, COMPLETE. ASPHALT THICKNESS IS 4". SEE ELECTRICAL FOR DISCONNECT AND RECONNECT.
104	EXISTING SHADE STRUCTURE CANOPY, POSTS, AND FOUNDATIONS TO BE REMOVED BY DISTRICT
105	REMOVE EXISTING TREE, COMPLETE, INCLUDING ALL ROOTS. TREES VARY FROM 6" TO 24" DIAMETER. DISPOSE.
106	REMOVE EXISTING BUSHES, COMPLETE, INCLUDING ROOTS. DISPOSE
107	REMOVE EXISTING GUARD POSTS (5), COMPLETE. DISPOSE
108	RAISE EXISTING WATER BOX TO GRADE. PROVIDE NEW CONCRETE COLLAR.
109	REMOVE EXISTING CURB, RAMP AND TRUNCATED DOMES
110	SAWCUT AND REMOVE EX. CURB AND GUTTER
111	REMOVE EXISTING CATCH BASIN AND PROVIDE NEW MANHOLE OR CLEAN OUT AS INDICATED ON CIVIL PLANS
112	EXISTING BENCH TO BE REMOVED BY DISTRICT
114	RAISE EXISTING UTILITY BOX TO GRADE. PROVIDE NEW CONCRETE COLLAR
115	REMOVE EXISTING CATCH BASIN AND DISPOSE.
116	REMOVE EXISTING LIGHT AND BASE, COMPLETE. SEE ELECTRICAL FOR NEW AND CONTINUED CONNECTION
118	REMOVE EX. WATER VALVE, LINE AND BOX
119	REMOVE ELECTRICAL BOX - SAFE OFF POWER
120	REMOVE EXISTING DRINKING FOUNTAIN AND LINES. SALVAGE FOUNTAIN TO DISTRICT.
121	REMOVE EXISTING IRRIGATION BOX AND LINES, COMPLETE. SEE NEW LANDSCAPE AND IRRIGATION PLANS.
122	REMOVE AND DISCARD EXISTING LIGHT FIXTURE AND REPLACE WITH NEW LED LIGHT FIXTURE. SEE ELECTRICAL
190	REMOVE EXISTING CHAIN LINK FENCING AND DISPOSE
193	CUT AND REMOVE EXISTING PORTION OF HANDRAIL. PATCH AND REPAIR CUT EDGE
194	(E) C.L. FENCE TO REMAIN
195	REMOVE EXISTING CONCRETE SITE WALL AND FENCING

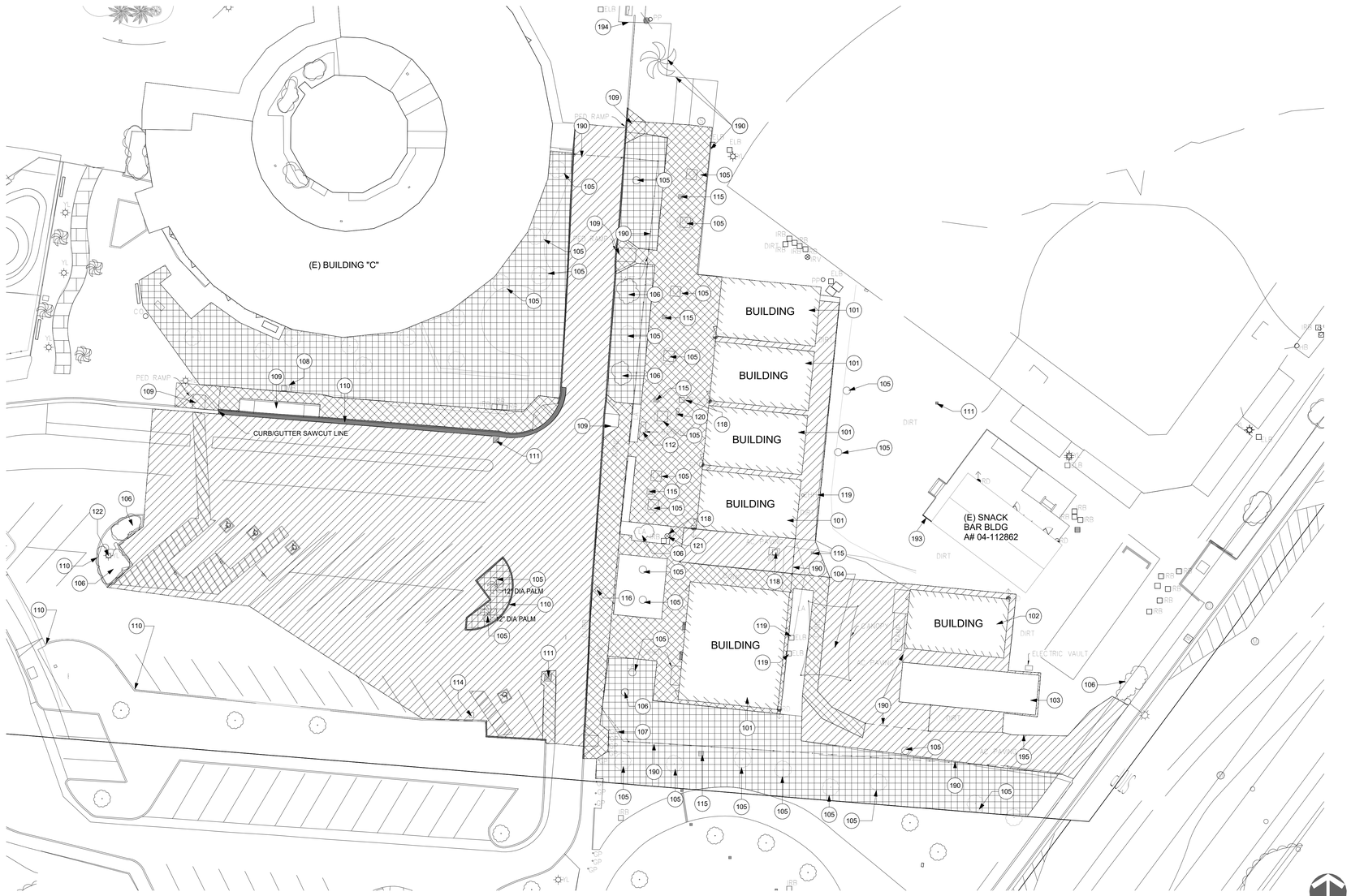

ENLARGED SITE PLAN - DEMO | 1" = 20'-0" | 1

IDENTIFICATION STAMP
DIV. OF THE STATE ARCHITECT
APP. 04-118693 INC:
REVIEWED FOR
SS ☑ FLS ☑ ACS ☑
DATE: 03.13.2020

Revison	Date
1	Date 1

Consultant

Engineer

studiowc
ARCHITECTURE + ENGINEERING
515 Encinitas Blvd, Ste. 201, Encinitas, California 92024
Telephone: (760) 634-8800 Fax: (760) 452-7541

LICENSED ARCHITECT
ROBERT D. WEBB
C-28036
OCTOBER 31, 2021
STATE OF CALIFORNIA

CHET F. HARRITT ELEM. SCHOOL
LRC & CLASSROOM ADDITION
SANTEE SCHOOL DISTRICT

ENLARGED SITE PLAN- DEMO

Drawn: Author
Checked: Checker
Date: OCTOBER 18, 2019
Job: SSD-CFH-05

A1.1

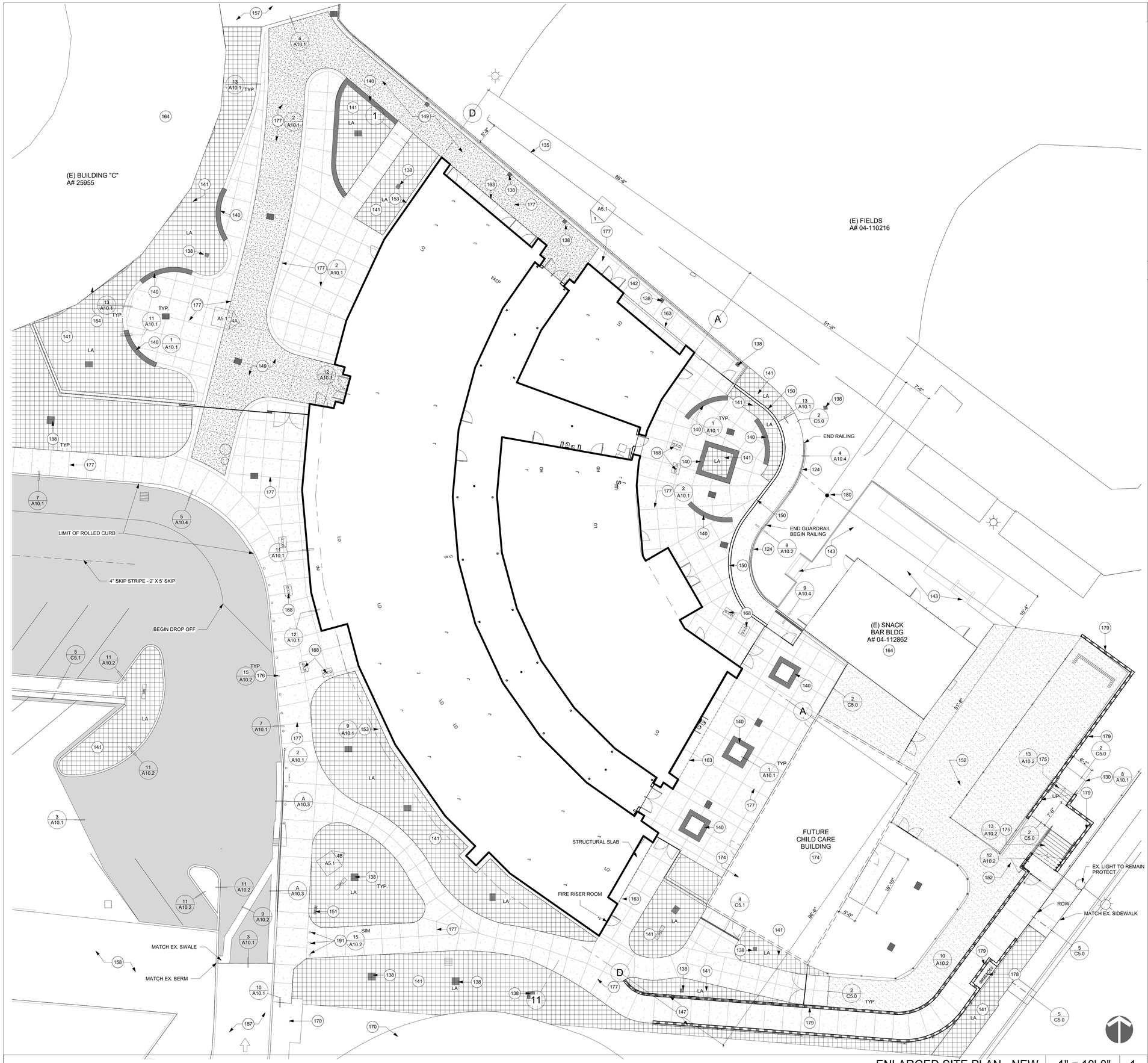

ENLARGED SITE PLAN - NEW | 1" = 10'-0" | 1

PAVING LEGEND

- (N) PROVIDE BROOM FINISH CONCRETE
- (N) PROVIDE SAND BLAST FINISH CONCRETE
- LA — (N) LANDSCAPE AREA
- (N) ASPHALT AREA
- (N) DECOMPOSED GRANITE
- (N) CMU WALL, SEE CIVIL

KEYNOTES

124	NEW CONCRETE SITE WALL- HT VARIES, WITH GUARDRAIL ON TOP WHERE CHANGE IN LEVEL EXCEED 4"
130	(N) CONCRETE CURB
135	(E) FENCING TO REMAIN. PROTECT IN PLACE
138	(N) CATCH BASIN, SEE CIVIL DRAWINGS
140	(N) SEAT WALLS
141	(N) LANDSCAPE AREA, SEE LANDSCAPE PLANS
142	(N) CONCRETE PAVING, SEE CIVIL DRAWINGS
143	(E) CONCRETE STEPS AND DECK TO REMAIN
147	NEW RETAINING WALL WITH 6' HIGH DECORATIVE METAL FENCE ON TOP
149	PROVIDE ACCENT CONCRETE, SEE CIVIL DRAWINGS
150	(N) 8'-0" HIGH DECORATIVE BLOCK WALL
151	(N) PIV, SEE CIVIL
152	(N) DECOMPOSED GRANITE
153	(N) 12" WIDE MOW CURB
157	(E) ASPHALT PAVING TO REMAIN
158	(E) PLANTER TO REMAIN
163	DASHED LINE INDICATES ROOF CANOPY
164	(E) BUILDING TO REMAIN. PROTECT IN PLACE
168	(N) SLOPED STRUCTURAL COLUMNS SET ON CON. CURB PROVIDE PAINT FINISH
170	(E) CONCRETE TO REMAIN
174	FUTURE CHILD CARE RELOCATABLE BUILDING, NOT PART OF THIS APPLICATION
175	(N) CONCRETE STAIRS, SEE DETAIL REFERENCE, SEE CIVIL FOR ELEVATIONS
176	STAINLESS STEEL BOLLARDS- 6" DIAMETER X 4' TALL
177	CONTROL JOINTS, TYP.
178	DOUBLE CHECK VALVE, SEE CIVIL
179	CMU WALL, SEE CIVIL
180	GRID LINE REFERENCE POINT
191	REMOVABLE STAINLESS STEEL BOLLARDS

IDENTIFICATION STAMP
DIV. OF THE STATE ARCHITECT
APP. 04-118693 INC:
REVIEWED FOR
SS ☑ FLS ☑ ACS ☑
DATE: 03.13.2020

Revison	Date

Consultant

Engineer

studiowc
ARCHITECTURE + ENGINEERING
515 Encinitas Blvd, Ste 201, Encinitas, California 92024
Telephone: (760) 634-8880 Fax: (760) 452-7341

LICENSED ARCHITECT
ROBERT D. WEBB
C-28036
OCTOBER 31, 2021
STATE OF CALIFORNIA

CHET F. HARRITT ELEM. SCHOOL
LRC & CLASSROOM ADDITION
SANTEE SCHOOL DISTRICT

ENLARGED SITE PLAN- NEW

Drawn: Author
Checked: Checker
Date: OCTOBER 18, 2019
Job: SSD-CFH-05

A1.2

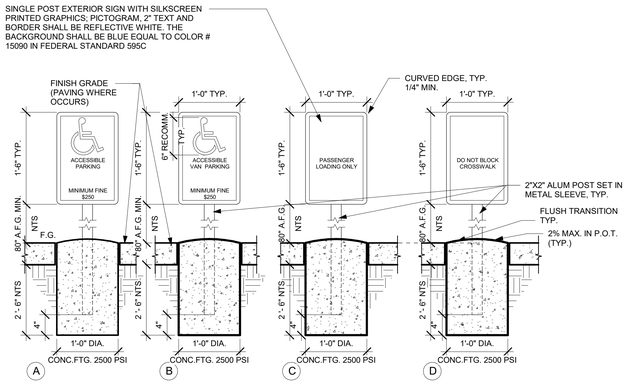

ACCESSIBLE PARKING SIGN | 1" = 1'-0" | 2

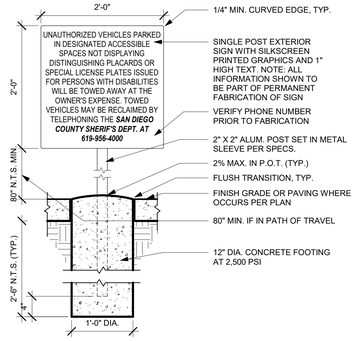

TOW-AWAY SIGN | 1" = 1'-0" | 3

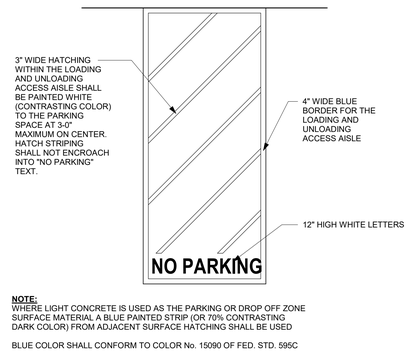

NOTE:
WHERE LIGHT CONCRETE IS USED AS THE PARKING OR DROP OFF ZONE SURFACE MATERIAL A BLUE PAINTED STRIP (OR 70% CONTRASTING DARK COLOR) FROM ADJACENT SURFACE HATCHING SHALL BE USED

BLUE COLOR SHALL CONFORM TO COLOR No. 15090 OF FED. STD. 595C

STRIPING REQUIREMENTS | 1/4" = 1'-0" | 4

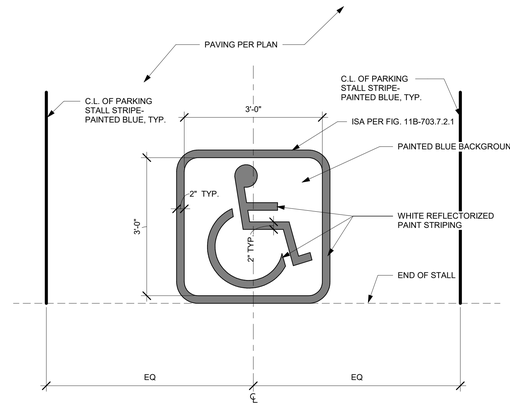

NOTE:
EACH ACCESSIBLE PARKING STALL SHALL ALSO BE IDENTIFIED BY A SIGN (A OR B) PER DETAIL

BLUE COLOR SHALL CONFORM TO COLOR No. 15090 OF FED. STD.595C

SYMBOL OF ACCESSIBILITY | 3/4" = 1'-0" | 5

STRAIGHT RUN CURB RAMP | 1/4" = 1'-0" | 9

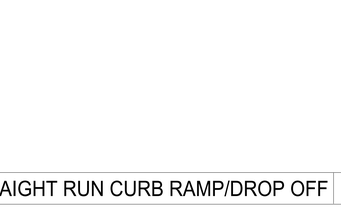

PARKING STOP | 3" = 1'-0" | 6

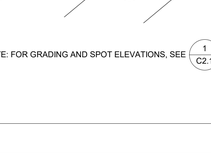

ARROW STRIPING | 1/4" = 1'-0" | 7

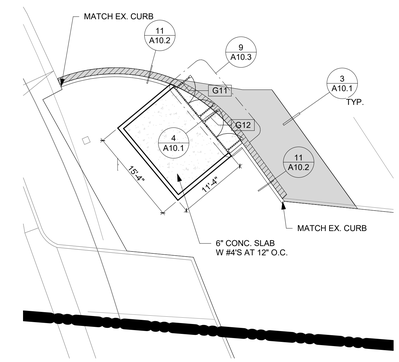

TRASH ENCLOSURE PLAN | 1" = 10'-0" | 8

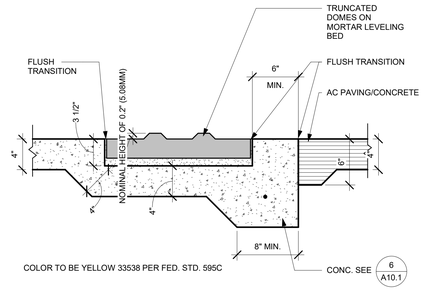

TRUNCATED DOMES AT PAVING | 1 1/2" = 1'-0" | 11

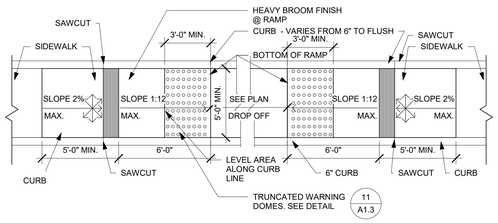

STRAIGHT RUN CURB RAMP/DROP OFF | 1/4" = 1'-0" | 10

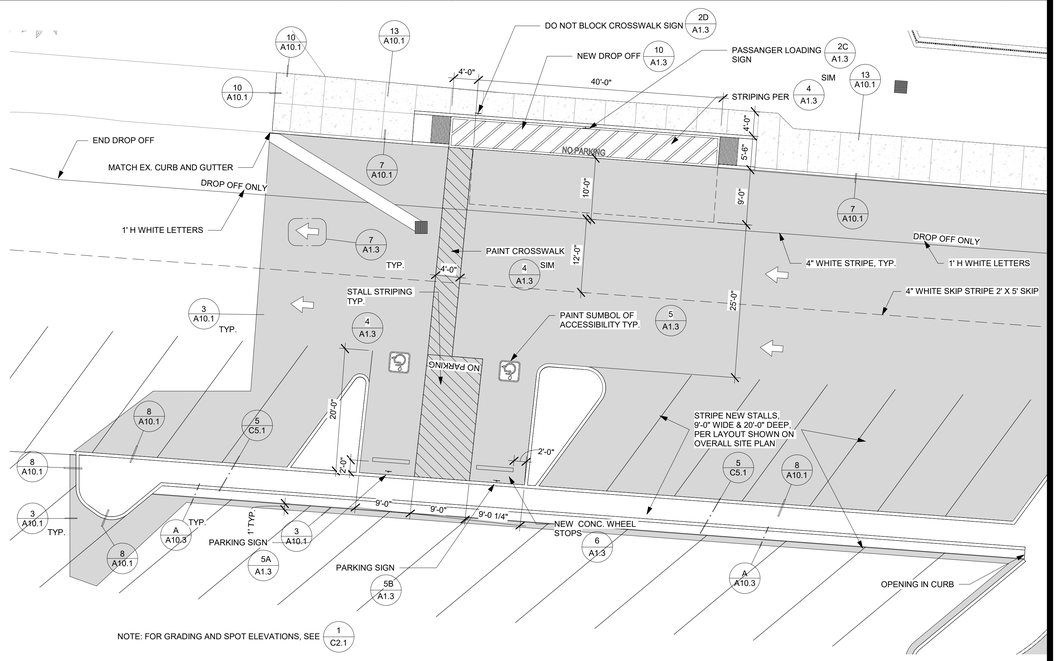

ENLARGED SITE PLAN - PARKING | 1" = 10'-0" | 1

IDENTIFICATION STAMP
DIV. OF THE STATE ARCHITECT
APP. 04-118693 INC:
REVIEWED FOR
SS ☑ FLS ☑ ACS ☑
DATE: 03.13.2020

Revision	Date

Consultant

Engineer

studiowc
ARCHITECTURE + ENGINEERING
515 Encinitas Blvd, Ste. 201, Encinitas, California 92024
Telephone: (760) 634-8880 Fax: (760) 452-7541

LICENSED ARCHITECT ROBERT D. WEBB
C-28036
OCTOBER 31, 2020
STATE OF CALIFORNIA

CHET F. HARRITT ELEM. SCHOOL
LRC & CLASSROOM ADDITION
SANTEE SCHOOL DISTRICT

ENLARGED PARKING PLAN

Drawn: Author
Checked: Checker
Date: OCTOBER 18, 2019
Job: SSD-CFH-05

A1.3

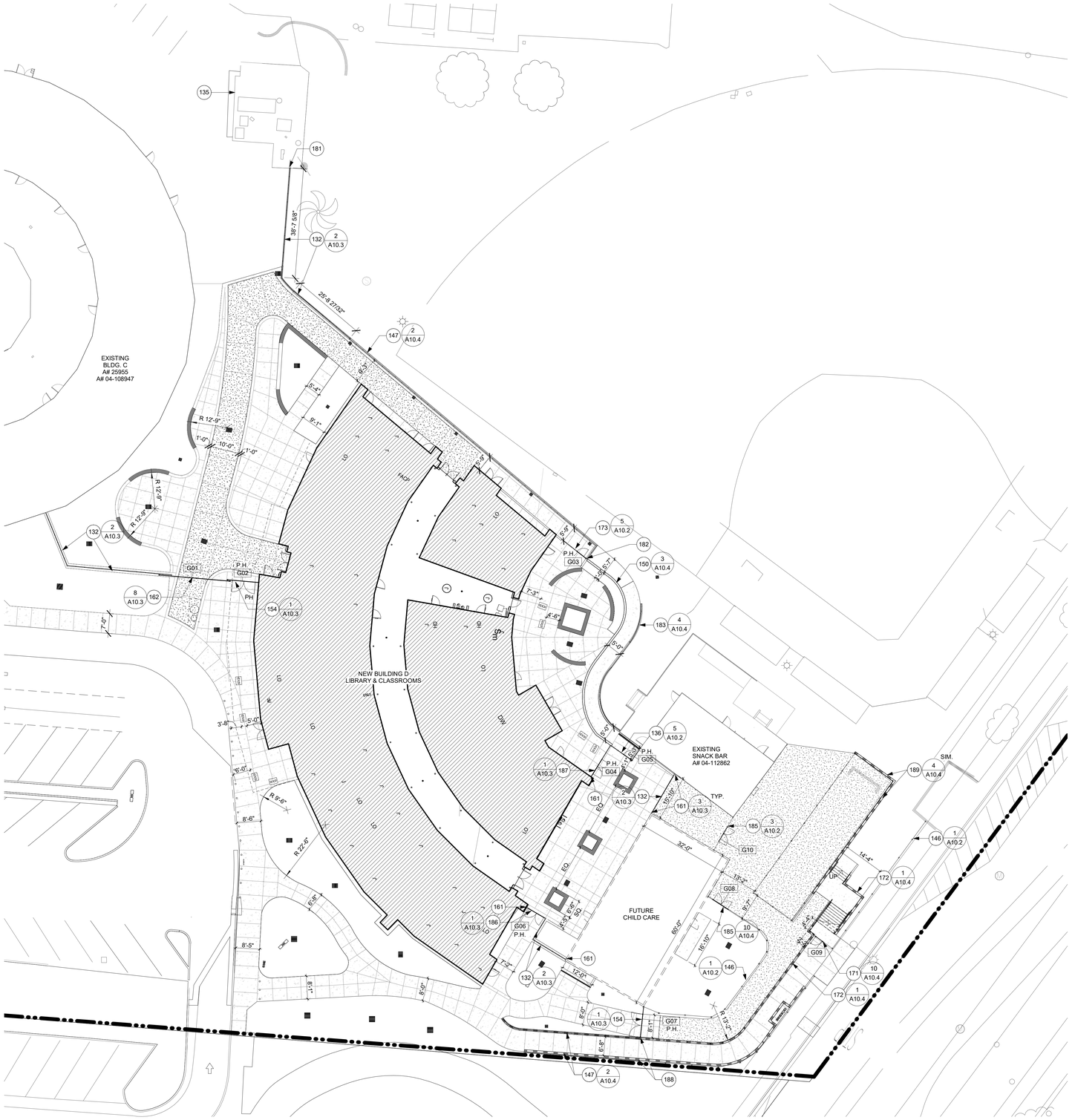

KEY NOTES

132	(N) 7'-6" HIGH DECORATIVE METAL FENCING W/ 18" MOW STRIP
135	(E) FENCING TO REMAIN. PROTECT IN PLACE
136	(N) 6'-0" HIGH DECORATIVE FENCE WITH 3'-0" WIDE SINGLE GATE WITH PANIC HARDWARE
146	(N) CHAIN LINK FENCING 8' 0" HT
147	NEW RETAINING WALL WITH 6' HIGH DECORATIVE METAL FENCE ON TOP
150	(N) 8'-0" HIGH DECORATIVE BLOCK WALL
154	(N) 7'-6" HIGH DECORATIVE FENCE WITH PAIR OF 4'-0" WIDE GATES WITH PANIC HARDWARE
161	FENCE TERMINATION AT WALL, SEE TYP. DETAIL REF'D ON PLAN
162	(N) DEC. METAL ROLLING GATE 25' WIDE AND 7'-6" HIGH, PER DTL REF'D ON PLAN
171	(N) 8'-0" HIGH CHAIN LINK FENCE AND 3'-0" WIDE GATE
172	NEW RETAINING WALL WITH 8'-0" HIGH CHAIN LINK FENCE ON TOP
173	(N) 6'-0" HIGH DECORATIVE FENCE WITH 4'-0" WIDE SINGLE GATE WITH PANIC HARDWARE
181	CONNECT NEW DECORATIVE METAL FENCE TO EXISTING CHAIN LINK FENCE
182	END OF BLOCK WALL, BEGIN DECORATIVE METAL FENCE
183	NEW CONCRETE WALL W/ HANDRAIL, HEIGHT VARIES, 6" TO 24" MAX.
185	(N) 8'-0" HIGH CHAIN LINK FENCE AND PAIR OF 3'-0" WIDE GATES
186	(N) 7'-6" HIGH DECORATIVE FENCE WITH PAIR OF 3'-0" WIDE GATES WITH PANIC HARDWARE
187	(N) 6'-0" HIGH DECORATIVE FENCE WITH PAIR OF 3'-0" WIDE GATES WITH PANIC HARDWARE
188	END CHAIN LINK FENCE ON WALL, BEGIN DECORATIVE METAL FENCE ON WALL
189	RETAINING WALL, NO FENCE ON TOP

GATE GENERAL NOTES

SEE GATE HARDWARE SCHEDULE ON A8.1

IDENTIFICATION STAMP
DIV. OF THE STATE ARCHITECT
APP. 04-118693 INC:
REVIEWED FOR
SS ☑ FLS ☑ ACS ☑
DATE: 03.13.2020

Revison	Date

Consultant

Engineer

studiowc
ARCHITECTURE + ENGINEERING
515 Encinitas Blvd, Ste. 201, Encinitas, California 92024
Telephone: (760) 634-8880 Fax: (760) 452-7541

LICENSED ARCHITECT
ROBERT D. WEBB
R.D. Webb
C-28036
OCTOBER 31, 2021
STATE OF CALIFORNIA

CHET F. HARRITT ELEM. SCHOOL
LRC & CLASSROOM ADDITION
SANTEE SCHOOL DISTRICT

ENLARGED FENCING & DIMENSION SITE PLAN

Drawn: Author
Checked: Checker
Date: OCTOBER 18, 2019
Job: SSD-CFH-05

A1.4

FENCING & DIMENSIONING SITE PLAN | 1/16" = 1'-0" | 1

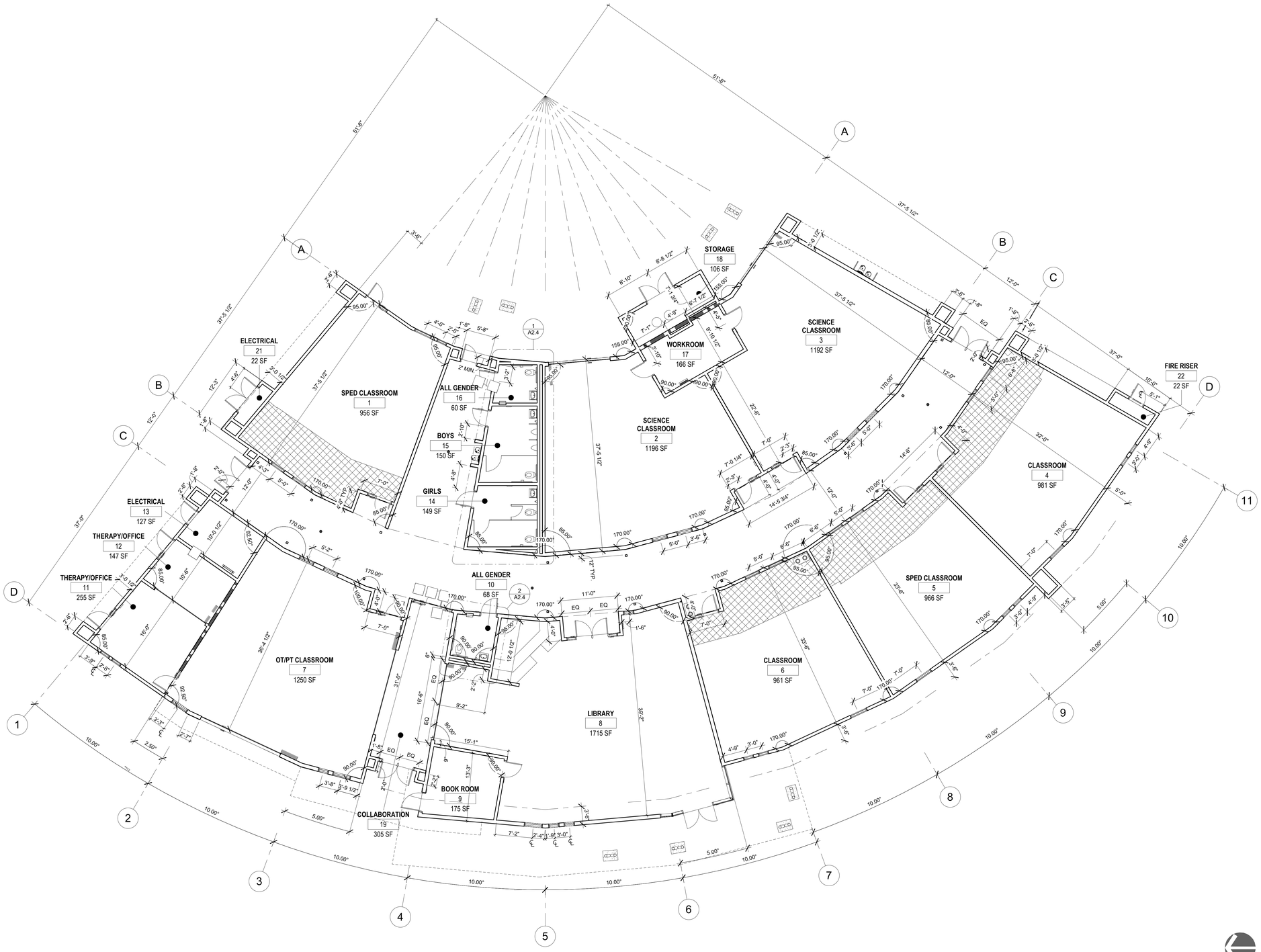

DIMENSION FLOOR PLAN | 1/8" = 1'-0" | 1

WALL LEGEND

NEW WALL

NEW RATED WALL

NOTE:
INTERIOR WALLS ARE TO BOTTOM OF DECK, INSULATED WITH 3" BATT INSULATION NO-FACE AND GYP. EA. SIDE, UNLESS NOTED OTHERWISE. RATED WALLS SHALL BE LABELED ABOVE THE CEILING PER CBC 703.6

SEE SHEET A30.1 FOR CEILING DTLS

GENERAL NOTES

1. DIMENSIONS ARE FACE OF STUD, U.N.O. AT STRUCTURED WALL WHERE PLYWOOD SEATHING OCCURS,DIMENSION IS FACE OF SHEATING

IDENTIFICATION STAMP
DIV. OF THE STATE ARCHITECT
APP. 04-118693 INC:
REVIEWED FOR
SS ☑ FLS ☑ ACS ☑
DATE: 03.13.2020

Revison	Date

Consultant

Engineer

studiowc
ARCHITECTURE + ENGINEERING
515 Encinitas Blvd, Ste. 201, Encinitas, California 92024
Telephone: (760) 634-8880 Fax: (760) 452-7341

LICENSED ARCHITECT
ROBERT D. WEBB
C-28036
OCTOBER 31, 2020
STATE OF CALIFORNIA

CHET F. HARRITT ELEM. SCHOOL
LRC & CLASSROOM ADDITION
SANTEE SCHOOL DISTRICT

DIMENSION FLOOR PLAN

Drawn: Author
Checked: Checker
Date: OCTOBER 18, 2019
Job: SSD-CFH-05

A2.1

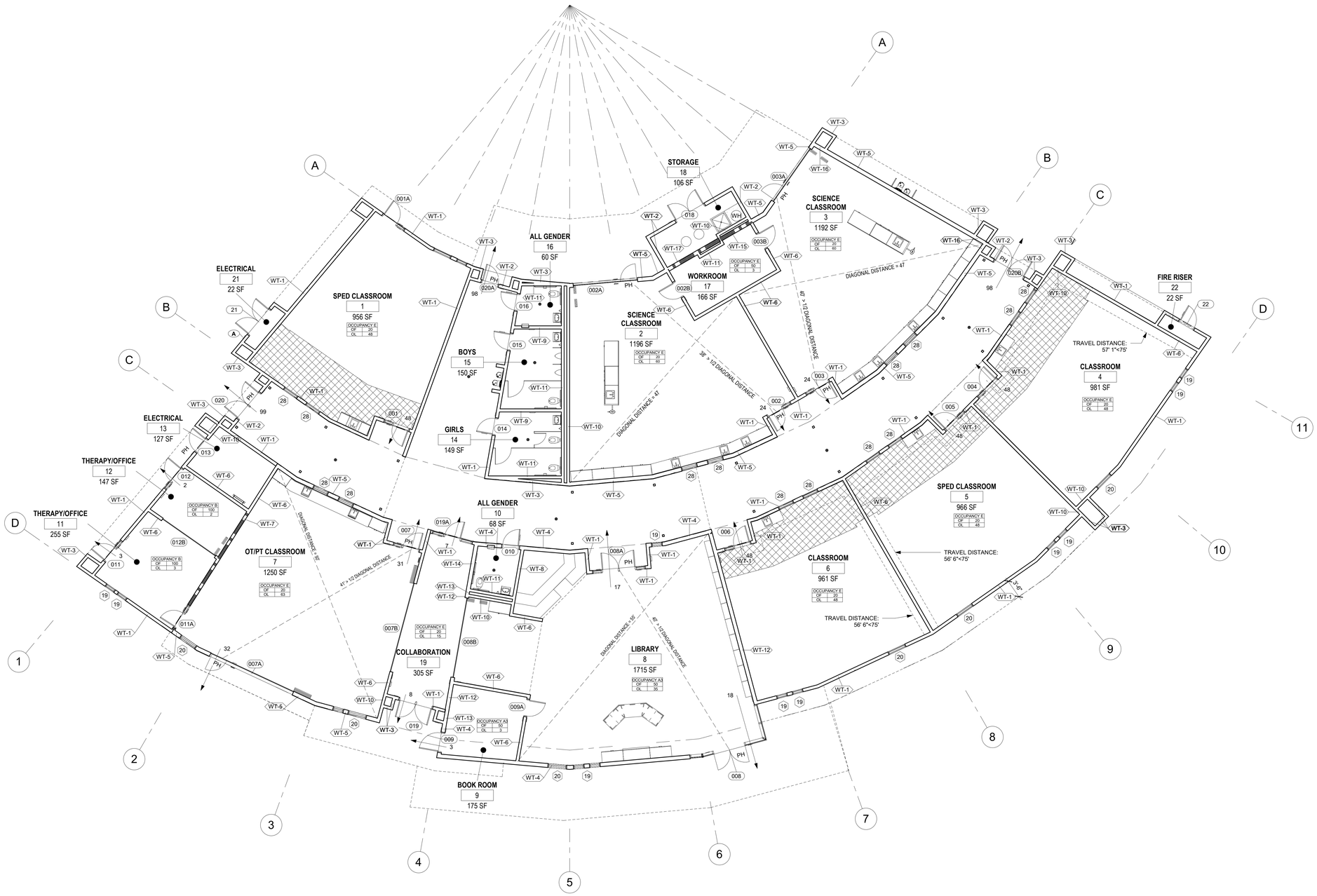

EXITING & OPENING FLOOR PLAN | 1/8" = 1'-0" | 1

WALL LEGEND

NEW WALL

NEW RATED WALL

NOTE:
INTERIOR WALLS ARE TO BOTTOM OF DECK, INSULATED WITH 3" BATT INSULATION NO-FACE AND GYP. EA. SIDE, UNLESS NOTED OTHERWISE. RATED WALLS SHALL BE LABELED ABOVE THE CEILING PER CBC 703.6

SEE SHEET A30.1 FOR CEILING DTLS

IDENTIFICATION STAMP
DIV. OF THE STATE ARCHITECT
APP. 04-118693 INC:
REVIEWED FOR
SS ☑ FLS ☑ ACS ☑
DATE: 03.13.2020

Revison	Date

Consultant

Engineer

studiowc
ARCHITECTURE + ENGINEERING
515 Encinitas Blvd, Ste. 201, Encinitas, California 92024
Telephone: (760) 632-8800 Fax: (760) 452-7341

LICENSED ARCHITECT
ROBERT D. WEBB
R.D.W.
C-28036
OCTOBER 31, 2020
STATE OF CALIFORNIA

CHET F. HARRITT ELEM. SCHOOL
LRC & CLASSROOM ADDITION
SANTEE SCHOOL DISTRICT

EXITING FLOOR PLAN

Drawn: Author
Checked: Checker
Date: OCTOBER 18, 2019
Job: SSD-CFH-05

A2.2

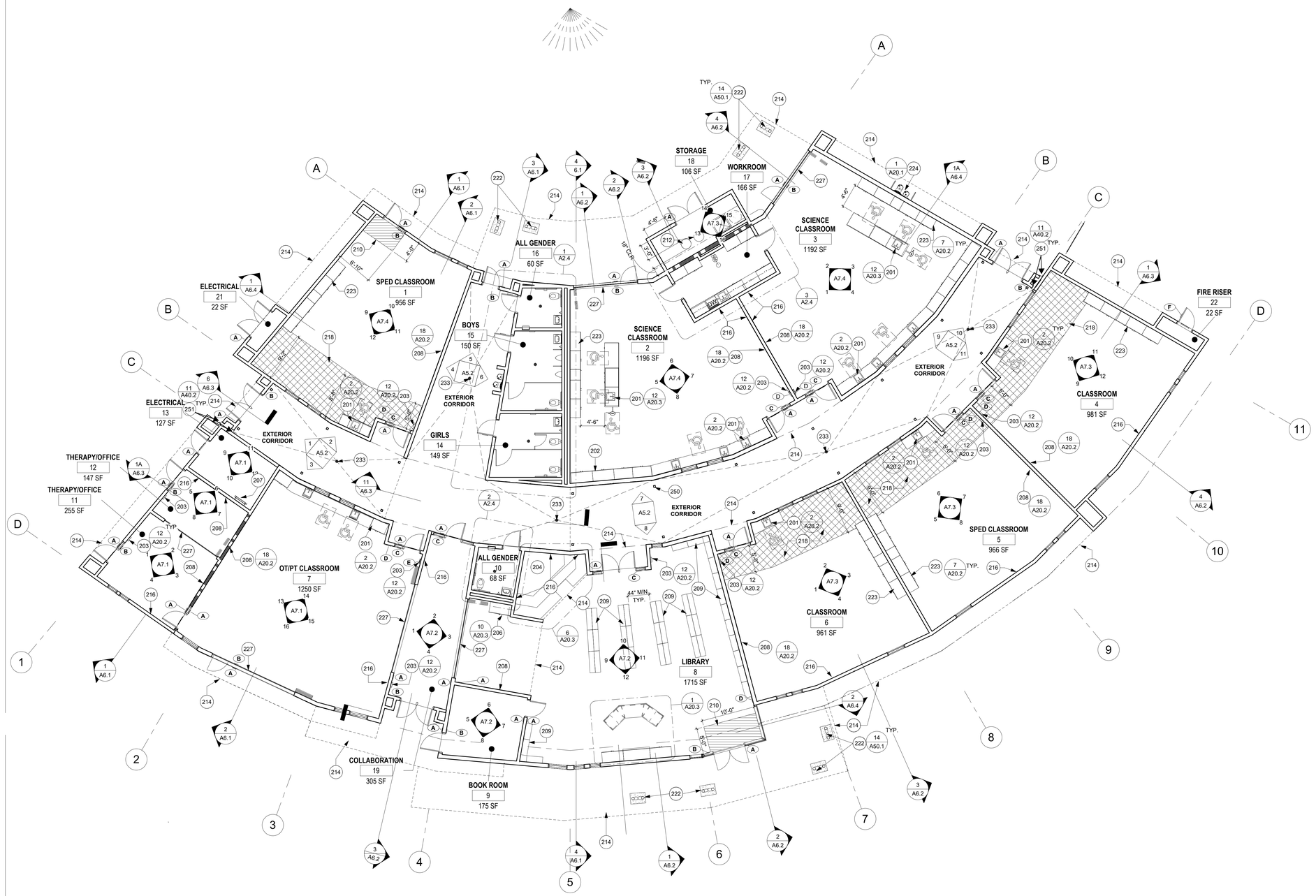

OVERALL FLOOR PLAN | 1/8" = 1'-0" | 1

WALL LEGEND

NEW WALL

NEW RATED WALL

NOTE:
INTERIOR WALLS ARE TO BOTTOM OF DECK, INSULATED WITH 3" BATT INSULATION NO-FACE AND GYP. EA. SIDE, UNLESS NOTED OTHERWISE. RATED WALLS SHALL BE LABELED ABOVE THE CEILING PER CBC 703.6

SEE SHEET A30.1 FOR CEILING DTLS

SIGNANGE LEGEND

- A — ROOM ID SIGN — 6 / A20.1
- B — ROOM EXIT SIGN — 16 / A20.1
- C — EXIT ROUTE SIGN — 16 / A20.1
- D — ASSISTIVE LISTENING SIGN — 4 / A20.1
- E — OCCUPANCY SIGN — 8 / A20.1
- F — FIRE RISER SIGN — 9 / A20.1

KEY NOTES

201	ACCESSIBLE SINK AND CASE WORK - SEE INT. ELEVATIONS
202	CASEWORK - SEE INT. ELEVATIONS
203	RECESSED FIRE EXTINGUISHER CABINET PER SPECIFICATIONS AND DETAIL REF'D ON PLANS
204	RAISED READING AREA- SEE ENLARGED PLAN
206	DISPLAY CABINET - SEE DETAIL REF'D ON PLAN
207	ROOF ACCESS HATCH AND LADDER
208	MARKER BOARD
209	BOOKSTACKS, OFCI. PROVIDE BACKING
210	PROVIDE WALK OFF MAT, FLUSH W/ ADJACENT CPT
212	ELECTRIC KILN, OFCI. PROVIDE 18" MIN CLEARANCE AROUND ALL WALLS
214	DASHED LINE INDICATES OVERHANG ABOVE
216	TACKABLE WALL PANELS - SEE INT. ELEVATIONS
218	RESILIENT FLOORING AND RUBBER BASE, TYP.
222	PAINTED V-COLUMNS, SEE STRUCTURAL.
223	FUTURE TEACHING WALL. OFCI
224	ACCESSIBLE DRINKING FOUNTAIN WITH BOTTLE FILLER, SEE PLUMBING
227	OPERABLE WALL- INTERIOR
233	FLOOR DRAIN. SLOPE FLOOR TOWARDS DRAIN 1% MAX
250	FUTURE STEEL COLUMNS AND CANOPY STRUCTURE ABOVE
251	EXPANSION JOINT COVER, PER DTL ON PLAN

IDENTIFICATION STAMP
DIV. OF THE STATE ARCHITECT
APP. 04-118693 INC:
REVIEWED FOR
SS ☑ FLS ☑ ACS ☑
DATE: 03.13.2020

Revison	Date

Consultant

Engineer

studiowc
ARCHITECTURE + ENGINEERING
515 Encinitas Blvd, Ste 201 Encinitas, California 92024
Telephone: (760)632-8800 Fax: (760)452-7541

LICENSED ARCHITECT
ROBERT D. WEBB
R.D.Webb
C-28036
STATE OF CALIFORNIA
OCTOBER 31, 2021

CHET F. HARRITT ELEM. SCHOOL
LRC & CLASSROOM ADDITION
SANTEE SCHOOL DISTRICT

OVERALL FLOOR PLAN

Drawn: Author
Checked: Checker
Date: OCTOBER 18, 2019
Job: SSD-CFH-05

A2.3

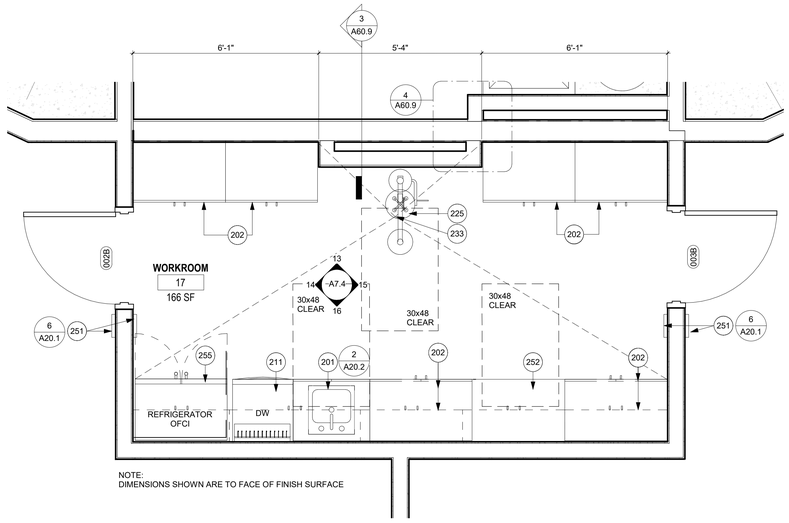

NOTE:
DIMENSIONS SHOWN ARE TO FACE OF FINISH SURFACE

ENLARGED FLOOR PLAN- WORKROOM | 1/2" = 1'-0" | 3

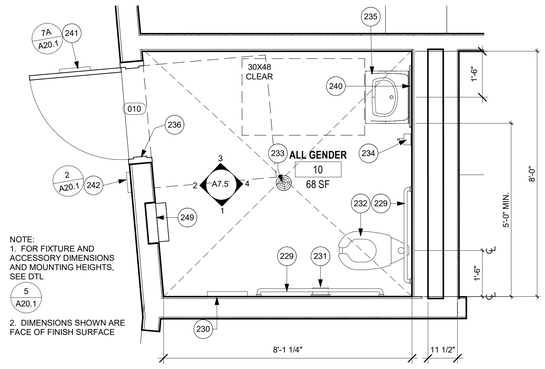

NOTE:
1. FOR FIXTURE AND ACCESSORY DIMENSIONS AND MOUNTING HEIGHTS, SEE DTL 5 A20.1
2. DIMENSIONS SHOWN ARE FACE OF FINISH SURFACE

ENLARGED TOILET PLAN - STAFF | 1/2" = 1'-0" | 2

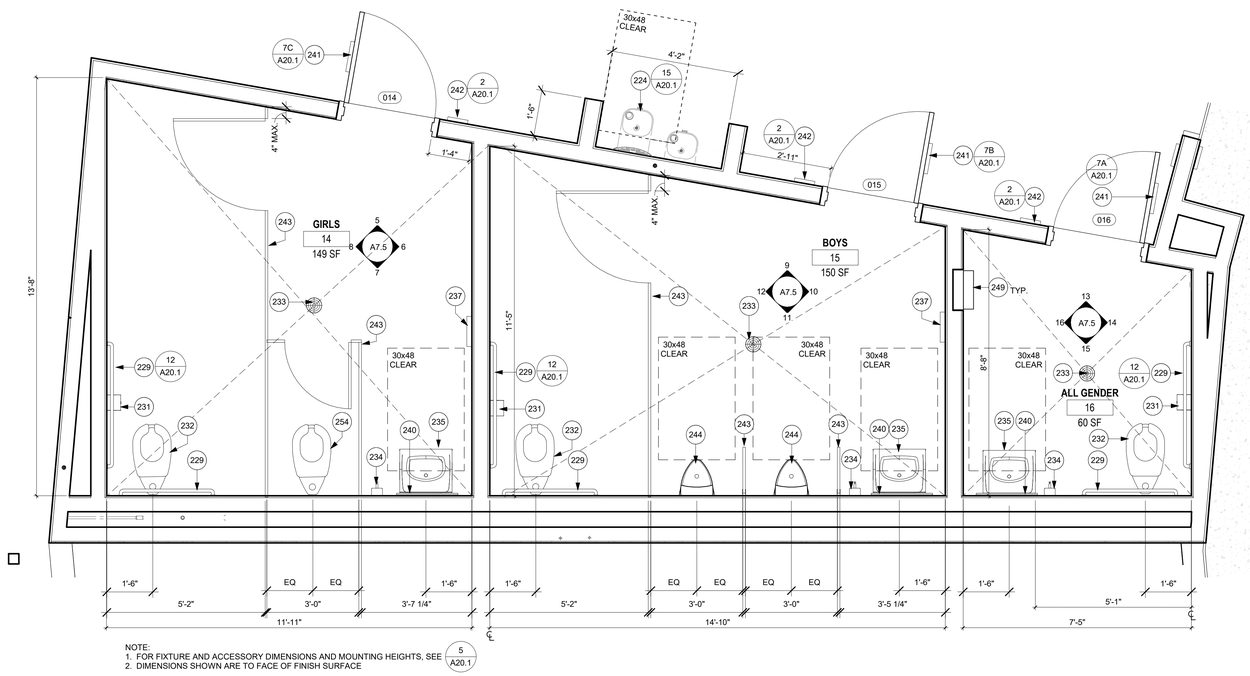

NOTE:
1. FOR FIXTURE AND ACCESSORY DIMENSIONS AND MOUNTING HEIGHTS, SEE 5 A20.1
2. DIMENSIONS SHOWN ARE TO FACE OF FINISH SURFACE

ENLARGED TOILET PLAN - STUDENT | 1/2" = 1'-0" | 1

KEYNOTES

201	ACCESSIBLE SINK AND CASE WORK - SEE INT. ELEVATIONS
202	CASEWORK - SEE INT. ELEVATIONS
211	DISHWASHER UNDER COUNTER, OFCI, SHALL COMPLY WITH IIB-804.6.3
224	ACCESSIBLE DRINKING FOUNTAIN WITH BOTTLE FILLER, SEE PLUMBING
225	EMERGENCY SHOWER, SEE PLUMBING
229	GRAB BAR
230	SEAT COVER DISPENSER
231	RECESSED TOILET TISSUE DISPENSER
232	ACCESSIBLE TOILET
233	FLOOR DRAIN. SLOPE FLOOR TOWARDS DRAIN 1% MAX
234	SOAP DISPENSER, OFCI
235	ACCESSIBLE SINK
236	HOLLOW METAL DOOR FRAME, SEE DOOR/WINDOW SCHEDULES
237	ELECTRIC HAND DRYER, 4" MAX PROJECTION
240	MIRROR
241	TOILET ROOM DOOR SIGN, SEE DETAIL ON DRAWINGS
242	TOILET ROOM WALL SIGN, SEE DETAIL ON DRAWINGS
243	SOLID PLASTIC TOILET COMPARTMENT PARTITIONS
244	ACCESSIBLE URINAL
249	PAPER TOWEL AND TRASH DISPENSER COMBO UNIT, NOT TO EXCEED 4" PROJECTION FROM WALL.
251	ROOM IDENTIFICATION SIGN, SEE DETAIL ON DRAWINGS
252	ACCESSIBLE KNEE SPACE AND COUNTERTOP, SEE INTERIOR ELEVATION
254	TOILET
255	REFRIGERATOR, OFCI, SHALL COMPLY WITH IIB-804.6.6

IDENTIFICATION STAMP
DIV. OF THE STATE ARCHITECT
APP. 04-118693 INC:
REVIEWED FOR
SS ☑ FLS ☑ ACS ☑
DATE: 03.13.2020

Revison	Date

Consultant

Engineer

studiowc
ARCHITECTURE + ENGINEERING
515 Encinitas Blvd, Ste. 201, Encinitas, California 92024
Telephone: (760) 632-8800 Fax: (760) 452-7341

LICENSED ARCHITECT
ROBERT D. WEBB
C-28036
OCTOBER 31, 2021
STATE OF CALIFORNIA

CHET F. HARRITT ELEM. SCHOOL
LRC & CLASSROOM ADDITION
SANTEE SCHOOL DISTRICT

ENLARGED FLOOR PLANS

Drawn: Author
Checked: Checker
Date: OCTOBER 18, 2019
Job: SSD-CFH-05

A2.4

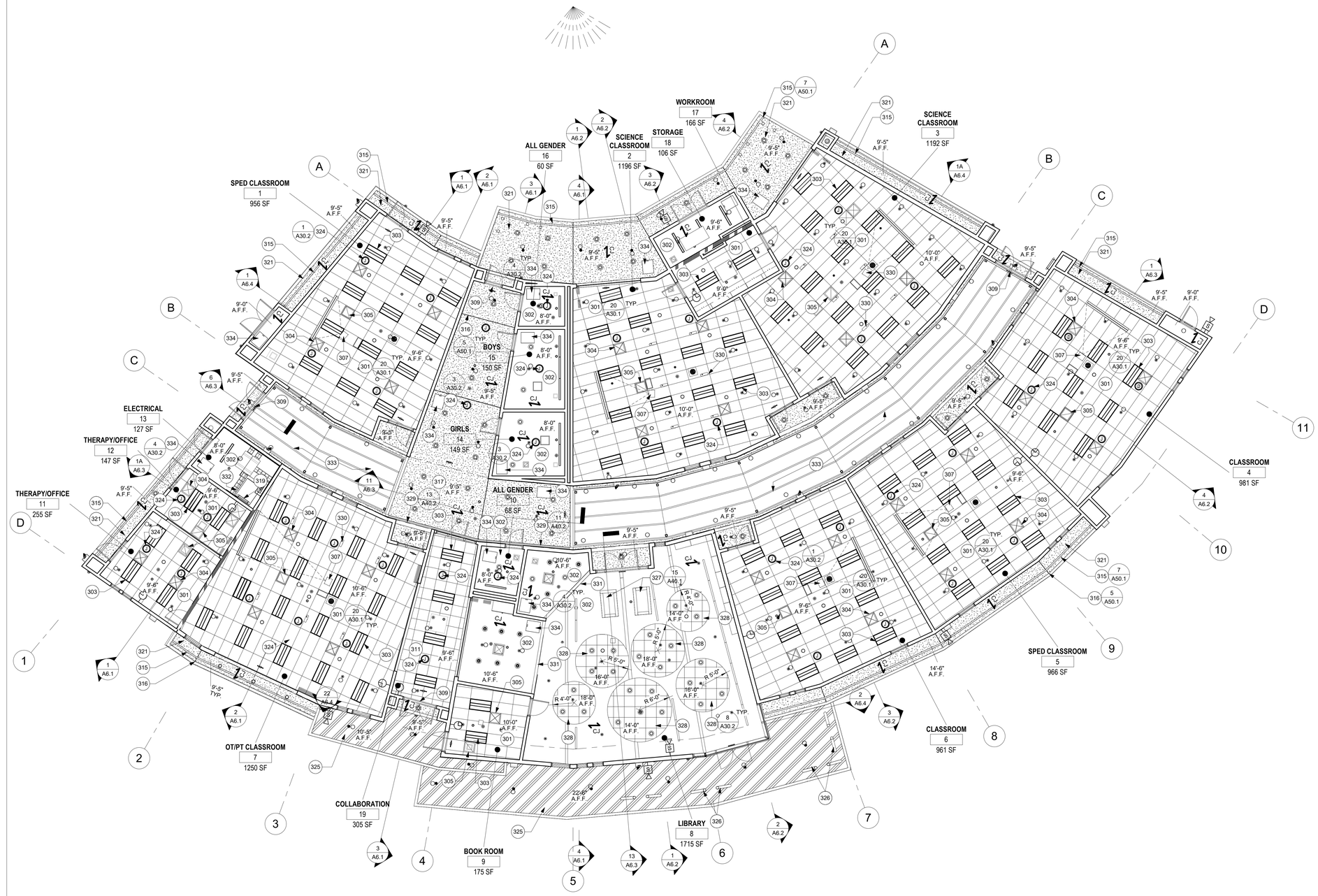

REFLECTED CEILING PLAN | 1/8" = 1'-0" | 1

CEILING LEGEND

- 2x2 ACOUSTICAL CEILING
- 2x4 ACOUSTICAL CEILING
- GYPSUM BOARD CEILING
- CEMENT PLASTER CEILING WITH CONTROL JOINTS
- METAL CLADDING SOFFIT CEILING
- AIR REGISTER. SEE MECHANICAL DRAWINGS
- LIGHT FIXTURES. SEE ELECTRICAL DRAWINGS
- 10'-0" CEILING HEIGHT ABOVE FINISH FLOOR IN THE ROOM
- CJ DIRECTION OF CEILING JOIST SPAN

NOTE:
ALL WALLS EXTEND TO UNDERSIDE OF ROOF DECK UNLESS NOTED OTHERWISE ON THIS SHEET

WALL SYMBOLS

- NEW WALL
- NEW RATED WALL

NOTE:
INTERIOR WALLS ARE TO BOTTOM OF DECK, INSULATED WITH 3" BATT INSULATION NO-FACE AND GYP. EA. SIDE, UNLESS NOTED OTHERWISE. RATED WALLS SHALL BE LABELED ABOVE THE CEILING PER CBC 703.6

SEE SHEET A30.1 FOR CEILING DTLS

KEY NOTES

301	PROVIDE 24" X 48" HEAVY DUTY CLASSIFICATION ACOUSTIC CEILING TILE SUSPENSION SYSTEM AND CEILING TILES IN THIS AREA, PER NOTES RED AND TYPICAL DTLS.
302	PROVIDE 5/8" GYPSUM WALLBOARD CEILING ON WOOD FRAMING IN THIS AREA
303	PROVIDE LIGHT FIXTURE TYPICAL. SEE ELECTRICAL DRAWINGS
304	PROVIDE SUPPLY GRILLE TYPICAL. SEE MECHANICAL DRAWINGS
305	PROVIDE RETURN REGISTER TYPICAL. SEE MECHANICAL DRAWINGS
307	PROVIDE CEILING-MOUNTED PROJECTOR. SEE ELECTRICAL DRAWINGS
309	PROVIDE LIGHTED EXIT SIGNAGE. SEE ELECTRICAL DRAWINGS
311	PROVIDE 24" X 24" ACOUSTICAL CEILING TILE SUSPENSION SYSTEM AND CEILING TILES IN THIS AREA
315	PLASTER VENT, SEE TYP. DETAIL REF. ON PLAN
316	PLASTER CONTROL JOINT, SEE TYP. DETAIL REF. ON PLAN
317	7/8" PLASTER SOFFIT CEILING IN THIS AREA
319	PROVIDE ROOF ACCESS LADDER AND HATCH
321	PROVIDE EXTERIOR PLASTER SOFFIT AND FRAMING
324	PROVIDE NEW OPTIVIEW DIFFUSER AND ADJUSTABLE TUBING FOR SOLATUBE 290-DS SYSTEM, TYP. CUT EXISTING ACOUSTIC CEILING TILE AS REQUIRED. SEE DETAIL REFERENCED ON PLAN
325	METAL CLADDING SOFFIT PANELING THIS AREA
326	PAINTED COLUMNS, SEE STRUCTURAL
327	24" X 48" SKYLIGHT, SEE DETAIL REF'D ON PLAN
328	FLOATING ACOUSTIC CEILING TILE CLOUD SYSTEM WITH 4" PERIMETER TRIM, PER SPECS. PROVIDE HORIZONTAL SEISMIC CABLE BRACING AND VERTICAL STRUTS PER DTL REF'D ON PLAN, WIRED PERIMETER CHANNEL PER SPECIFICATIONS
329	EXTERIOR EXPANSION JOINT COVER
330	CEILING MOUNTED POWER CHORD REEL, SEE ELECTRICAL
331	HEADER
332	FRAMED OPENING FOR ROOF ACCESS
333	FUTURE TRANSLUCENT CANOPY STRUCTURE ABOVE
334	24" X 30" CEILING ACCESS PANEL, PER DTL REF'D ON PLAN

IDENTIFICATION STAMP
DIV. OF THE STATE ARCHITECT
APP. 04-118693 INC:
REVIEWED FOR
SS ☑ FLS ☑ ACS ☑
DATE: 03.13.2020

Revison	Date

Consultant

Engineer

studiowc
ARCHITECTURE + ENGINEERING
515 Encinitas Blvd, Ste 201, Encinitas, California 92024
Telephone: (760) 452-8880 Fax: (760) 452-7541

LICENSED ARCHITECT
ROBERT D. WEBB
R.D.W.
C-28036
OCTOBER 31, 2020
STATE OF CALIFORNIA

CHET F. HARRITT ELEM. SCHOOL
LRC & CLASSROOM ADDITION
SANTEE SCHOOL DISTRICT

REFLECTED CEILING PLAN

Drawn: Author
Checked: Checker
Date: OCTOBER 18, 2019
Job: SSD-CFH-05

A3.1

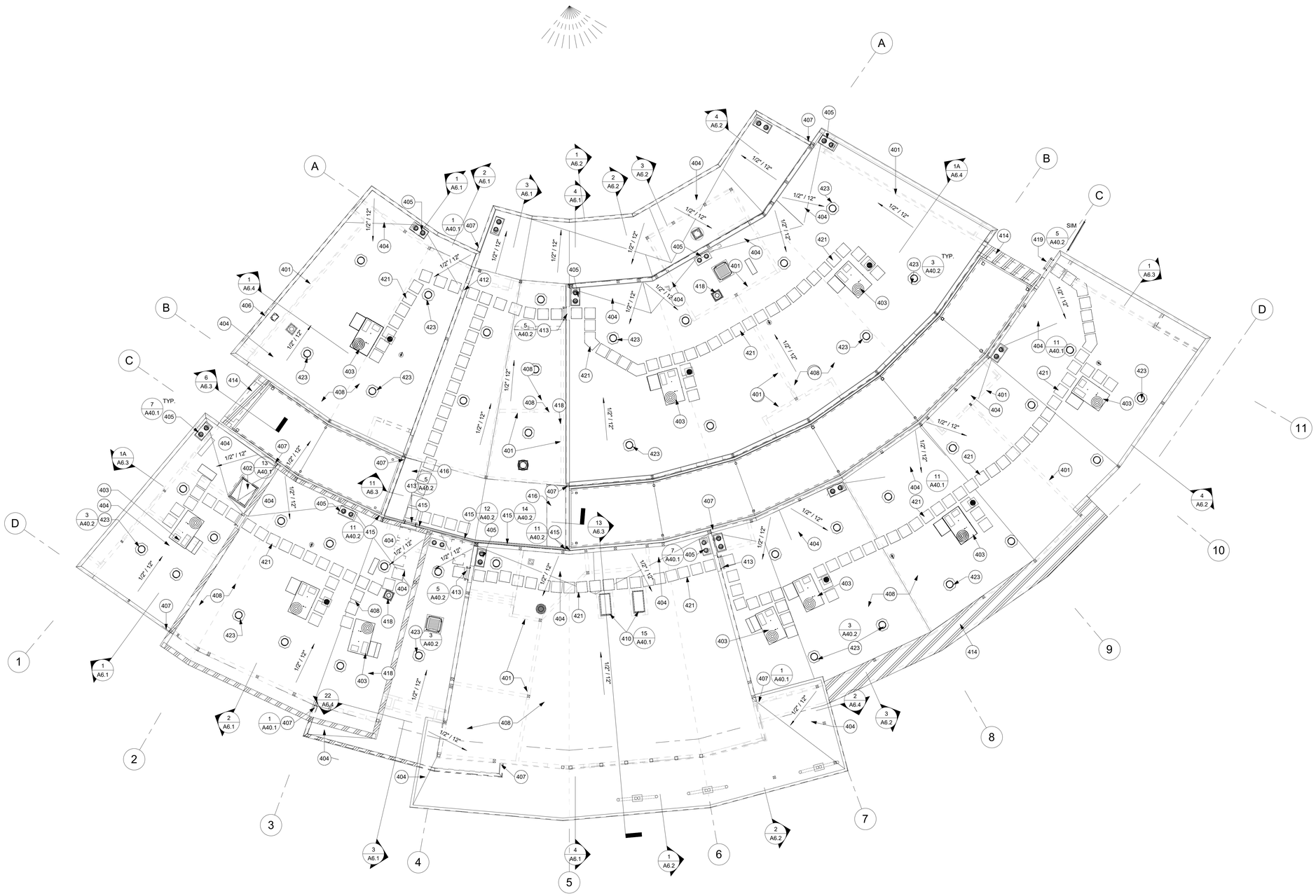

KEY NOTES

401	DASHED LINES INDICATE WALL BELOW, TYP.
402	ROOF HATCH, SEE TYP. DETAIL REF. ON PLAN, AND GUARDRAIL PER SPECS
403	NEW MECHANICAL UNIT. SEE MECHANICAL DRAWINGS, SEE TYP. ARCH. DETAIL REF. ON PLAN
404	ROOF CRICKET, TYP.
405	ROOF DRAIN AND OVERFLOW DRAIN, SEE PLUMBING DRAWINGS, SEE TYP. ARCH. DETAIL REF. ON PLAN
406	INDICATED PARAPET WALL, TYP.
407	PARAPET TERMINATION AT WALL, SEE TYP. DETAIL REF. ON PLAN
408	TPO ROOFING
410	PROVIDE AND INSTALL 24" X 48" SKYLIGHT, SEE DETAIL REF'D ON PLAN
412	PROVIDE 36" WIDE OPENING AT PARAPET WALL
413	PROVIDE NEW 36" OPENING AT PARAPET WALL. PROVIDE EXTERIOR WALL MOUNTED LADDER PER DTL REF'D ON PLAN
414	PROVIDE SHEET METAL WALL CAP
415	EXTERIOR EXPANSION JOINT COVER
416	PARAPET BRACING PER STRUCTURAL
418	EXHAUST FAN, SEE MECHANICAL DRAWINGS
419	PROVIDE EXTERIOR WALL MOUNTED LADDER PER DETAIL REFERENCED ON PLAN
421	WALKWAY PADS, SEE SPECS FOR ADDITIONAL INFORMATION. PLACE PADS 1" MIN. - 6" MAX. APART FOR PROPER DRAINAGE U.N.O. BY MANUFACTURER
423	PROVIDE SOLATUBE 290-DS DOME AND CURB MOUNTED FLASHING, TYP. PROVIDE TUBE BENDS AND EXTENSIONS AS NECESSARY TO AVOID LOCATION WITHIN MECHANICAL UNIT SERVICE AREA ABOVE. SEE DETAIL REFERENCE ON PLAN

ROOF PLAN GENERAL NOTES

1. ALL ROOFING SHALL MEET CLASS "A" RATING
2. ALL ROOF PENETRATIONS ARE NOT SHOWN ON THIS PLAN, REFER TO PLUMBING, MECHANICAL AND ELECTRICAL DRAWINGS
3. SEE WALL SECTION FOR ROOF FLASHING DETAILS
4. NOT ALL LOCATIONS OF TYPICAL DETAILS ARE SHOWN - REFER TO ROOF DETAIL SHEET FOR TYPICAL DETAILS
5. PROVIDE 4" CANT STRIPS AT ALL VERTICAL SURFACES, TYP.
6. PHOTOVOLTAIC PANELS WILL NEED TO BE SUBMITTED UNDER A SEPARATE DSA APPLICATION NUMBER AS AN ALTERATION TO THE BUILDING.

IDENTIFICATION STAMP
DIV. OF THE STATE ARCHITECT
APP. 04-118693 INC:
REVIEWED FOR
SS ☑ FLS ☑ ACS ☑
DATE: 03.13.2020

Revison	Date

Consultant

Engineer

studiowc
ARCHITECTURE + ENGINEERING
515 Encinitas Blvd, Ste. 201, Encinitas, California 92024
Telephone: (760) 634-8880 Fax: (760) 452-7541

LICENSED ARCHITECT
ROBERT D. WEBB
C-28036
OCTOBER 31, 2021
STATE OF CALIFORNIA

CHET F. HARRITT ELEM. SCHOOL
LRC & CLASSROOM ADDITION
SANTEE SCHOOL DISTRICT

ROOF PLAN

Drawn: Author
Checked: Checker
Date: OCTOBER 18, 2019
Job: SSD-CFH-05

A4.1

ROOF PLAN | 1/8" = 1'-0" | 1

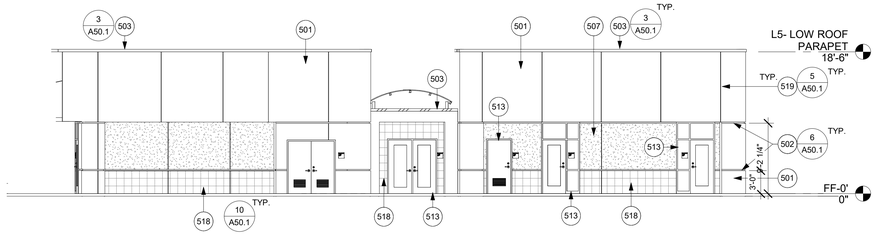

NORTH ELEVATION | 1/8" = 1'-0" | 1

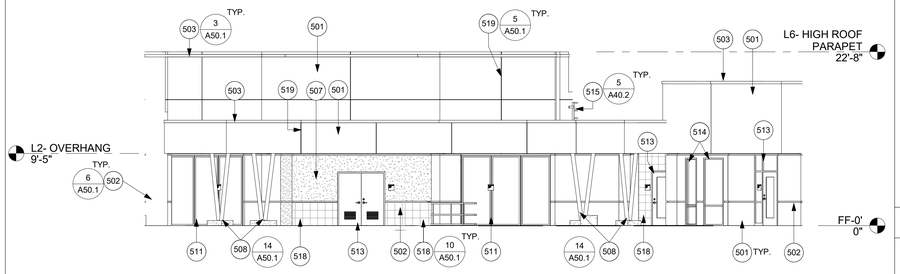

EAST ELEVATION | 1/8" = 1'-0" | 2

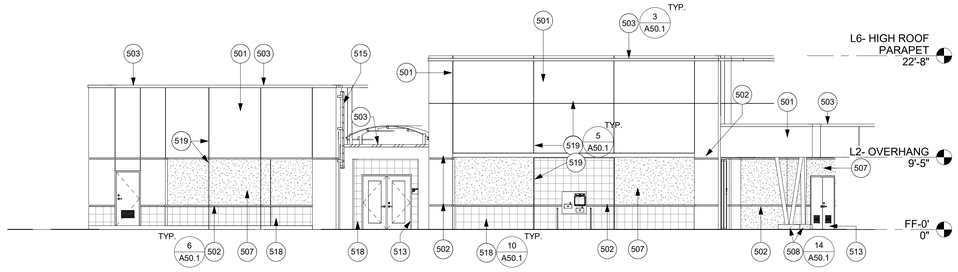

SOUTH ELEVATION | 1/8" = 1'-0" | 3

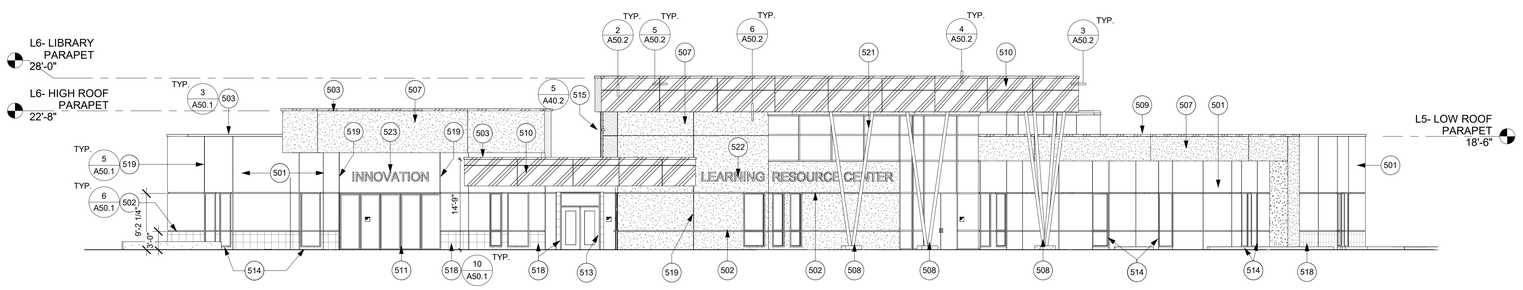

NORTH-WEST ELEVATION | 1" = 10'-0" | 4A

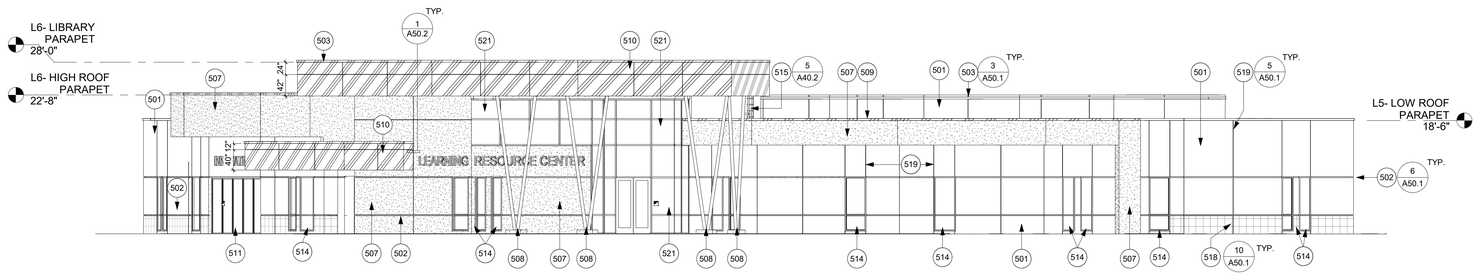

SOUTH-WEST ELEVATION | 1" = 10'-0" | 4B

EXTERIOR FINISH LEGEND

- EXTERIOR CEMENT PLASTER
- EXTERIOR CEMENT PLASTER, ACCENT COLOR
- ACCENT TILE WAINSCOTING
- METAL CLADDING

EXTERIOR ELEVATION KEYNOTES

501	7/8" EXT. CEMENT PLASTER
502	2" ALUMINUM REVEAL
503	PREFINISHED METAL PARAPET CAP
507	7/8" EXTERIOR CEMENT PLASTER TO RECEIVE ACCENT COLOR
508	STRUCTURAL COLUMNS TO RECEIVE PAINT
509	PREFINISHED METAL WALL CAP
510	METAL CLADDING
511	EXTERIOR OPERABLE GLASS WALL
513	HOLLOW METAL DOOR FRAME, SEE DOOR/WINDOW SCHEDULE
514	HOLLOW METAL WINDOW FRAME, SEE DOOR/WINDOW SCHEDULES
515	EXTERIOR WALL MOUNTED LADDER
518	SLATE TILE WAINSCOTING
519	1/2" PLASTER CONTROL JOINT
521	CURTAIN WALL GLAZING SYSTEM- DEFERRED APPROVAL
522	18" ALUMINUM SIGN TO READ "LEARNING RESOURCE CENTER". CENTER OF WALL AT ELEVATIONS SHOWN- SEE SPECS
523	18" ALUMINUM SIGN TO READ "INNOVATION". CENTER OF WALL AT ELEVATIONS SHOWN- SEE SPECS

EXTERIOR ELEVATIONS GENERAL NOTES

IDENTIFICATION STAMP
DIV. OF THE STATE ARCHITECT
APP. 04-118693 INC:
REVIEWED FOR
SS ☑ FLS ☑ ACS ☑
DATE: 03.13.2020

Revison	Date

Consultant

Engineer

studiowc
ARCHITECTURE + ENGINEERING
515 Encinitas Blvd, Ste. 201 Encinitas, California 92024
Telephone: (760) 634-8880 Fax: (760) 452-7541

LICENSED ARCHITECT
ROBERT D. WEBB
C-28036
OCTOBER 31, 2020
STATE OF CALIFORNIA

CHET F. HARRITT ELEM. SCHOOL
LRC & CLASSROOM ADDITION
SANTEE SCHOOL DISTRICT

BUILDING ELEVATIONS

Drawn: Author
Checked: Checker
Date: OCTOBER 18, 2019
Job: SSD-CFH-05

A5.1

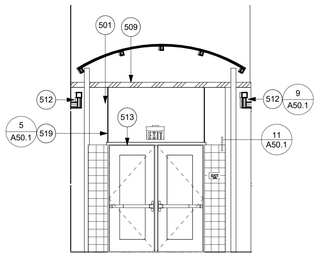

NORTH EXT. CORRIDOR- N | 1/4" = 1'-0" | 1

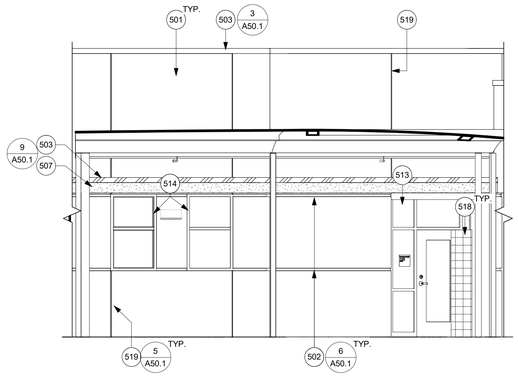

NORTH EXT. CORRIDOR- E | 1/4" = 1'-0" | 2

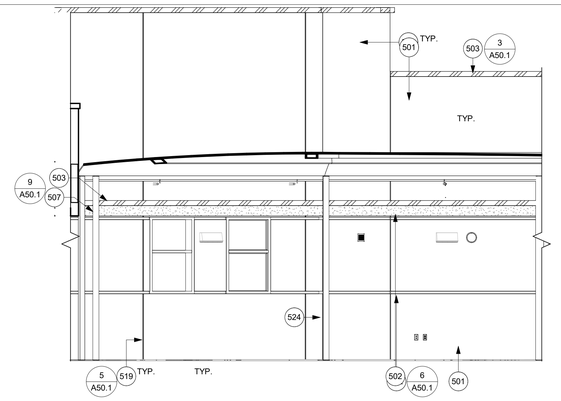

NORTH EXT. CORRIDOR- W | 1/4" = 1'-0" | 3

EXTERIOR FINISH LEGEND

- EXTERIOR CEMENT PLASTER
- EXTERIOR CEMENT PLASTER, ACCENT COLOR
- ACCENT TILE WAINSCOTING
- METAL CLADDING

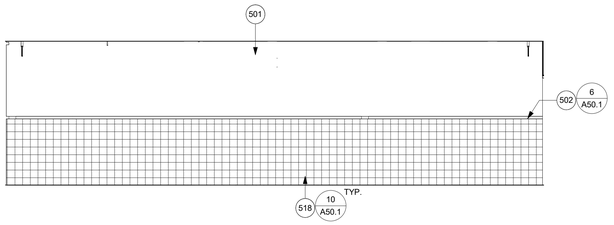

EAST EXT. CORRIDOR- N | 1/4" = 1'-0" | 4

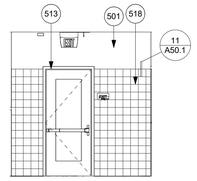

EAST EXT. CORRIDOR- E | 1/4" = 1'-0" | 5

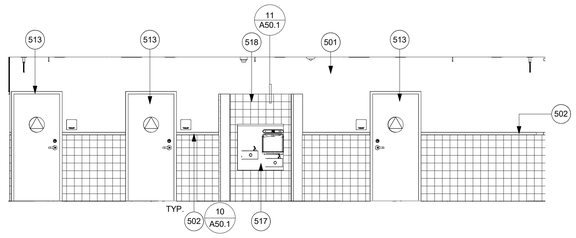

EAST EXT. CORRIDOR- S | 1/4" = 1'-0" | 6

KEYNOTES

501	7/8" EXT. CEMENT PLASTER
502	2" ALUMINUM REVEAL
503	PREFINISHED METAL PARAPET CAP
507	7/8" EXTERIOR CEMENT PLASTER TO RECEIVE ACCENT COLOR
509	PREFINISHED METAL WALL CAP
512	WALL SOFFIT WITH CONCEALED GUTTER, SEE TYP. DTL. REF'D ON PLAN
513	HOLLOW METAL DOOR FRAME, SEE DOOR/WINDOW SCHEDULE
514	HOLLOW METAL WINDOW FRAME, SEE DOOR/WINDOW SCHEDULES
515	EXTERIOR WALL MOUNTED LADDER
517	ACCESSIBLE DRINKING FOUNTAIN W/ BOTTLE FILLER. SEE PLUMBING DRAWINGS
518	SLATE TILE WAINSCOTING
519	1/2" PLASTER CONTROL JOINT
524	FUTURE STEEL COLUMNS AND CANOPY STRUCTURE ABOVE
525	EXTERIOR LIGHT FIXTURE, SEE ELECTRICAL

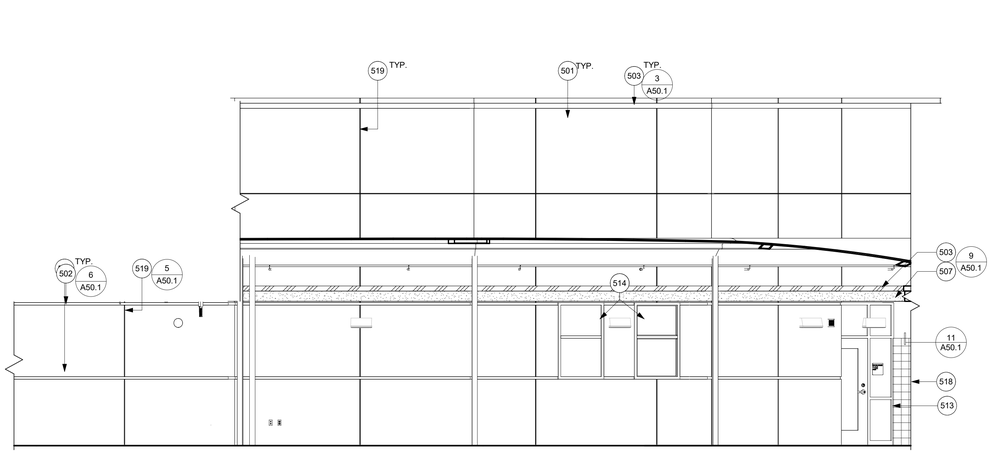

EXTERIOR CORRIDOR- E | 1/4" = 1'-0" | 7

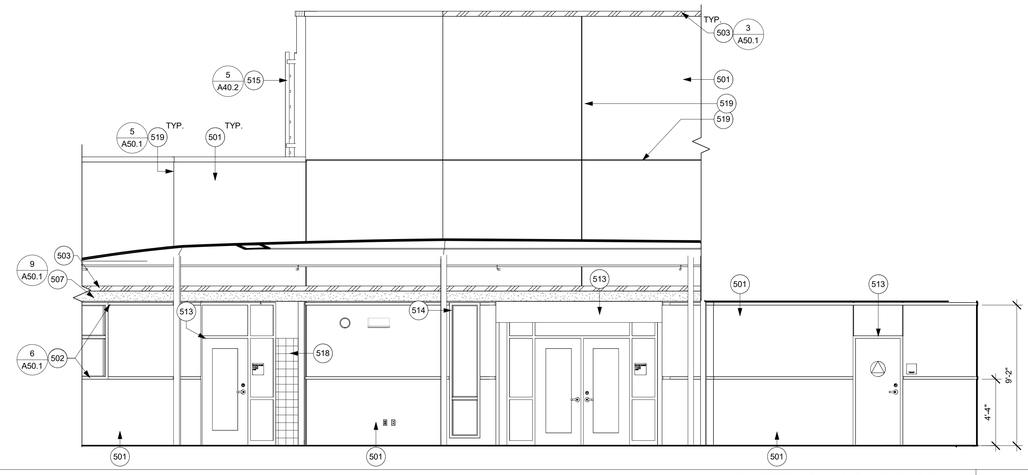

EXTERIOR CORRIDOR- W | 1/4" = 1'-0" | 8

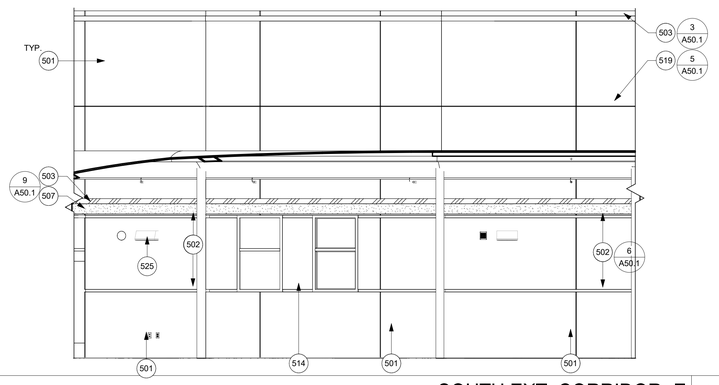

SOUTH EXT. CORRIDOR- E | 1/4" = 1'-0" | 9

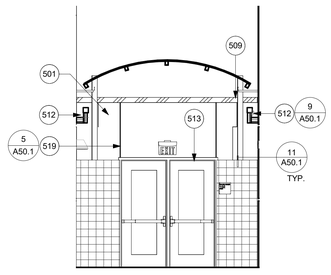

SOUTH EXT. CORRIDOR- S | 1/4" = 1'-0" | 10

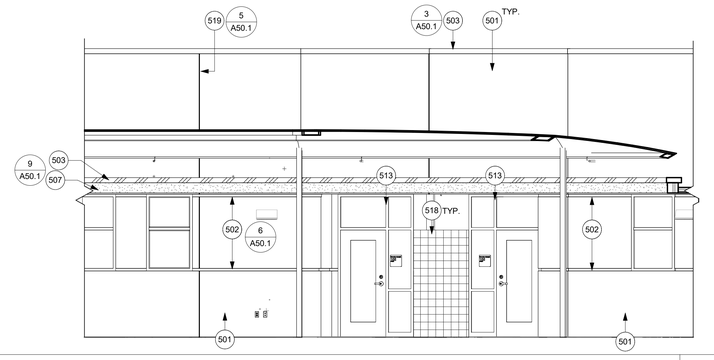

SOUTH EXT. CORRIDOR- W | 1/4" = 1'-0" | 11

IDENTIFICATION STAMP
DIV. OF THE STATE ARCHITECT
APP. 04-118693 INC:
REVIEWED FOR
SS ☑ FLS ☑ ACS ☑
DATE: 03.13.2020

Revison	Date

Consultant

Engineer

studiowc
ARCHITECTURE + ENGINEERING
515 Encinitas Blvd, Ste. 201, Encinitas, California 92024
Telephone: (760) 452-8880 Fax: (760) 452-7541

LICENSED ARCHITECT
ROBERT D. WEBB
C-28036
OCTOBER 31, 2021
STATE OF CALIFORNIA

CHET F. HARRITT ELEM. SCHOOL
LRC & CLASSROOM ADDITION
SANTEE SCHOOL DISTRICT

EXTERIOR CORRIDOR ELEVATIONS

Drawn: Author
Checked: Checker
Date: OCTOBER 18, 2019
Job: SSD-CFH-05

A5.2

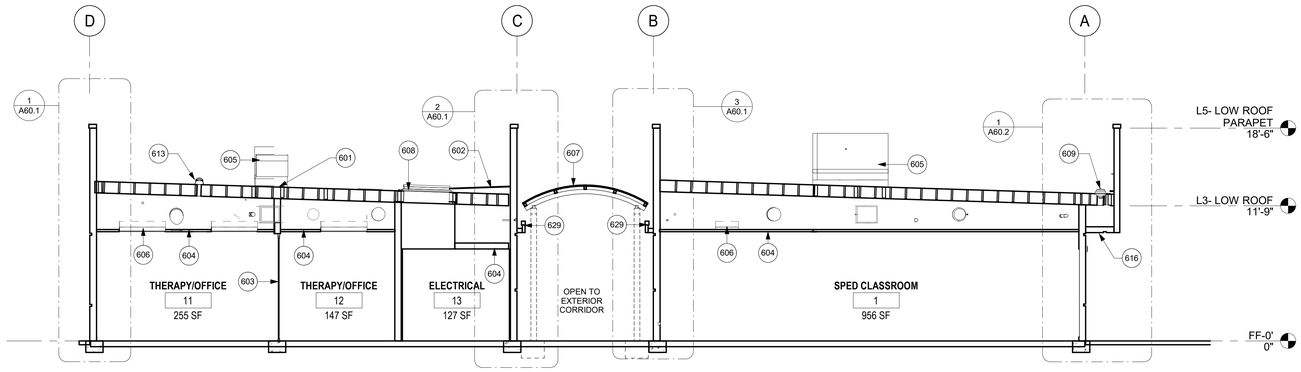

SECTION 1 | 3/16" = 1'-0" | 1

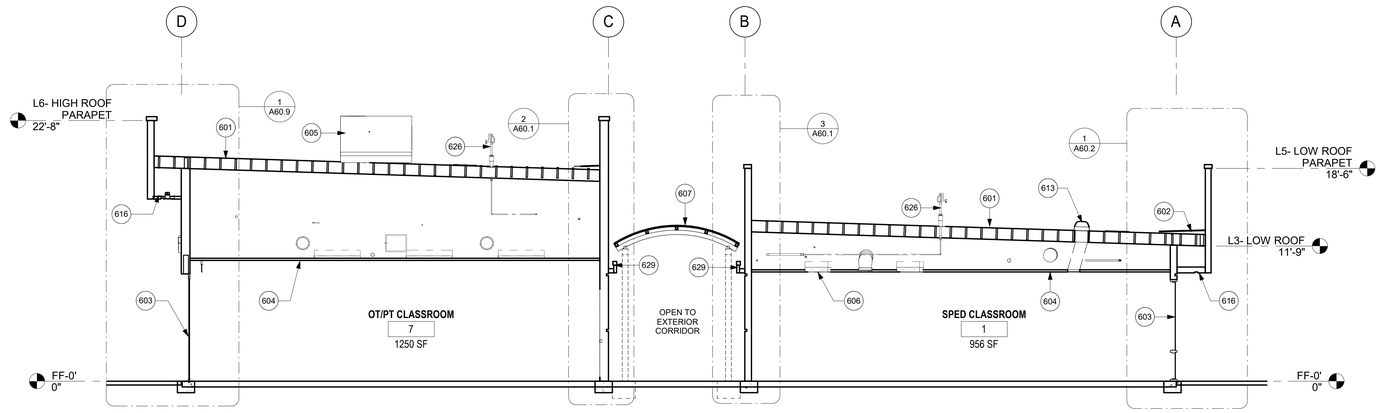

SECTION 2 | 3/16" = 1'-0" | 2

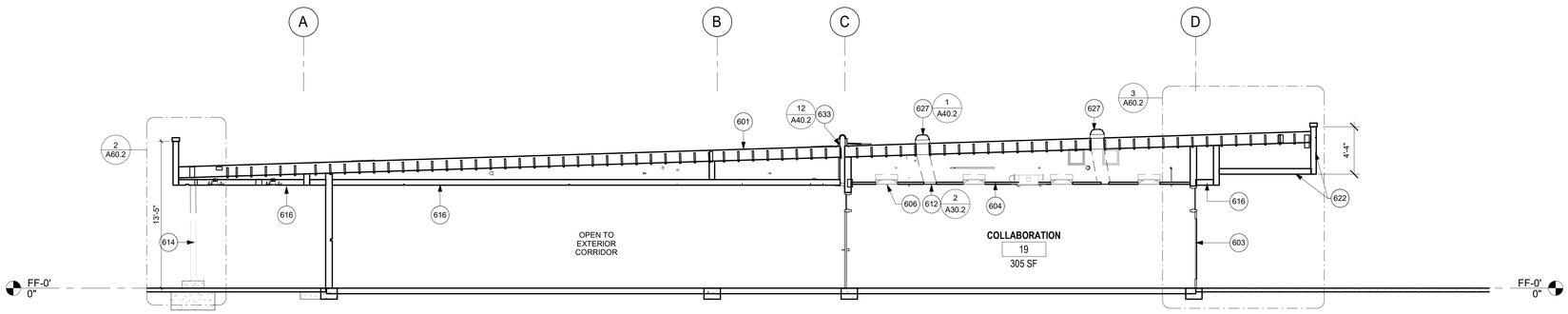

SECTION 3 | 3/16" = 1'-0" | 3

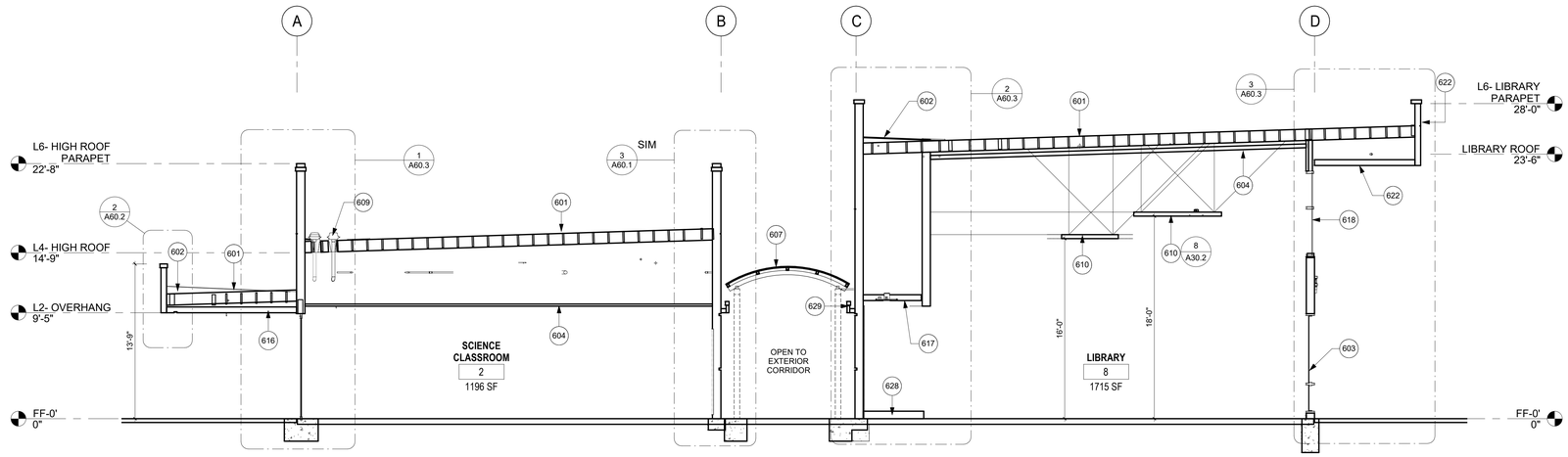

SECTION 4 | 3/16" = 1'-0" | 4

SECTION KEYNOTES

601	TPO ROOFING MATERIAL
602	CRICKET
603	DOOR / WINDOW FRAME - SEE SCHEDULE
604	CEILING, SEE SCHEDULE
605	ROOF MECHANICAL EQUIPMENT, SEE MECHANICAL DRAWINGS
606	LIGHT FIXTURE, SEE ELECTRICAL DRAWINGS
607	FUTURE TRANSLUCENT CANOPY
608	ROOF HATCH
609	ROOF DRAIN & OVERFLOW DRAIN, SEE PLUMBING DRAWINGS
610	FLOATING CEILING CLOUDS
612	SOLATUBE DIFFUSER
613	SOLATUBE DOME SKYLIGHT
614	STRUCTURAL COLUMNS
616	EXTERIOR PLASTER SOFFIT
617	INTERIOR GYPSUM BOARD SOFFIT
618	CURTAINWALL GLAZING SYSTEM- DEFERRED APPROVAL
622	METAL CLADDING
626	PLUMBING FIXTURE. SEE PLUMBING DRAWINGS
627	14" TUBULAR SKYLIGHT
628	RAISED READING STEPS
629	CONCEALED GUTTER SOFFIT, TYP.
633	SEISMIC CONTROL JOINT

IDENTIFICATION STAMP
DIV. OF THE STATE ARCHITECT
APP. 04-118693 INC:
REVIEWED FOR
SS ☑ FLS ☑ ACS ☑
DATE: 03.13.2020

Revison	Date

Consultant

Engineer

studiowc
ARCHITECTURE + ENGINEERING
515 Encinitas Blvd, Ste. 201, Encinitas, California 92024
Telephone: (760) 634-8800 Fax: (760) 452-7341

LICENSED ARCHITECT
ROBERT D. WEBB
C-28036
OCTOBER 31, 2021
STATE OF CALIFORNIA

CHET F. HARRITT ELEM. SCHOOL
LRC & CLASSROOM ADDITION
SANTEE SCHOOL DISTRICT

BUILDING SECTIONS

Drawn: Author
Checked: Checker
Date: OCTOBER 18, 2019
Job: SSD-CFH-05

A6.1

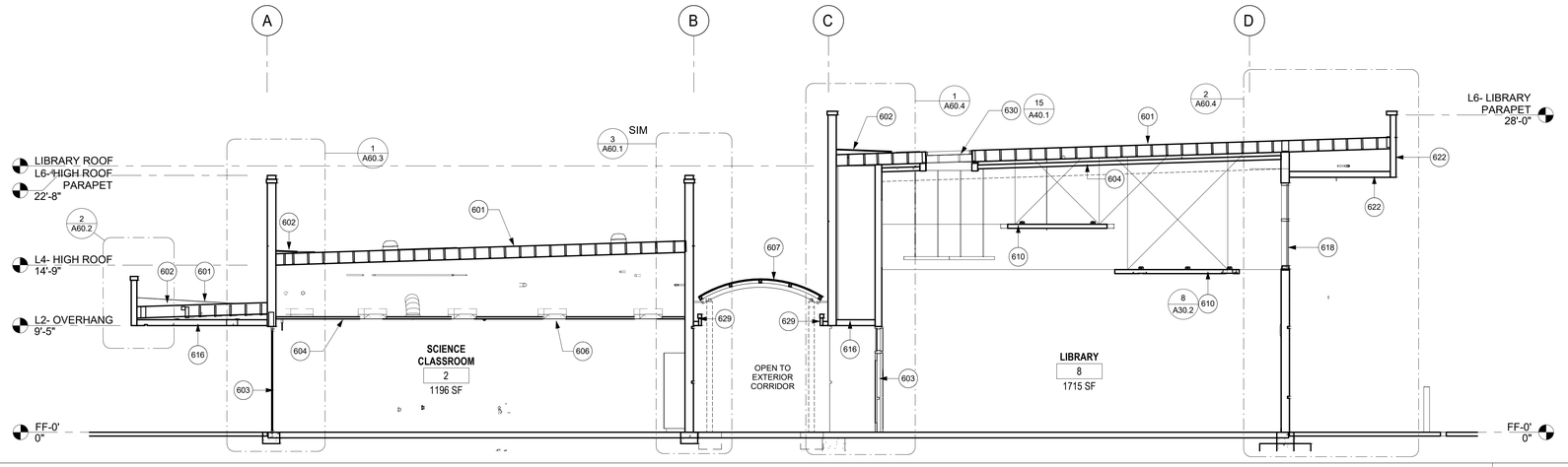

SECTION 5 | 3/16" = 1'-0" | 1

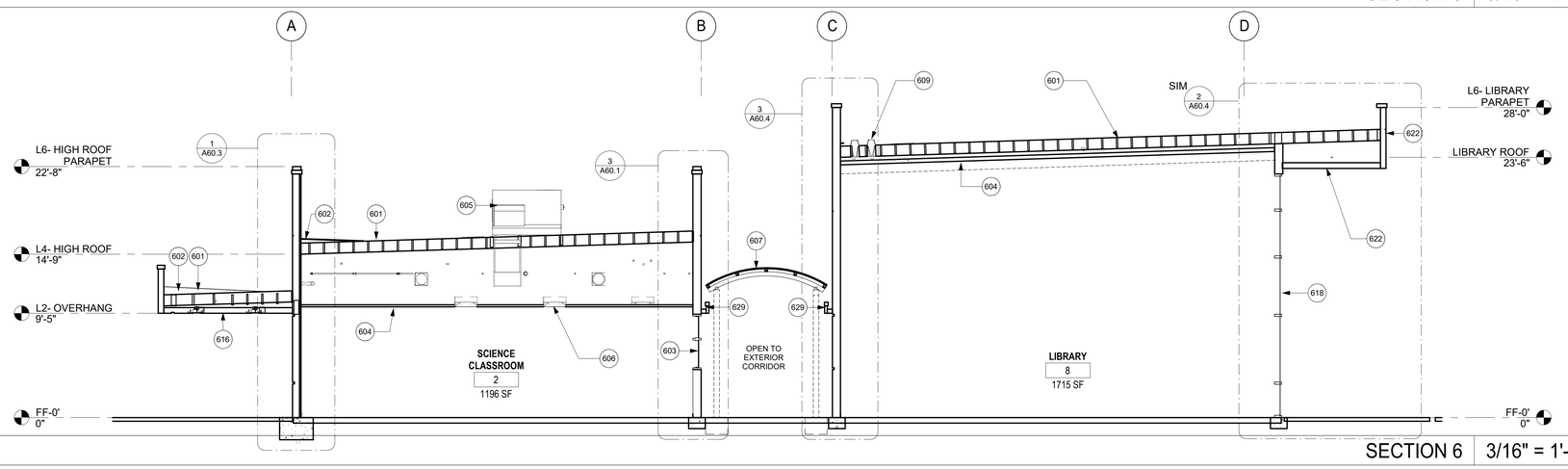

SECTION 6 | 3/16" = 1'-0" | 2

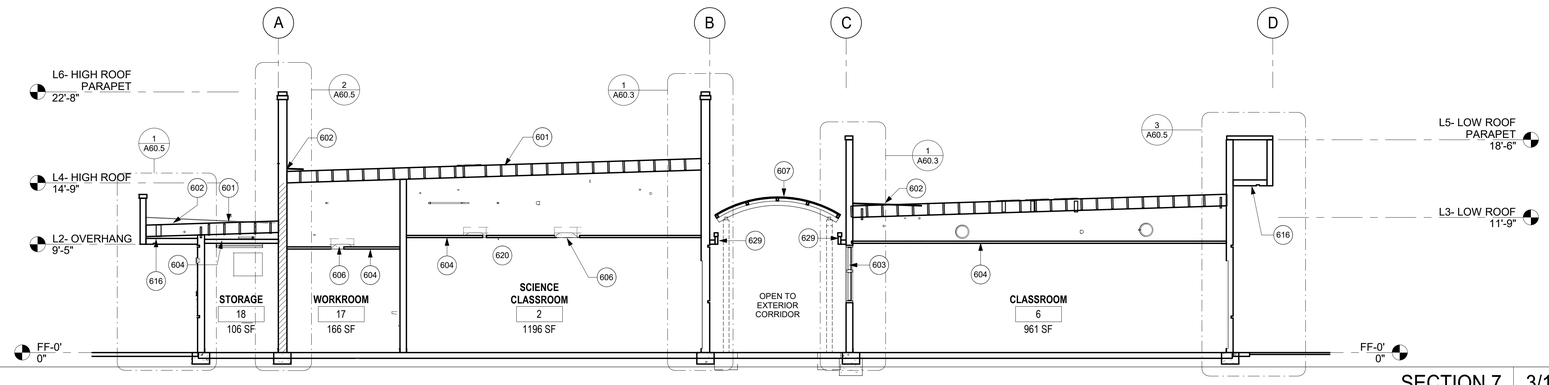

SECTION 7 | 3/16" = 1'-0" | 3

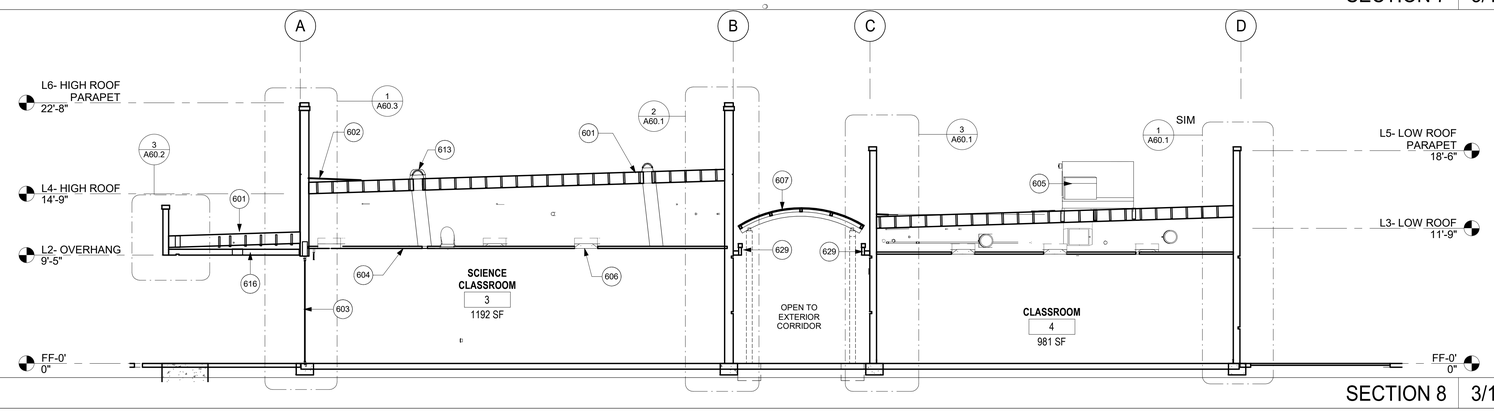

SECTION 8 | 3/16" = 1'-0" | 4

SECTION KEYNOTES

601	TPO ROOFING MATERIAL
602	CRICKET
603	DOOR / WINDOW FRAME - SEE SCHEDULE
604	CEILING, SEE SCHEDULE
605	ROOF MECHANICAL EQUIPMENT, SEE MECHANICAL DRAWINGS
606	LIGHT FIXTURE, SEE ELECTRICAL DRAWINGS
607	FUTURE TRANSLUCENT CANOPY
609	ROOF DRAIN & OVERFLOW DRAIN, SEE PLUMBING DRAWINGS
610	FLOATING CEILING CLOUDS
613	SOLATUBE DOME SKYLIGHT
616	EXTERIOR PLASTER SOFFIT
618	CURTAINWALL GLAZING SYSTEM- DEFERRED APPROVAL
622	METAL CLADDING
629	CONCEALED GUTTER SOFFIT, TYP.
630	SKYLIGHT 2X4

IDENTIFICATION STAMP
DIV. OF THE STATE ARCHITECT
APP. 04-118693 INC:
REVIEWED FOR
SS ☑ FLS ☑ ACS ☑
DATE: 03.13.2020

Revison	Date

Consultant

Engineer

studiowc
ARCHITECTURE + ENGINEERING
515 Encinitas Blvd, Ste 201 Encinitas, California 92024
Telephone: (760) 634-8800 Fax: (760)452-7341

LICENSED ARCHITECT
ROBERT D. WEBB
C-28036
OCTOBER 31, 2020
STATE OF CALIFORNIA

CHET F. HARRITT ELEM. SCHOOL
LRC & CLASSROOM ADDITION
SANTEE SCHOOL DISTRICT

BUILDING SECTIONS

Drawn: Author
Checked: Checker
Date: OCTOBER 18, 2019
Job: SSD-CFH-05

A6.2

SECTION KEYNOTES

601	TPO ROOFING MATERIAL
602	CRICKET
603	DOOR / WINDOW FRAME - SEE SCHEDULE
604	CEILING, SEE SCHEDULE
605	ROOF MECHANICAL EQUIPMENT, SEE MECHANICAL DRAWINGS
606	LIGHT FIXTURE, SEE ELECTRICAL DRAWINGS
607	FUTURE TRANSLUCENT CANOPY
610	FLOATING CEILING CLOUDS
612	SOLATUBE DIFFUSER
616	EXTERIOR PLASTER SOFFIT
618	CURTAINWALL GLAZING SYSTEM- DEFERRED APPROVAL
619	CASEWORK
622	METAL CLADDING
630	SKYLIGHT 2X4
631	BEAM PER STRUCTURAL

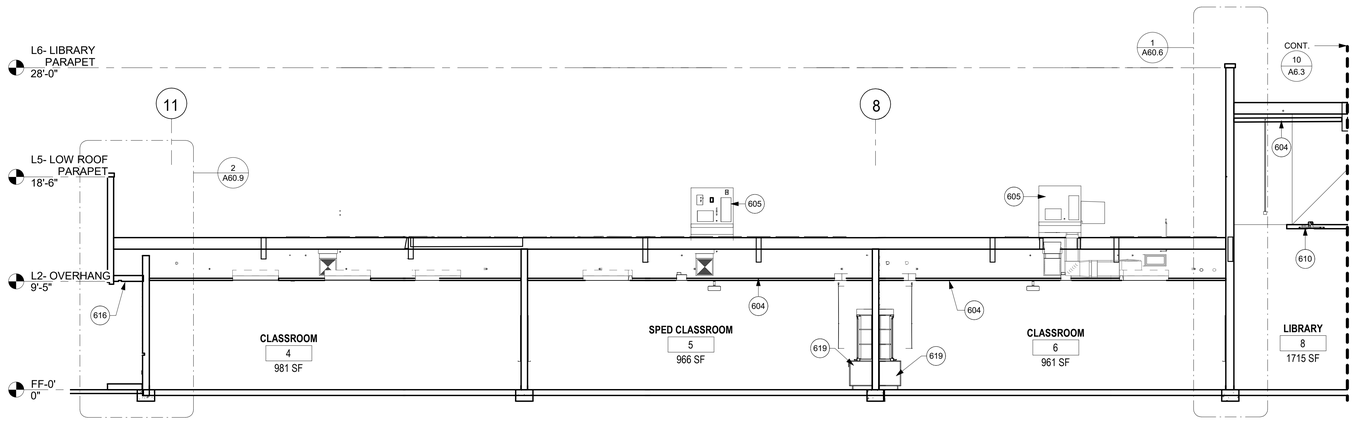

SECTION 9 | 3/16" = 1'-0" | 1

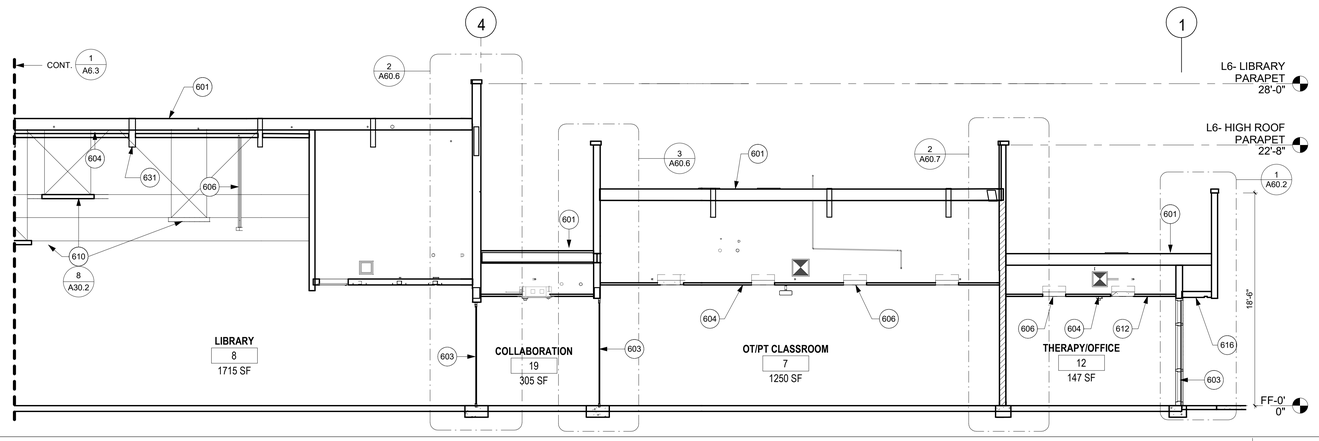

SECTION 9 CONT. | 3/16" = 1'-0" | 1A

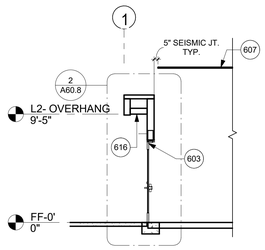

SECTION 10 | 3/16" = 1'-0" | 6

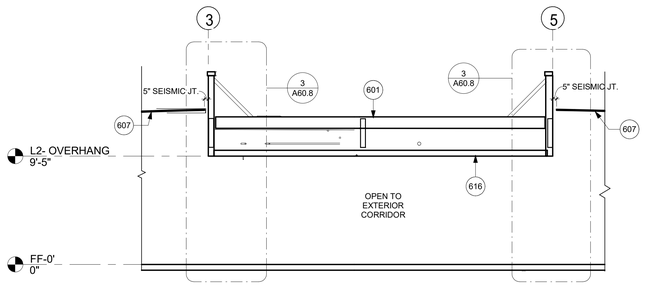

SECTION 11 | 3/16" = 1'-0" | 11

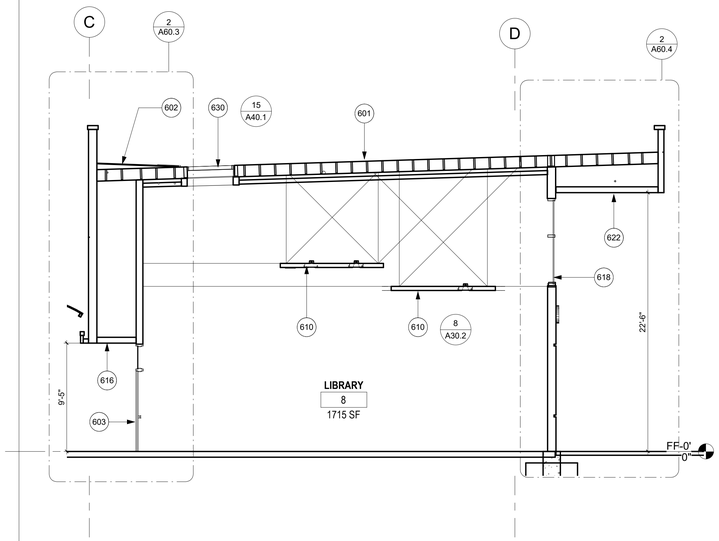

SECTION 14 | 3/16" = 1'-0" | 13

IDENTIFICATION STAMP
DIV. OF THE STATE ARCHITECT
APP. 04-118693 INC:
REVIEWED FOR
SS ☑ FLS ☑ ACS ☑
DATE: 03.13.2020

Revison	Date

Consultant

Engineer

studiowc
ARCHITECTURE + ENGINEERING
515 Encinitas Blvd, Ste. 201, Encinitas, California 92024
Telephone: (760) 632-8800 Fax: (760) 452-7341

LICENSED ARCHITECT ROBERT D. WEBB R.A. RDWebb C-28036 OCTOBER 31, 2021 STATE OF CALIFORNIA

CHET F. HARRITT ELEM. SCHOOL
LRC & CLASSROOM ADDITION
SANTEE SCHOOL DISTRICT

BUILDING SECTIONS

Drawn: Author
Checked: Checker
Date: OCTOBER 18, 2019
Job: SSD-CFH-05

A6.3

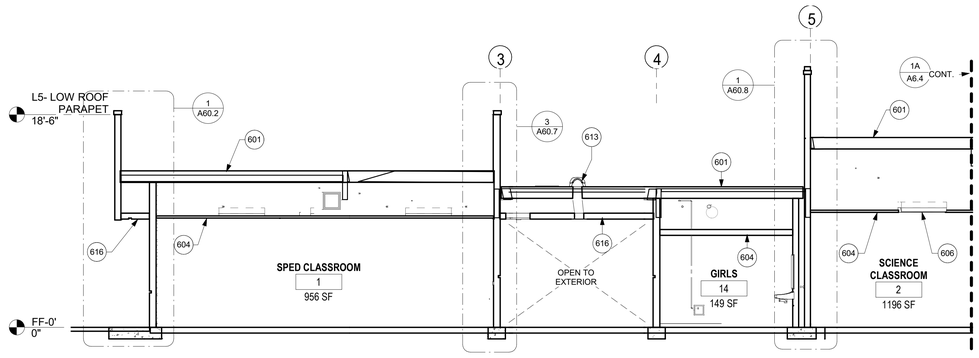

SECTION 12 | 3/16" = 1'-0" | 1

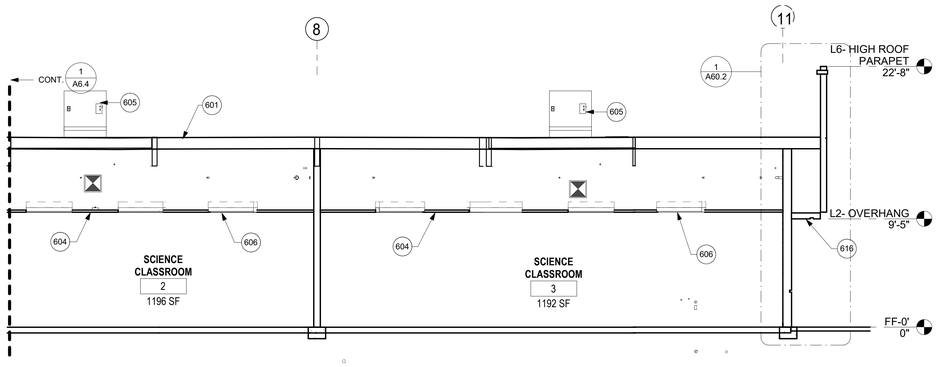

SECTION 12 CONT. | 3/16" = 1'-0" | 1A

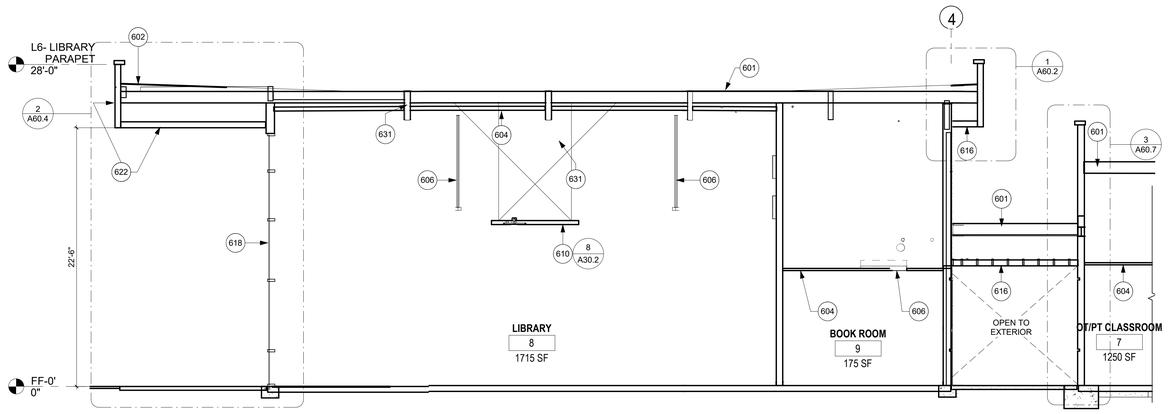

SECTION 13 | 3/16" = 1'-0" | 2

SECTION KEYNOTES

601	TPO ROOFING MATERIAL
602	CRICKET
604	CEILING, SEE SCHEDULE
605	ROOF MECHANICAL EQUIPMENT, SEE MECHANICAL DRAWINGS
606	LIGHT FIXTURE, SEE ELECTRICAL DRAWINGS
610	FLOATING CEILING CLOUDS
613	SOLATUBE DOME SKYLIGHT
616	EXTERIOR PLASTER SOFFIT
618	CURTAINWALL GLAZING SYSTEM- DEFERRED APPROVAL
622	METAL CLADDING
631	BEAM PER STRUCTURAL

IDENTIFICATION STAMP
DIV. OF THE STATE ARCHITECT
APP. 04-118693 INC:
REVIEWED FOR
SS ☑ FLS ☑ ACS ☑
DATE: 03.13.2020

Revison	Date

Consultant

Engineer

studiowc
ARCHITECTURE + ENGINEERING
515 Encinitas Blvd, Ste. 201, Encinitas, California 92024
Telephone: (760) 632-8800 Fax: (760) 452-7541

LICENSED ARCHITECT
ROBERT D. WEBB
C-28036
OCTOBER 31, 2021
STATE OF CALIFORNIA

CHET F. HARRITT ELEM. SCHOOL
LRC & CLASSROOM ADDITION
SANTEE SCHOOL DISTRICT

BUILDING SECTIONS

Drawn: Author
Checked: Checker
Date: OCTOBER 18, 2019
Job: SSD-CFH-05

A6.4

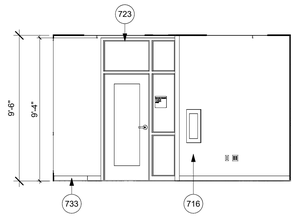

OFFICE 11 - N | 1/4" = 1'-0" | 1

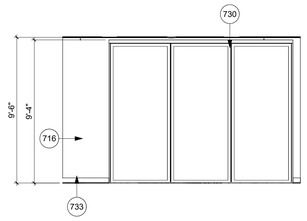

OFFICE 11 - E | 1/4" = 1'-0" | 2

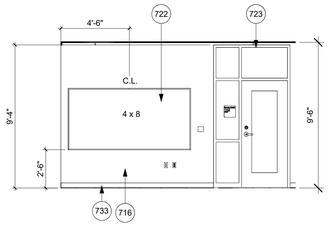

OFFICE 11 - S | 1/4" = 1'-0" | 3

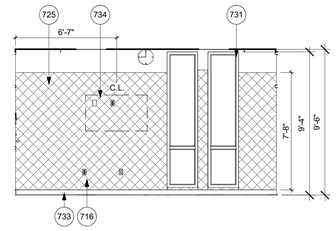

OFFICE 11 - W | 1/4" = 1'-0" | 4

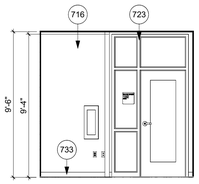

OFFICE 12 - N | 1/4" = 1'-0" | 5

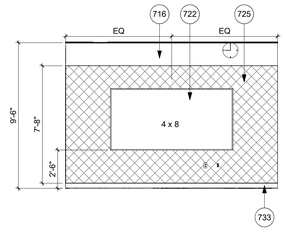

OFFICE 12 - E | 1/4" = 1'-0" | 6

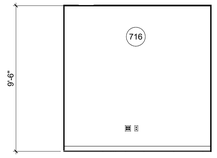

OFFICE 12 - S | 1/4" = 1'-0" | 7

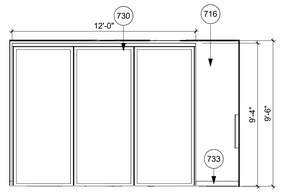

OFFICE 12 - W | 1/4" = 1'-0" | 8

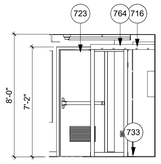

ELECTRICAL - N | 1/4" = 1'-0" | 9

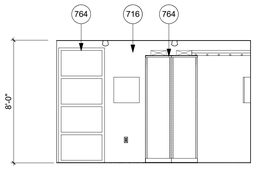

ELECTRICAL - E | 1/4" = 1'-0" | 11

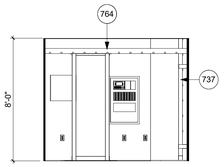

ELECTRICAL - S | 1/4" = 1'-0" | 12

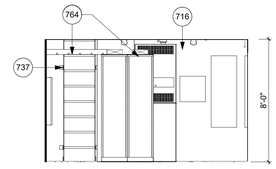

ELECTRICAL - W | 1/4" = 1'-0" | 10

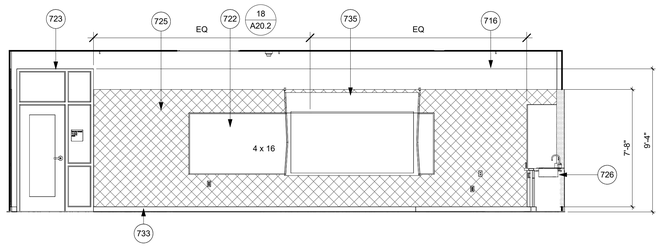

CLASSROOM 7 - N | 1/4" = 1'-0" | 13

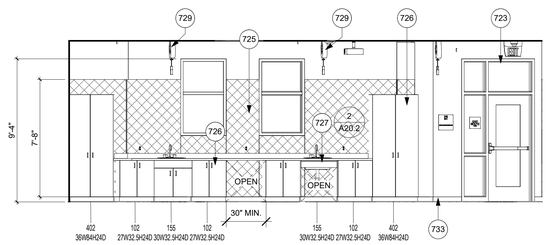

CLASSROOM 7- E | 1/4" = 1'-0" | 14

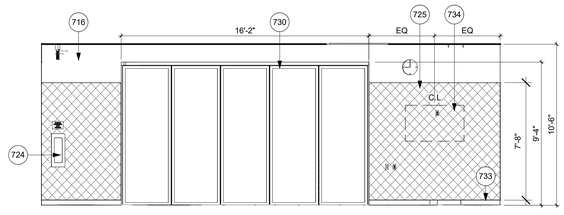

CLASSROOM 7 - S | 1/4" = 1'-0" | 15

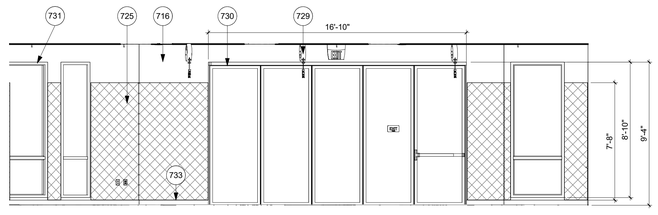

CLASSROOM 7 - W | 1/4" = 1'-0" | 16

INTERIOR ELEV. GENERAL NOTES

716	WALL TO RECEIVE TEXTURE AND PAINT
722	MARKER BOARD
723	HOLLOW METAL DOOR FRAME, SEE DOOR/WINDOW SCHEDULES
724	FIRE EXTINGUISHER
725	TACKABLE WALL PANELS
726	CASEWORK
727	ACCESSIBLE SINK AND CASE WORK
729	CEILING MOUNTED POWER CHORD REEL- SEE ELECTRICAL DRAWINGS HEIGHT TO BE ADJUSTED AND SET BY MAINTENANCE
730	OPERABLE WALL, SEE DOOR/WINDOW SCHEDULES
731	HOLLOW METAL WINDOW FRAME, SEE DOOR/WINDOW SCHEDULES
733	WALL BASE- SEE FINISH SCHEDULE
734	FUTURE 55" TELEVISION, OFOI, MAX PROJECTION FROM WALL NOT TO EXCEED 4", PROVIDE POWER, DATA AND BACKING
735	PROJECTOR SCREEN- SEE ELECTRICAL DRAWINGS
737	WALL MOUNTED LADDER
764	ELECTRICAL EQUIPMENT, TYP. SEE ELECTRICAL

INTERIOR FINISH LEGEND

- TACKABLE VINYL FINISH
- ACOUSTICAL PANEL
- ACCENT PAINT

INT. ELEV. GENERAL NOTES

1. SEE MECHANICAL PLUMBING, AND ELECTRICAL DRAWINGS FOR ADDITIONAL ITEMS
2. ALL WORK STATIONS WITH KNEE SPACE BELOW SHALL BE PROVIDED WITH 3" DIA. WIRE GROMMET CENTERED AT THE SPACE 3" FROM BACK WALL
3. ALL WALL MOUNTED CASEWORK SHALL BE PROVIDED WITH 4" REAR AND SIDE SPLASHES U.N.O. NOTCH AT WINDOW WHERE REQUIRED
4. SEE ROOM FINISH SCHEDULE FOR FINISH. FINISHES SHOWN ON THESE ELEVATIONS ARE TO CLARIFY WHERE MULTIPLE FINISHES ARE REQUIRED
5. GYPSUM BOARD TO BE FINISHED PER ROOM FINISH SCHEDULE- WHERE NOTED TO BE PAINTED PROVIDE TAPE AND TEXTURE. WEHRE VINYL OR PANEL FINISH IS REQUIRED PROVIDE TAPE FINISH

IDENTIFICATION STAMP
DIV. OF THE STATE ARCHITECT
APP. 04-118693 INC:
REVIEWED FOR
SS ☑ FLS ☑ ACS ☑
DATE: 03.13.2020

Revison	Date

Consultant

Engineer

studiowc
ARCHITECTURE + ENGINEERING
515 Encinitas Blvd, Ste 201 Encinitas, California 92024
Telephone: (760) 634-8800 Fax: (760) 452-7541

LICENSED ARCHITECT
ROBERT D. WEBB
C-28036
OCTOBER 31, 2021
STATE OF CALIFORNIA

CHET F. HARRITT ELEM. SCHOOL
LRC & CLASSROOM ADDITION
SANTEE SCHOOL DISTRICT

INTERIOR ELEVATIONS

Drawn: Author
Checked: Checker
Date: OCTOBER 18, 2019
Job: SSD-CFH-05

A7.1

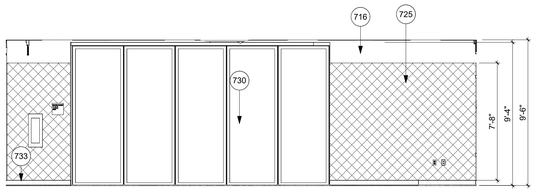

COLLAB RM - N | 1/4" = 1'-0" | 1

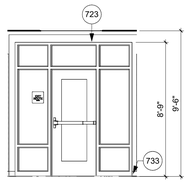

COLLAB RM - E | 1/4" = 1'-0" | 2

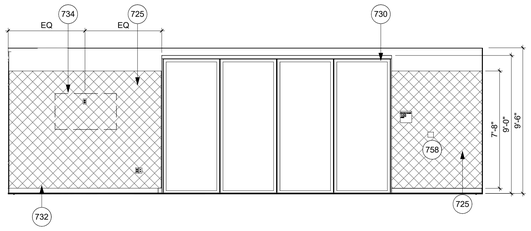

COLLAB RM - S | 1/4" = 1'-0" | 3

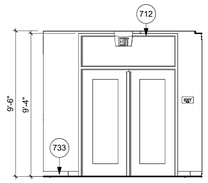

COLLAB RM - W | 1/4" = 1'-0" | 4

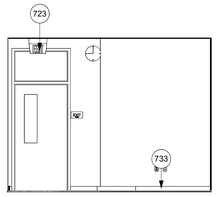

BOOK ROOM 9 - N | 1/4" = 1'-0" | 5

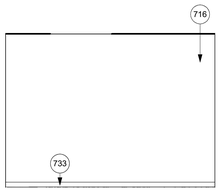

BOOK ROOM 9 - E | 1/4" = 1'-0" | 6

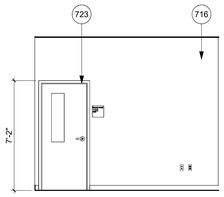

BOOK ROOM 9 - S | 1/4" = 1'-0" | 7

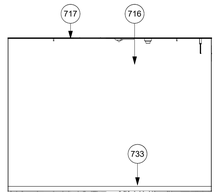

BOOK ROOM 9 - W | 1/4" = 1'-0" | 8

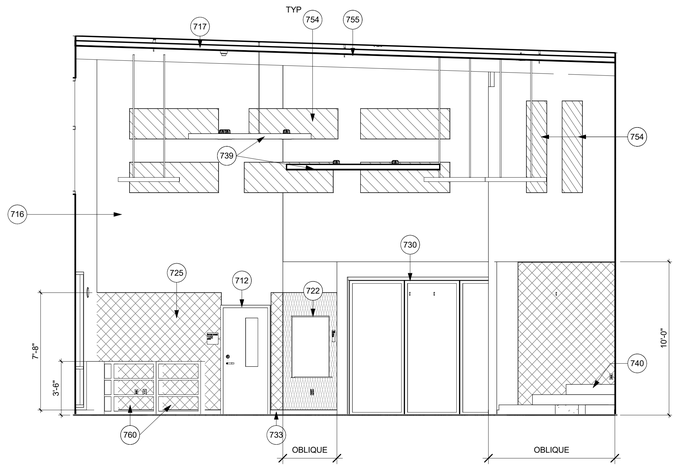

LIBRARY 8 - N | 1/4" = 1'-0" | 9

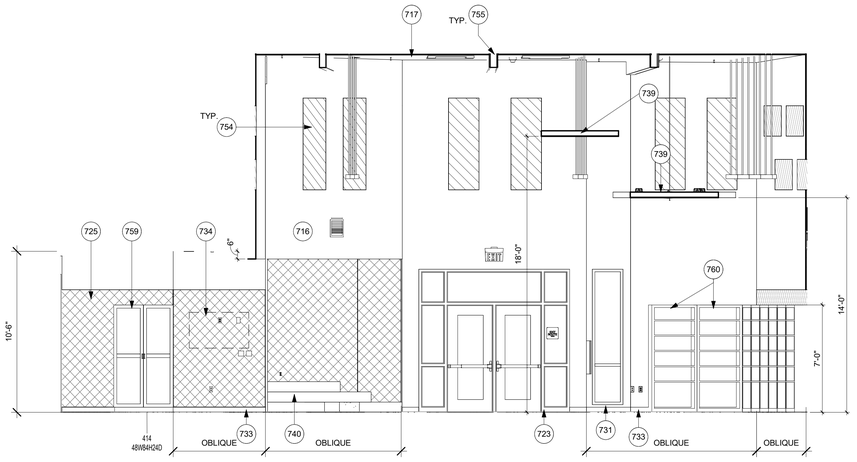

LIBRARY 8 - E | 1/4" = 1'-0" | 10

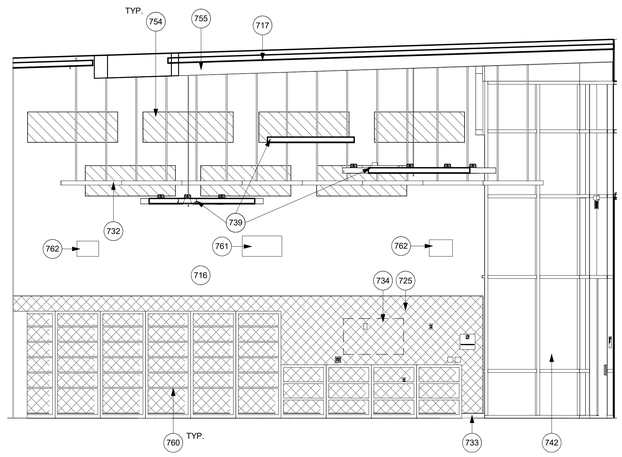

LIBRARY 8 - S | 1/4" = 1'-0" | 11

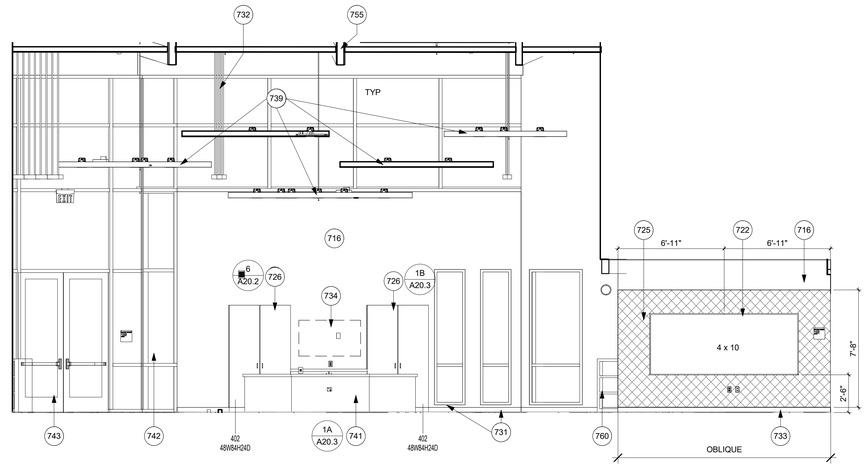

LIBRARY 8 - W | 1/4" = 1'-0" | 12

INTERIOR ELEVATION KEYNOTES

712	WALL TO RECEIVE TEXTURE AND ACCENT PAINT COLOR
716	WALL TO RECEIVE TEXTURE AND PAINT
717	GYPSUM CEILING - PREP AND PAINT
722	MARKER BOARD
723	HOLLOW METAL DOOR FRAME, SEE DOOR/WINDOW SCHEDULES
725	TACKABLE WALL PANELS
726	CASEWORK
730	OPERABLE WALL, SEE DOOR/WINDOW SCHEDULES
731	HOLLOW METAL WINDOW FRAME, SEE DOOR/WINDOW SCHEDULES
732	LIGHT FIXTURE, SEE ELECTRICAL
733	WALL BASE- SEE FINISH SCHEDULE
734	FUTURE 55" TELEVISION, OFOI, MAX PROJECTION FROM WALL NOT TO EXCEED 4". PROVIDE POWER, DATA AND BACKING
739	FLOATING ACOUSTIC CEILING CLOUDS.
740	RAISED READING AREA
741	LIBRARY RECEPTION DESK, SEE ENLARGED PLAN
742	CURTAIN WALL SYSTEM. SEE SHEET A8.1 AND DEFERRED APPROVAL
743	CURTAIN WALL GLASS DOOR, SEE DOOR/WINDOW SCHEDULES
754	ACOUSTIC WALL PANEL, 2' X 6'
755	EXPOSED BEAMS- PREMIUM GRADE FINISH. PROVIDE STAIN AND SEALER.
759	DISPLAY CABINET
760	BOOKSHELVES, OFOI. PROVIDE BACKING
761	RETURN AIR WALL GRILLE, SEE MECHANICAL DRAWINGS
762	SUPPLY AIR WALL GRILLE, SEE MECHANICAL DRAWINGS

INTERIOR FINISH LEGEND

- TACKABLE VINYL FINISH
- ACOUSTICAL PANEL
- ACCENT PAINT

INT. ELEV. GENERAL NOTES

1. SEE MECHANICAL PLUMBING, AND ELECTRICAL DRAWINGS FOR ADDITIONAL ITEMS
2. ALL WORK STATIONS WITH KNEE SPACE BELOW SHALL BE PROVIDED WITH 3" DIA. WIRE GROMMET CENTERED AT THE SPACE 3" FROM BACK WALL
3. ALL WALL MOUNTED CASEWORK SHALL BE PROVIDED WITH 4" REAR AND SIDE SPLASHES U.N.O. NOTCH AT WINDOW WHERE REQUIRED
4. SEE ROOM FINISH SCHEDULE FOR FINISH, FINISHES SHOWN ON THESE ELEVATIONS ARE TO CLARIFY WHERE MULTIPLE FINISHES ARE REQUIRED
5. GYPSUM BOARD TO BE FINISHED PER ROOM FINISH SCHEDULE- WHERE NOTED TO BE PAINTED PROVIDE TAPE AND TEXTURE. WEHRE VINYL OR PANEL FINISH IS REQUIRED PROVIDE TAPE FINISH

IDENTIFICATION STAMP
DIV. OF THE STATE ARCHITECT
APP. 04-118693 INC:
REVIEWED FOR
SS ☑ FLS ☑ ACS ☑
DATE: 03.13.2020

Date
Revison
Consultant
Engineer

studiowc
ARCHITECTURE + ENGINEERING
515 Encinitas Blvd, Ste 201, Encinitas, California 92024
Telephone: (760) 634-8880 Fax: (760) 452-7541

LICENSED ARCHITECT
ROBERT D. WEBB
C-28036
OCTOBER 31, 2021
STATE OF CALIFORNIA

CHET F. HARRITT ELEM. SCHOOL
LRC & CLASSROOM ADDITION
SANTEE SCHOOL DISTRICT

INTERIOR ELEVATIONS

Drawn: Author
Checked: Checker
Date: OCTOBER 18, 2019
Job: SSD-CFH-05

A7.2

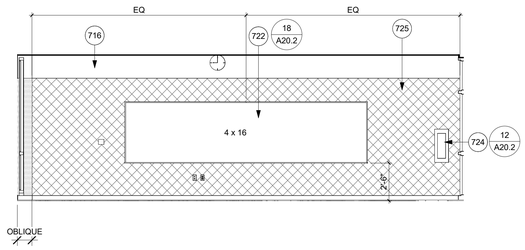

CLASSROOM 6- N | 1/4" = 1'-0" | 1

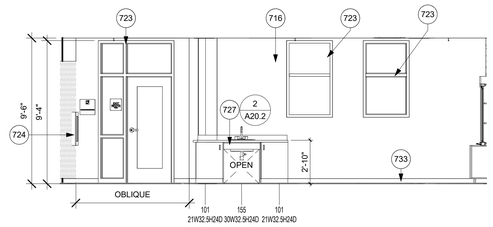

CLASSROOM 6- E | 1/4" = 1'-0" | 2

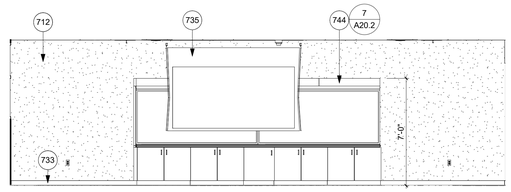

CLASSROOM 6- S | 1/4" = 1'-0" | 3

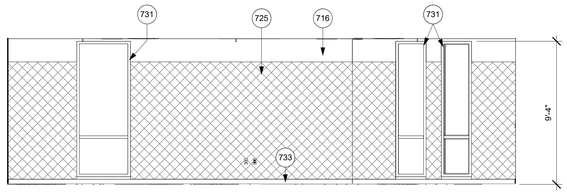

CLASSROOM 6- W | 1/4" = 1'-0" | 4

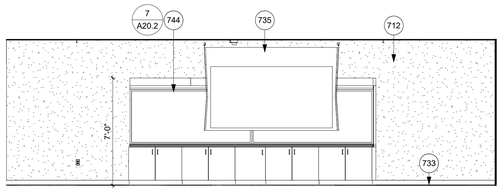

CLASSROOM 5- N | 1/4" = 1'-0" | 5

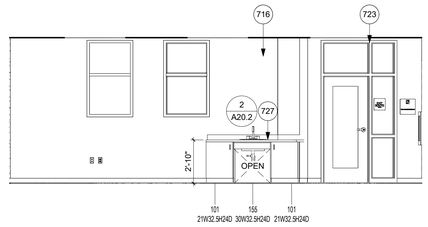

CLASSROOM 5- E | 1/4" = 1'-0" | 6

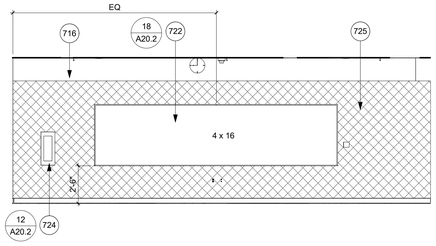

CLASSROOM 5- S | 1/4" = 1'-0" | 7

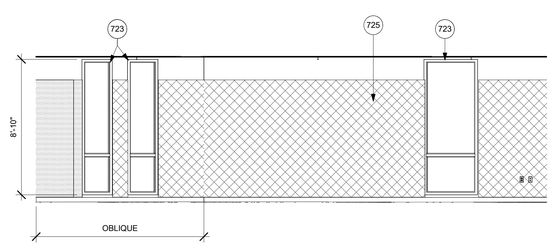

CLASSROOM 5- W | 1/4" = 1'-0" | 8

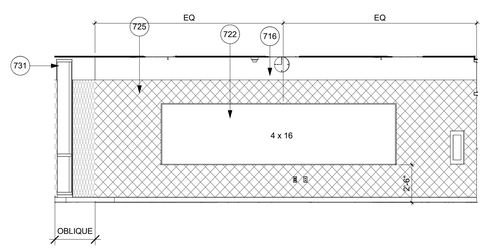

CLASSROOM 4- N | 1/4" = 1'-0" | 9

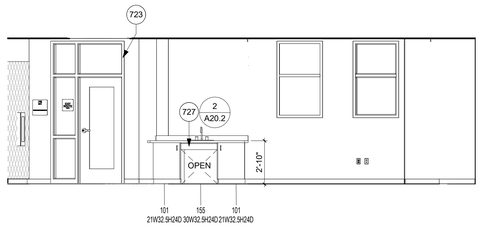

CLASSROOM 4- E | 1/4" = 1'-0" | 10

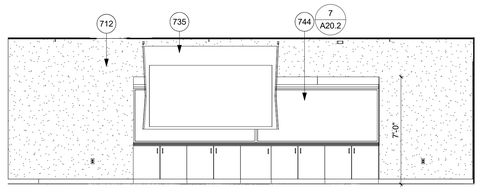

CLASSROOM 4- S | 1/4" = 1'-0" | 11

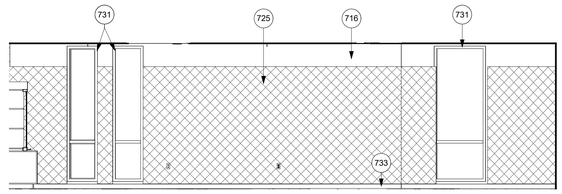

CLASSROOM 4- W | 1/4" = 1'-0" | 12

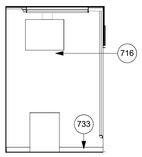

STORAGE- N | 1/4" = 1'-0" | 13

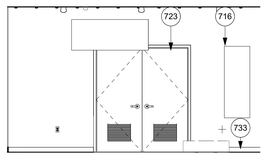

STORAGE- E | 1/4" = 1'-0" | 14

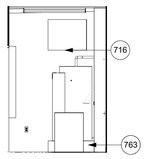

STORAGE- S | 1/4" = 1'-0" | 15

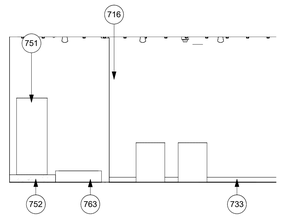

STORAGE- W | 1/4" = 1'-0" | 16

KEYNOTES

712	WALL TO RECEIVE TEXTURE AND ACCENT PAINT COLOR
716	WALL TO RECEIVE TEXTURE AND PAINT
722	MARKER BOARD
723	HOLLOW METAL DOOR FRAME, SEE DOOR/WINDOW SCHEDULES
724	FIRE EXTINGUISHER
725	TACKABLE WALL PANELS
727	ACCESSIBLE SINK AND CASE WORK
731	HOLLOW METAL WINDOW FRAME, SEE DOOR/WINDOW SCHEDULES
733	WALL BASE- SEE FINISH SCHEDULE
735	PROJECTOR SCREEN- SEE ELECTRICAL DRAWINGS
744	FUTURE TEACHING WALL OFOI
751	80 GALLON WATER HEATER
752	WATER HEATER CONCRETE PAD
763	FLOOR SINK, SEE PLUMBING

INTERIOR FINISH LEGEND

- TACKABLE VINYL FINISH
- ACOUSTICAL PANEL
- ACCENT PAINT

INT. ELEV. GENERAL NOTES

1. SEE MECHANICAL PLUMBING, AND ELECTRICAL DRAWINGS FOR ADDITIONAL ITEMS
2. ALL WORK STATIONS WITH KNEE SPACE BELOW SHALL BE PROVIDED WITH 3" DIA. WIRE GROMMET CENTERED AT THE SPACE 3" FROM BACK WALL
3. ALL WALL MOUNTED CASEWORK SHALL BE PROVIDED WITH 4" REAR AND SIDE SPLASHES U.N.O. NOTCH AT WINDOW WHERE REQUIRED
4. SEE ROOM FINISH SCHEDULE FOR FINISH. FINISHES SHOWN ON THESE ELEVATIONS ARE TO CLARIFY WHERE MULTIPLE FINISHES ARE REQUIRED
5. GYPSUM BOARD TO BE FINISHED PER ROOM FINISH SCHEDULE- WHERE NOTED TO BE PAINTED PROVIDE TAPE AND TEXTURE, WEHRE VINYL OR PANEL FINISH IS REQUIRED PROVIDE TAPE FINISH

IDENTIFICATION STAMP
DIV. OF THE STATE ARCHITECT
APP. 04-118693 INC:
REVIEWED FOR
SS ☑ FLS ☑ ACS ☑
DATE: 03.13.2020

Revison	Date

Consultant

Engineer

studiowc
ARCHITECTURE + ENGINEERING
515 Encinitas Blvd, Ste 201 Encinitas, California 92024
Telephone: (760)632-8800 Fax: (760)452-7541

LICENSED ARCHITECT
ROBERT D. WEBB
C-28036
OCTOBER 31, 2020
STATE OF CALIFORNIA

CHET F. HARRITT ELEM. SCHOOL
LRC & CLASSROOM ADDITION
SANTEE SCHOOL DISTRICT

INTERIOR ELEVATIONS

Drawn: Author
Checked: Checker
Date: OCTOBER 18, 2019
Job: SSD-CFH-05

A7.3

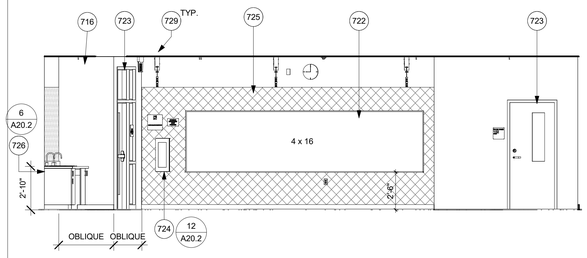

CLASSROOM 3- N | 1/4" = 1'-0" | 1

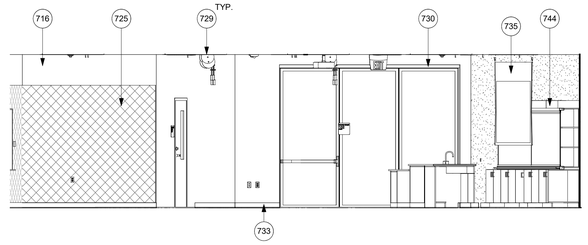

CLASSROOM 3- E | 1/4" = 1'-0" | 2

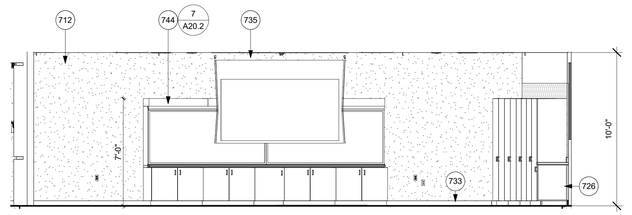

CLASSROOM 3- S | 1/4" = 1'-0" | 3

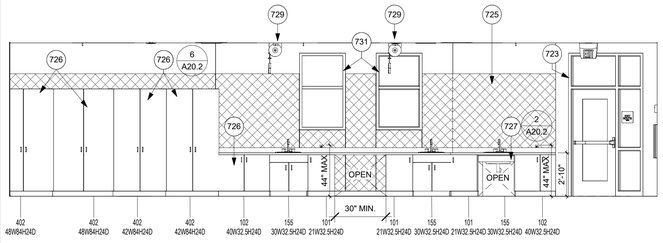

CLASSROOM 3- W | 1/4" = 1'-0" | 4

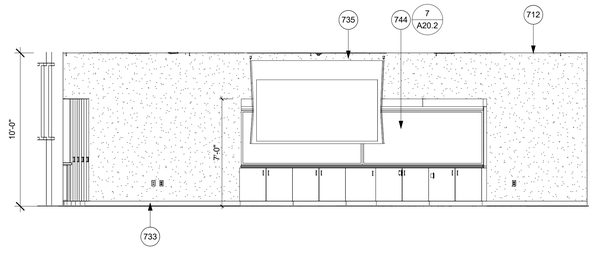

CLASSROOM 2- N | 1/4" = 1'-0" | 5

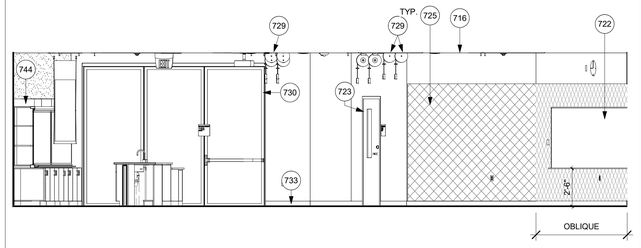

CLASSROOM 2- E | 1/4" = 1'-0" | 6

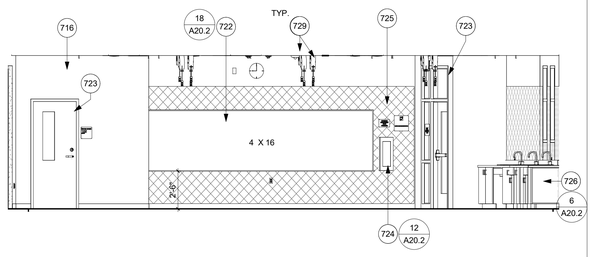

CLASSROOM 2- S | 1/4" = 1'-0" | 7

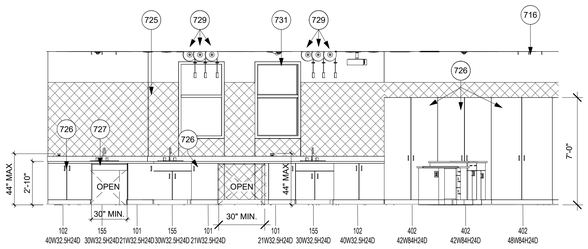

CLASSROOM 2- W | 1/4" = 1'-0" | 8

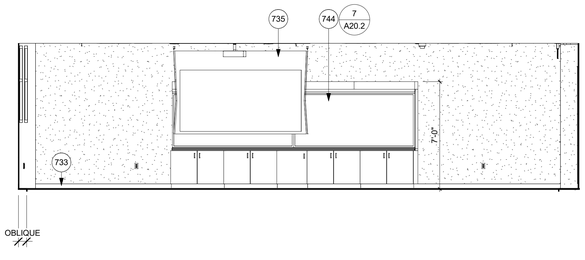

CLASSROOM 1- N | 1/4" = 1'-0" | 9

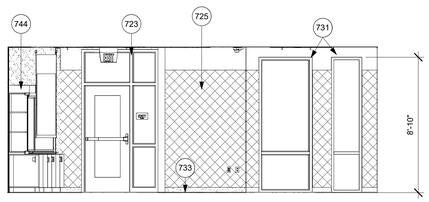

CLASSROOM 1- E | 1/4" = 1'-0" | 10

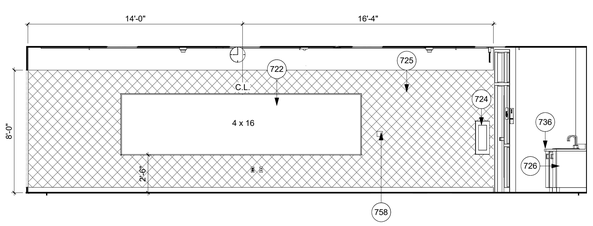

CLASSROOM 1- S | 1/4" = 1'-0" | 11

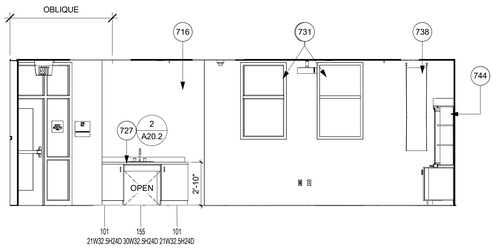

CLASSROOM 1- W | 1/4" = 1'-0" | 12

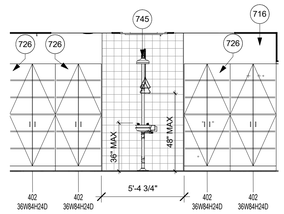

WORKROOM 17 - E | 1/4" = 1'-0" | 13

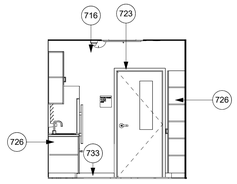

WORKROOM 17 - N | 1/4" = 1'-0" | 14

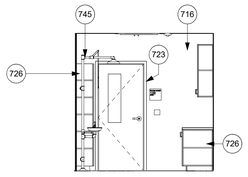

WORKROOM 17 - S | 1/4" = 1'-0" | 15

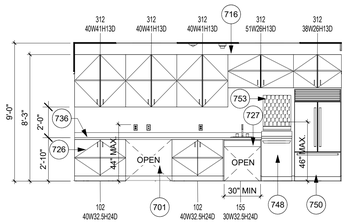

WORKROOM 17 - W | 1/4" = 1'-0" | 16

INT. ELEVATIONS KEYNOTES

701	30" X 48" REQUIRED CLEAR SPACE
712	WALL TO RECEIVE TEXTURE AND ACCENT PAINT COLOR
716	WALL TO RECEIVE TEXTURE AND PAINT
722	MARKER BOARD
723	HOLLOW METAL DOOR FRAME, SEE DOOR/WINDOW SCHEDULES
724	FIRE EXTINGUISHER
725	TACKABLE WALL PANELS
726	CASEWORK
727	ACCESSIBLE SINK AND CASE WORK
729	CEILING MOUNTED POWER CHORD REEL- SEE ELECTRICAL DRAWINGS HEIGHT TO BE ADJUSTED AND SET BY MAINTENANCE
730	OPERABLE WALL, SEE DOOR/WINDOW SCHEDULES
731	HOLLOW METAL WINDOW FRAME, SEE DOOR/WINDOW SCHEDULES
732	LIGHT FIXTURE, SEE ELECTRICAL
733	WALL BASE- SEE FINISH SCHEDULE
735	PROJECTOR SCREEN- SEE ELECTRICAL DRAWINGS
736	PLASTIC LAMINATE COUNTERTOP WITH 4" BACKSPLASH AND PROVIDE SIDE SPLASH AT ADJOINING WALLS
738	HATCH CEILING ACCESS
744	FUTURE TEACHING WALL, OFOI
745	EMERGENCY EYE WASH AND DRENCH SHOWER
746	DEMONSTRATION TABLE
748	DISHWASHER, OFCI
750	30" REFRIGERATOR, OFCI. SHALL COMPLY WITH CBC 11B-804.6.6
753	BOTTLE DRYING RACK
758	PROVIDE THERMOSTAT

INTERIOR FINISH LEGEND

- TACKABLE VINYL FINISH
- ACOUSTICAL PANEL
- ACCENT PAINT

INT. ELEV. GENERAL NOTES

1. SEE MECHANICAL PLUMBING, AND ELECTRICAL DRAWINGS FOR ADDITIONAL ITEMS
2. ALL WORK STATIONS WITH KNEE SPACE BELOW SHALL BE PROVIDED WITH 3" DIA. WIRE GROMMET CENTERED AT THE SPACE 3" FROM BACK WALL
3. ALL WALL MOUNTED CASEWORK SHALL BE PROVIDED WITH 4" REAR AND SIDE SPLASHES U.N.O. NOTCH AT WINDOW WHERE REQUIRED
4. SEE ROOM FINISH SCHEDULE FOR FINISH. FINISHES SHOWN ON THESE ELEVATIONS ARE TO CLARIFY WHERE MULTIPLE FINISHES ARE REQUIRED
5. GYPSUM BOARD TO BE FINISHED PER ROOM FINISH SCHEDULE- WHERE NOTED TO BE PAINTED PROVIDE TAPE AND TEXTURE, WEHRE VINYL OR PANEL FINISH IS REQUIRED PROVIDE TAPE FINISH

IDENTIFICATION STAMP
DIV. OF THE STATE ARCHITECT
APP. 04-118693 INC:
REVIEWED FOR
SS ☑ FLS ☑ ACS ☑
DATE: 03.13.2020

Revison | Date

Consultant

Engineer

studiowc
ARCHITECTURE + ENGINEERING
515 Encinitas Blvd, Ste 201 Encinitas, California 92024
Telephone: (760) 634-8880 Fax: (760) 452-7541

LICENSED ARCHITECT
ROBERT D. WEBB
C-28036
OCTOBER 31, 2020
STATE OF CALIFORNIA

CHET F. HARRITT ELEM. SCHOOL
LRC & CLASSROOM ADDITION
SANTEE SCHOOL DISTRICT

INTERIOR ELEVATIONS

Drawn: Author
Checked: Checker
Date: OCTOBER 18, 2019
Job: SSD-CFH-05

A7.4

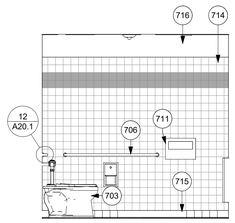

STAFF TOILET- N | 3/8" = 1'-0" | 1

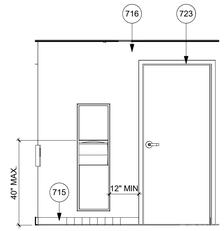

STAFF TOILET- E | 3/8" = 1'-0" | 2

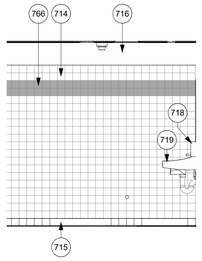

STAFF TOILET-S | 3/8" = 1'-0" | 3

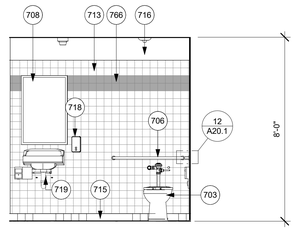

STAFF TOILET- W | 3/8" = 1'-0" | 4

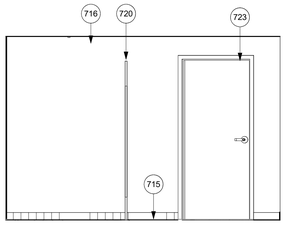

GIRLS- N | 3/8" = 1'-0" | 5

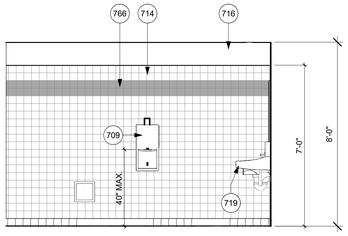

GIRLS- E | 3/8" = 1'-0" | 6

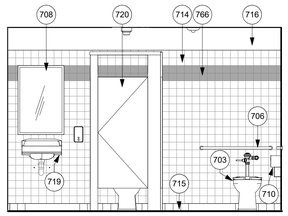

GIRLS- S | 3/8" = 1'-0" | 7

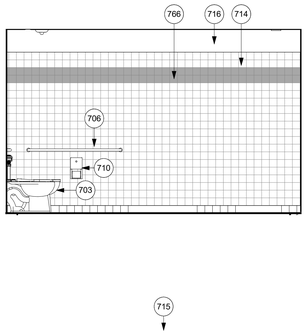

GIRLS- W | 3/8" = 1'-0" | 8

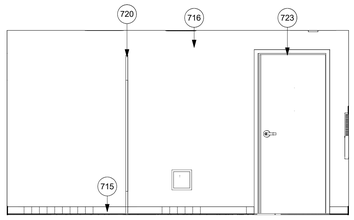

BOYS- N | 3/8" = 1'-0" | 9

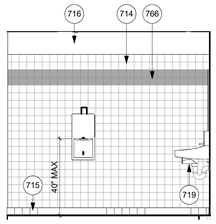

BOYS- E | 3/8" = 1'-0" | 10

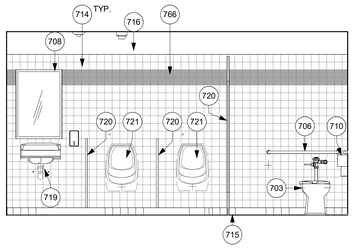

BOYS- S | 3/8" = 1'-0" | 11

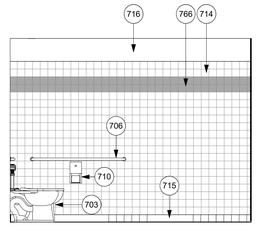

BOYS- W | 3/8" = 1'-0" | 12

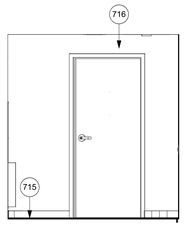

STUDENT- N | 3/8" = 1'-0" | 13

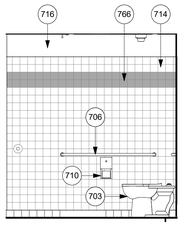

STUDENT- E | 3/8" = 1'-0" | 14

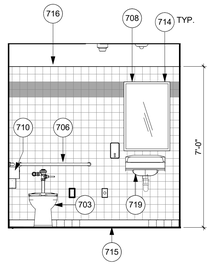

STUDENT- S | 3/8" = 1'-0" | 15

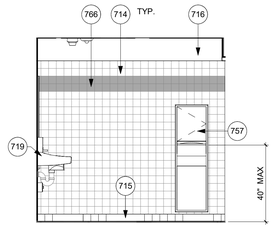

STUDENT- W | 3/8" = 1'-0" | 16

INTERIOR ELEVATION KEYNOTES

703	ACCESSIBLE TOILET, SEE PLUMBING
706	GRAB BAR
708	MIRROR
709	ELECTRIC HAND DRYER. NOT TO EXCEED 4" PROJECTION
710	RECESSED TOILET TISSUE DISPENSER
711	SEAT COVER DISPENSER
713	SOLID PLASTIC TOILET COMPARTMENT PARTITIONS, SEE DETAIL DRAWINGS
714	CERAMIC TILE AND BACKING
715	CERAMIC TILE BASE
716	WALL TO RECEIVE TEXTURE AND PAINT
718	SOAP DISPENSER, OFOI
719	ACCESSIBLE SINK, SEE PLUMBING
720	SOLID PLASTIC TOILET COMPARTMENT PARTITIONS
721	ACCESSIBLE URINAL, SEE PLUMBING
723	HOLLOW METAL DOOR FRAME, SEE DOOR/WINDOW SCHEDULES
757	PAPER TOWEL AND TRASH DISPENSER COMBO UNIT
766	ACCENT WALL TILE

GENERAL NOTES

FOR MOUNTING HEIGHTS AND DIMENSIONS, SEE DETAIL 5/A20.1

IDENTIFICATION STAMP
DIV. OF THE STATE ARCHITECT
APP. 04-118693 INC:
REVIEWED FOR
SS ☑ FLS ☑ ACS ☑
DATE: 03.13.2020

Revison	Date

Consultant

Engineer

studiowc
ARCHITECTURE + ENGINEERING
515 Encinitas Blvd, Ste. 201, Encinitas, California 92024
Telephone: (760) 634-8800 Fax: (760) 452-7341

LICENSED ARCHITECT
ROBERT D. WEBB
C-28036
OCTOBER 31, 2021
STATE OF CALIFORNIA

CHET F. HARRITT ELEM. SCHOOL
LRC & CLASSROOM ADDITION
SANTEE SCHOOL DISTRICT

INTERIOR ELEVATIONS- TOILET ROOMS

Drawn: Author
Checked: Checker
Date: OCTOBER 18, 2019
Job: SSD-CFH-05

A7.5

DOOR SCHEDULE

DOOR NO.	ROOM NAME	DOOR WIDTH	DOOR HEIGHT	DOOR THICKNESS	DOOR TYPE	DOOR FINISH	DOOR CONSTRUCTION	DOOR GLASS TYPE	DOOR FIRE RATING	FRAME TYPE	FRAME FINISH	FRAME CONSTRUCTION	FRAME GLAZING TYPE	HARDWARE GROUP	HARDWARE INSIDE LOCKABLE	HARDWARE PANIC HARDWARE	HARDWARE THRESHOLD REDUCER	NOTES
001	SPED CLASSROOM	3'-0"	7'-0"	1 3/4"	4	PT	HM	2	--	B	PT	HM	2	CLS-OS	Yes	No	Yes	
001A	SPED CLASSROOM	3'-0"	7'-0"	1 3/4"	4	PT	HM	2	--	B	PT	HM	2	LV-EXT	Yes	No	Yes	
002	SCIENCE CLASSROOM	3'-0"	7'-0"	1 3/4"	4	PT	HM	2	--	B	PT	HM	2	ED1	Yes	Yes	Yes	
002A	SCIENCE CLASSROOM	12'-0"	9'-4"	1 3/4"	8	--	GLASS	2	--	H	--	ALUM	--	FLD2	Yes	Yes	Yes	BLOCK OUT SLAB AS REQ'D FOR FLUSH SILL. PROVIDE EGRESS SWING DOOR W/ P.H.
002B	WORKROOM	3'-0"	7'-0"	1 3/4"	3	PT	WD	1	--	D	PT	HM	--	CLS-OS1	No	No	No	
003	SCIENCE CLASSROOM	3'-0"	7'-0"	1 3/4"	4	PT	HM	2	--	B	PT	HM	2	ED1	Yes	Yes	Yes	
003A	SCIENCE CLASSROOM	12'-0"	9'-4"	1 3/4"	8	--	GLASS	2	--	H	--	ALUM	--	FLD2	Yes	Yes	Yes	BLOCK OUT SLAB AS REQ'D FOR FLUSH SILL. PROVIDE EGRESS SWING DOOR W/ P.H.
003B	WORKROOM	3'-0"	7'-0"	1 3/4"	3	PT	WD	1	--	D	PT	HM	--	CLS-OS1	No	No	No	
004	CLASSROOM	3'-0"	7'-0"	1 3/4"	4	PT	HM	2	--	B	PT	HM	2	CLS-OS	Yes	No	Yes	
005	SPED CLASSROOM	3'-0"	7'-0"	1 3/4"	4	PT	HM	2	--	B	PT	HM	2	CLS-OS	Yes	No	Yes	
006	CLASSROOM	3'-0"	7'-0"	1 3/4"	4	PT	HM	2	--	B	PT	HM	2	CLS-OS	Yes	Yes	Yes	
007	OT/PT CLASSROOM	3'-0"	7'-0"	1 3/4"	4	PT	HM	2	--	B	PT	HM	2	ED1	Yes	Yes	Yes	
007A	OT/PT CLASSROOM	17'-0"	9'-4"	1 3/4"	6	--	GLASS	2	--	H	--	ALUM	--	FLD2	Yes	Yes	Yes	BLOCK OUT SLAB AS REQ'D FOR FLUSH SILL. PROVIDE EGRESS SWING DOOR W/ P.H.
007B	OT/PT CLASSROOM	17'-0"	9'-4"	1 3/4"	6	--	GLASS	1	--	H	--	ALUM	--	FLD1	Yes	No	No	BLOCK OUT SLAB AS REQ'D FOR FLUSH SILL
008	LIBRARY	6'-0"	9'-2"	2"	5	--	GLASS	2	--	--	--	--	2	AL-ED-OS	Yes			SEE CURTAIN WALL ELEVATIONS
008A	LIBRARY	6'-0"	7'-2"	1 3/4"	4	PT	HM	2	--	E	--	HM	2	AL-ED-OS1	Yes	Yes	Yes	PROVIDE REMOVABLE MULLION
008B	COLLABORATION	15'-0"	9'-0"	1 3/4"	7	--	GLASS	1	--	H	--	ALUM	--	FLD1	Yes	No	No	BLOCK OUT SLAB AS REQ'D FOR FLUSH SILL
009	BOOK ROOM	3'-6"	7'-0"	1 3/4"	3	PT	HM	2	--	C	PT	HM	2	LV-EXT	No	No	Yes	
009A	LIBRARY	3'-0"	7'-0"	1 3/4"	3	PT	WD	1	--	D	PT	HM	--	CLS-OS2	No	No	Yes	
010	ALL GENDER	3'-0"	7'-0"	1 3/4"	1	PT	HM	--	--	D	PT	HM	--	AG-RR	No	No	Yes	
011	THERAPY/OFFICE	3'-0"	7'-0"	1 3/4"	4	PT	HM	2	--	B	PT	HM	2	LV-EXT	No	No	Yes	
011A	THERAPY/OFFICE	3'-0"	7'-0"	1 3/4"	4	PT	WD	3	45 MIN	B	PT	HM	3	CLS-IS	Yes	No	Yes	
012	THERAPY/OFFICE	3'-0"	7'-0"	1 3/4"	4	PT	HM	2	--	B	PT	HM	2	LV-EXT	No	No	Yes	
012B	THERAPY/OFFICE	12'-0"	9'-4"	1 3/4"	8	--	GLASS	1	--	H	--	ALUM	--	FLD1	Yes	No	No	BLOCK OUT SLAB AS REQ'D FOR FLUSH SILL
013	ELECTRICAL	3'-0"	7'-0"	1 3/4"	2	PT	HM	--	--	D	PT	HM	--	ED1	No	Yes	Yes	
014	GIRLS	3'-0"	7'-0"	1 3/4"	1	PT	HM	--	--	D	PT	HM	--	RR-1	No	No	Yes	
015	BOYS	3'-0"	7'-0"	1 3/4"	1	PT	HM	--	--	D	PT	HM	--	RR-1	No	No	Yes	
016	ALL GENDER	3'-0"	7'-0"	1 3/4"	1	PT	HM	--	--	D	PT	HM	--	AG-RR	No	No	Yes	
018	STORAGE	6'-0"	7'-0"	1 3/4"	2	PT	HM	--	--	G	PT	HM	--	LV-EXT-PR	No	No	Yes	PROVIDE REMOVABLE MULLION
019	COLLABORATION	6'-0"	7'-2"	1 3/4"	4	PT	HM	2		F	PT	HM	2	. LV-EXT-PR1	Yes	No	Yes	PROVIDE REMOVABLE MULLION
019A	COLLABORATION	3'-0"	7'-0"	1 3/4"	4	PT	HM	2	--	A	PT	HM	2	CLS-OS1	Yes	No	Yes	
020	EXTERIOR CORRIDOR	6'-0"	7'-0"	1 3/4"	4	PT	HM	2		G	PT	HM	--	HM-ED-OS	Yes	Yes	No	PROVIDE REMOVABLE MULLION
020A	EXTERIOR CORRIDOR	3'-0"	7'-0"	1 3/4"	4	PT	HM	2	--	D	PT	HM	--	ED2	Yes	Yes	No	
020B	EXTERIOR CORRIDOR	6'-0"	7'-0"	1 3/4"	4	PT	HM	2		G	PT	HM	--	HM-ED-OS	Yes	Yes	No	PROVIDE REMOVABLE MULLION
21	ELECTRICAL	6'-0"	7'-0"	1 3/4"	2	PT	HM	--	--	D	PT	HM	--	LV-EXT-PR	No	No	Yes	
22	FIRE RISER	3'-0"	7'-0"	1 3/4"	2	PT	HM	--	--	D	PT	HM	--	FR1	No	No	Yes	

1. FOR HARDWARE SETS, SEE SPECIFICATIONS SECTION 08 71 00
2. ALL EXIT DOORS SHALL BE OPERABLE FROM THE INSIDE WITHOUT ANY SPECIAL EFFORT OR KNOWLEDGE.
3. ALL GLAZING IN THE OPERABLE PORTION OF DOORS SHALL BE TEMPERED
4. PROVIDE TYPE "X" GYP. BOARD FOR 1-HR WALLS, SEE FLOOR PLAN FOR LOCATION OF RATED WALLS
5. CONTRACTOR TO COORDINATE PLYWOOD SHEAR AND ADJUST WALL TYPE AND FRAME PROFILE SIZES AS REQUIRED
6. PROVIDE FUSIBLE LINK FIRE DAMPERS AT LOUVERS IN FIRE RATED DOORS. (WHERE OCCURS)
8. WHERE FLOOR STOPS OR FLOOR MOUNTED HOLD OPENS ARE SPECIFIED THEY SHALL BE LOCATED NO FURHTER THAN 4" FROM A WALL
8. REFER TO TITLE 24, CHAPTER 24, SECTION 2406, SAFETY GLAZING, OF THE CBC FOR REQUIREMENTS
9. SEE MECHANICAL DRAWINGS FOR SIZE OF LOUVERS AND UNDERCUTS
10. CURTAIN WALL SYSTEM PER DEFFERED APPROVAL
11. FIRE RATED DOORS AND FRAMES SHALL BE INSTALLED IN ACCORDANCE WITH NFPA #80, THEIR LISTINGS, AND MANUFACTUER'S RECOMMENDATIONS.

DOOR AND WINDOW GENERAL NOTES

1. INTERIOR GLAZING: 1/4" TINTED FLOAT GLASS, PER SPECIFICATION
2. EXTERIOR GLAZING: 1" DOUBLE PANE GLASS TINTED, PER SPECIFICATIONS
3. FIRE RATED GLAZING, PER SPECIFICATIONS

(T) TEMPERED GLASS

GLAZING NOTES

WINDOW SCHEDULE

OPEINING NO.	FIRE RATING	FRAME ELEVATION	FRAME MATERIAL	GLAZING TYPE	WINDOW SHADES
19	--	B	HM	2	Yes
19	--	B	HM	2	Yes
19	--	B	HM	2	Yes
19	--	B	HM	2	Yes
19	--	B	HM	2	Yes
19	--	B	HM	2	Yes
19	--	B	HM	2	Yes
19	--	B	HM	2	Yes
19	--	B	HM	2	Yes
19	--	B	HM	2	Yes
19	--	B	HM	2	Yes
19	--	B	HM	2	Yes
19	--	B	HM	2	Yes
20	--	A	HM	2	Yes
20	--	A	HM	2	Yes
20	--	A	HM	2	Yes
20	--	A	HM	2	Yes
20	--	A	HM	2	Yes
20	--	A	HM	2	Yes
20	--	A	HM	2	Yes
28	--	C	HM	2	Yes
28	--	C	HM	2	Yes
28	--	C	HM	2	Yes
28	--	C	HM	2	Yes
28	--	C	HM	2	Yes
28	--	C	HM	2	Yes
28	--	C	HM	2	Yes
28	--	C	HM	2	Yes
28	--	C	HM	2	Yes
28	--	C	HM	2	Yes
28	--	C	HM	2	Yes
28	--	C	HM	2	Yes
28	--	C	HM	2	Yes

DOOR SCHEDULE

WINDOW SCHEDULE

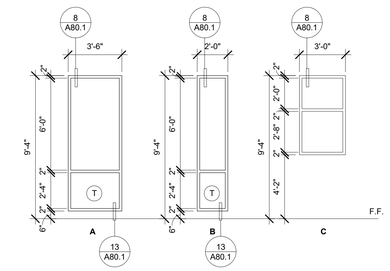

WINDOW FRAME ELEVATIONS

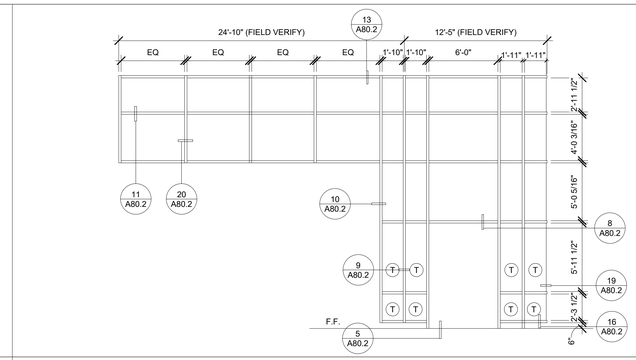

CURTAIN WALL ELEVATION- WEST

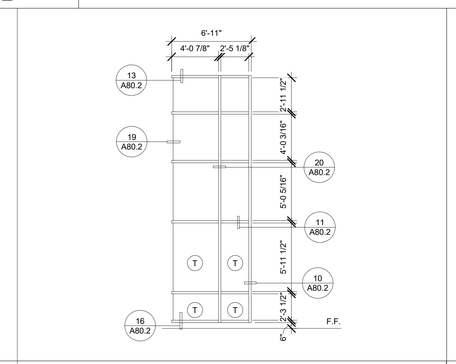

CURTAIN WALL ELEVATION- SOUTH

GATE SCHEDULE

GATE NO.	WIDTH	HEIGHT	MATERIAL	PANIC HARDWARE	HARDWARE GROUP	DETAIL REF.
G01	25'-0"	7'-6"	DM	No	G.01	8/A10.3
G02	8'-0"	7'-6"	DM	Yes	G.02	1/A10.3
G03	3'-0"	6'-0"	DM	Yes	G.03	5/A10.2
G04	6'-0"	6'-0"	DM	Yes	G.02	1/A10.3
G05	3'-0"	6'-0"	DM	Yes	G.03	5/A10.2
G06	6'-0"	7'-6"	DM	Yes	G.02	1/A10.3
G07	6'-0"	7'-6"	DM	Yes	G.02	1/A10.3
G08	6'-0"	8'-0"	CHL	Yes	G.02	10/A10.4
G09	3'-0"	8'-0"	CHL	Yes	G.03	10/A10.4 SIM
G10	6'-0"	8'-0"	CHL	No	G.05	3/A10.2
G11	6'-0"	8'-0"	DM	No	G0.6	9/A10.3
G12	6'-0"	8'-0"	DM	No	G0.6	9/A10.3

GATE SCHEDULE

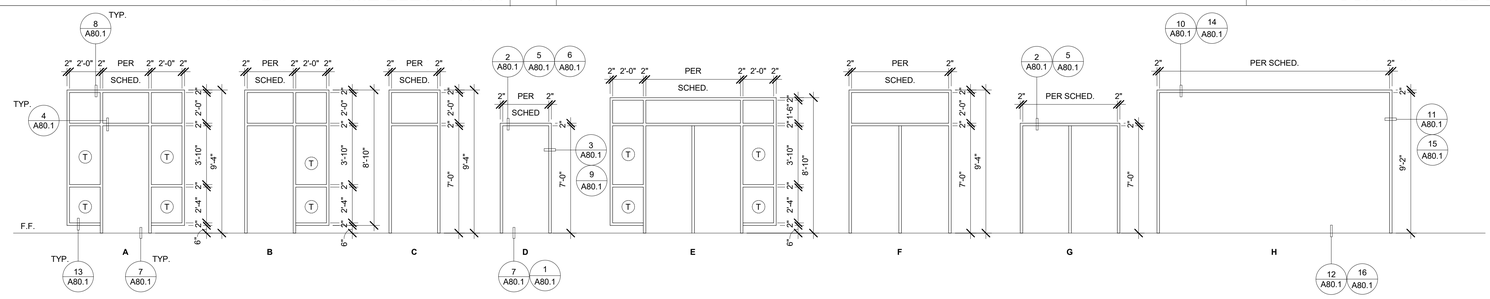

DOOR FRAME ELEVATIONS

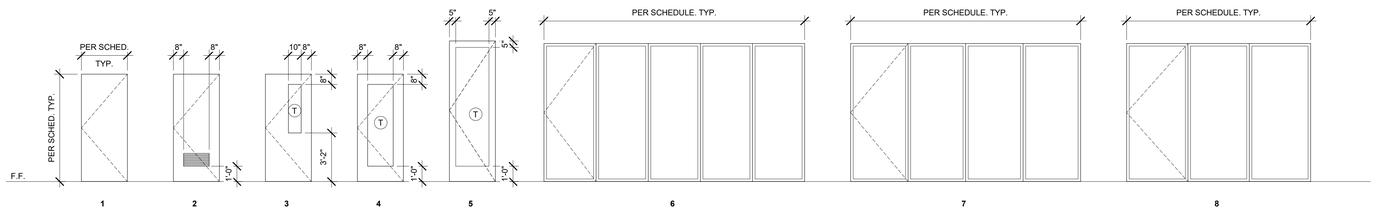

DOOR TYPES

studiowc
ARCHITECTURE + ENGINEERING
515 Encinitas Blvd, Ste 201 Encinitas, California 92024
Telephone: (760) 634-8880 Fax: (760) 452-7041

IDENTIFICATION STAMP
DIV. OF THE STATE ARCHITECT
APP. 04-118693 INC:
REVIEWED FOR
SS ☑ FLS ☑ ACS ☑
DATE: 03.13.2020

LICENSED ARCHITECT
ROBERT D. WEBB
R D W
C-28036
OCTOBER 31, 2020
STATE OF CALIFORNIA

Revision | Date

Consultant

Engineer

CHET F. HARRITT ELEM. SCHOOL
LRC & CLASSROOM ADDITION
SANTEE SCHOOL DISTRICT

DOOR & OPENING SCHEDULES

Drawn: Author
Checked: Checker
Date: OCTOBER 18, 2019
Job: SSD-CFH-05

A8.1

FINISH SCHEDULE

ROOM NO.	ROOM NAME	FLOOR			WALL						CEILING				NOTES
		FLOOR FINISH	FLOOR FINISH B	BASE FINISH	ALL OR NORTH WALL FINISH	EAST WALL FINISH	SOUTH WALL FINISH	WEST WALL FINISH	WAINSCOT MATERIAL	WAINSCOT HEIGHT	CEILING MATERIAL	CEILING FINISH	CEILING MATERIAL B	CEILING FINISH B	
1	SPED CLASSROOM	CPT	RES	RB	PT				TWP	8'-0"	ACT	--			
2	SCIENCE CLASSROOM	RES	--	RB	PT				TWP	8'-0"	ACT	--			
3	SCIENCE CLASSROOM	RES	--	RB	PT				TWP	8'-0"	ACT	--			
4	CLASSROOM	CPT	RES	RB	PT				TWP	8'-0"	ACT	--			
5	SPED CLASSROOM	CPT	RES	RB	PT				TWP	8'-0"	ACT	--			
6	CLASSROOM	CPT	RES	RB	PT				TWP	8'-0"	ACT	--			
7	OT/PT CLASSROOM	RES	--	RB	PT				TWP	8'-0"	ACT	--			
8	LIBRARY	CPT	--	RB	PT				TWP	8'-0"	GB	PT	ACT	--	FLOATING ACT CLOUDS
9	BOOK ROOM	RES	--	RB	PT				--		ACT	--			
10	ALL GENDER	CT	--	CT	PT				CT	7'-0"	GB	PT			
11	THERAPY/OFFICE	CPT	--	RB	PT				TWP	8'-0"	ACT	--			
12	THERAPY/OFFICE	CPT	--	RB	PT				TWP	8'-0"	ACT	--			
13	ELECTRICAL	SC	--	--	PT				--		ACT	--			
14	GIRLS	CT	--	CTB	PT				CT	7'-0"	GB	PT			
15	BOYS	CT	--	CTB	PT				CT	7'-0"	GB	PT			
16	ALL GENDER	CT	--	CTB	PT				CT	7'-0"	GB	PT			
17	WORKROOM	RES	--	RB	PT				CT	7'-0"	ACT	--			
18	STORAGE	SC	--	RB	PT				FRP	7'-0"	GB	PT			
19	COLLABORATION	CPT	--	RB	PT				TWP	8'-0"	ACT	--			2X2 ACT SYSTEM
21	ELECTRICAL	SC	--	--	PT				--		GB	PT			
22	FIRE RISER	SC	--	--	PT				--						

ROOM FINISH SCHEDULE

FINISH ABBREVIATIONS:

ACT	ACOUSTIC CEILING TILE 2X4
CPT	CARPET
CT	CERAMIC TILE THINSET APPLICATION OVER CEMENTITIOUS TILE BACKER BOARD
CTB	CERAMIC TILE BASE
RB	RUBBER BASE
FRP	FIBERGLASS REINFORCED PLASTIC
GB	GYPSUM WALLBOARD
PT	PAINT
RES	RESILIENT FLOORING
SC	SEALED CONCRETE
TWP	TACKABLE WALL PANEL
VWC	VINYL WALL COVERING

FINISH ABBREVIATIONS

FINISH NOTES:

1. ALL FINISHES SHALL COMPLY WITH C.B.C., C.F.C. AND TITLE 19 C.C.R. AND SHALL HAVE A FLAME SPREAD RATING NOT TO EXCEED 25 AND A SMOKE DENSITY NOT TO EXCEED 450
2. CEILING HEIGHTS RELATIVE TO FINISH FLOOR ELEVATION
3. SEE SPEC. SECTION 09500 FOR ACOUSTICAL CEILING TILE. (TYPE ACT-1)
4. ALL GYB. BD. SOFFITS TO RECEIVE SOME FINISH AS WALL (S) ON VERTICAL SURFACE AND PAINT ON HORIZONTAL SURFACE, UNLESS NOTED OTHERWISE.
5. GWX, & VWP, VWC OR TEXTURE/ PAINT FINISH SHALL CONTINUE BEHIND CASEWORK AT WALLS WHERE OCCURS. (TYP.)
6. REFERENCE INTERIOR ELEVATIONS WHERE MULTIPLE WALL FINISHES ARE NOTED
7. PROVIDE CARPET UNDERNEATH ALL WORKSTATIONS

FINISH SCHEDULE

IDENTIFICATION STAMP
DIV. OF THE STATE ARCHITECT
APP. 04-118693 INC:
REVIEWED FOR
SS ☑ FLS ☑ ACS ☑
DATE: 03.13.2020

Revision | Date

Consultant

Engineer

studiowc
ARCHITECTURE + ENGINEERING
515 Encinitas Blvd, Ste. 201, Encinitas, California 92024
Telephone: (760) 634-8880 Fax: (760) 452-7541

LICENSED ARCHITECT
ROBERT D. WEBB
C-28036
STATE OF CALIFORNIA
EXPIRATION 31, 2021

CHET F. HARRITT ELEM. SCHOOL
LRC & CLASSROOM ADDITION
SANTEE SCHOOL DISTRICT

ROOM FINISHES

Drawn: Author
Checked: Checker
Date: OCTOBER 18, 2019
Job: SSD-CFH-05

A9.1

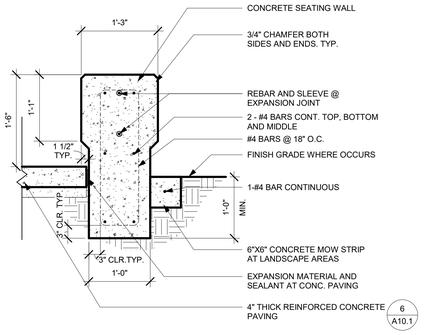

BENCH WALL | 1" = 1'-0" | 1

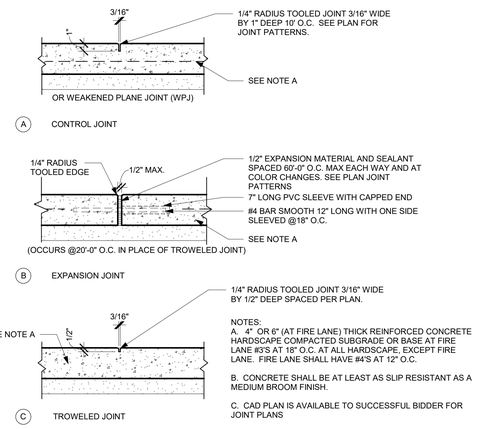

CONCRETE JOINTS | 1 1/2" = 1'-0" | 2

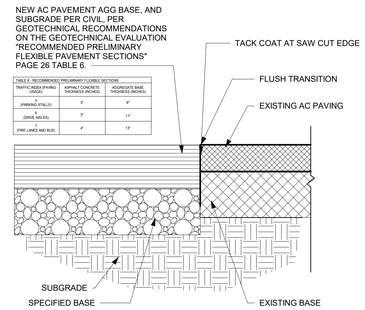

AC PAVING NEW TO EXIST | 1 1/2" = 1'-0" | 3

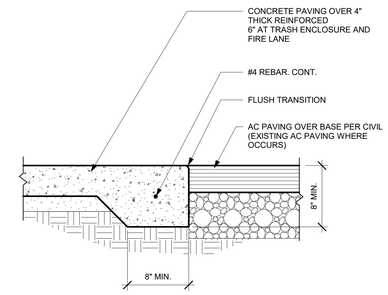

PAVING TRANSITION- CONCRETE TO ASPHALT | 1 1/2" = 1'-0" | 4

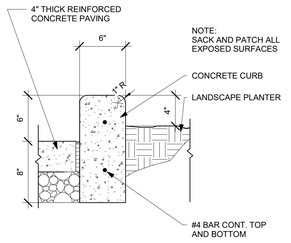

CONC CURB AT DROP | 1 1/2" = 1'-0" | 5

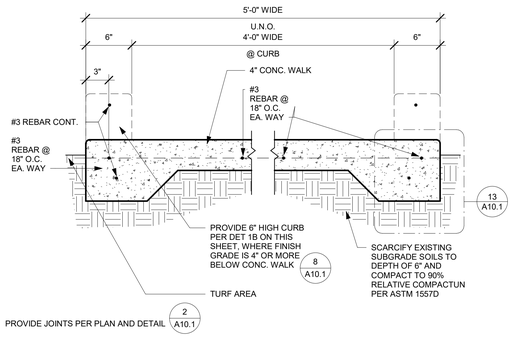

CONC. ACCESSIBLE WALK | 1 1/2" = 1'-0" | 6

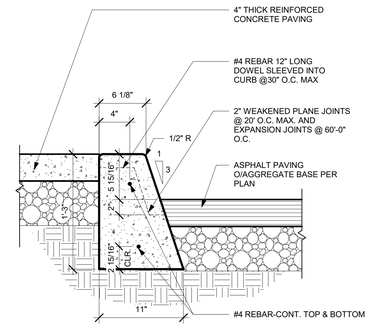

CONCRETE CURB | 1 1/2" = 1'-0" | 7

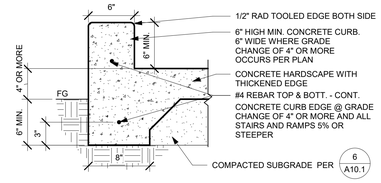

CONCRETE CURB EDGE | 1 1/2" = 1'-0" | 8

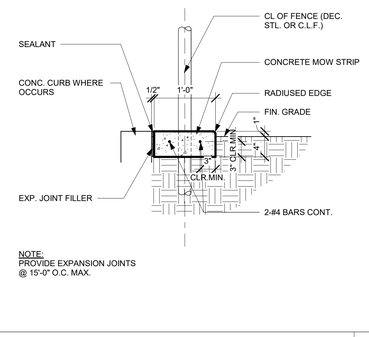

CONCRETE MOW STRIP | 1" = 1'-0" | 9

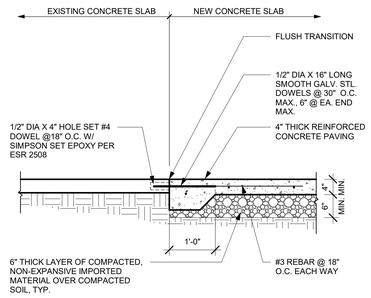

CONC. NEW TO EXIST. | 3/4" = 1'-0" | 10

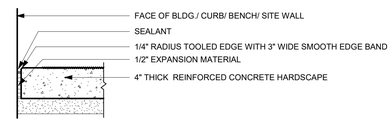

CONC. PAVING DETAILS TO BLDG & BENCH | 1 1/2" = 1'-0" | 11

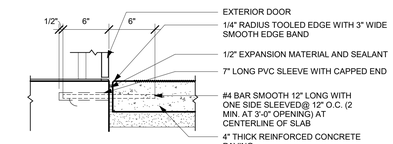

CONCRETE PAVING DETAILS 1 | 1 1/2" = 1'-0" | 12

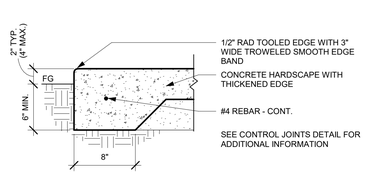

TYP. CONCRETE EDGE | 1 1/2" = 1'-0" | 13

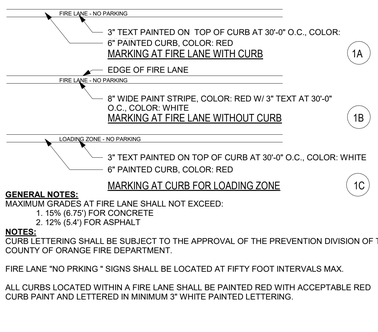

FIRE LANE CURB MARKINGS | 1/4" = 1'-0" | 14

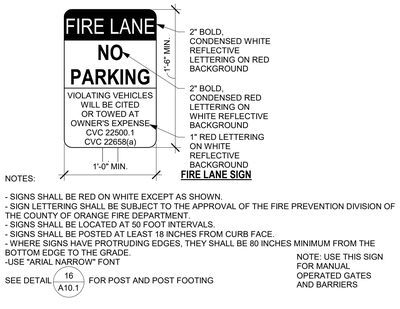

FIRE LANE SIGN | 1 1/2" = 1'-0" | 15

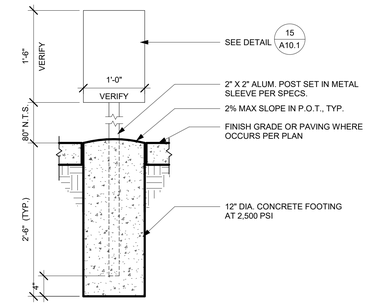

FIRE SIGN POST | 1" = 1'-0" | 16

IDENTIFICATION STAMP
DIV. OF THE STATE ARCHITECT
APP. 04-118693 INC:
REVIEWED FOR
SS ☑ FLS ☑ ACS ☑
DATE: 03.13.2020

Revison	Date

Consultant

Engineer

studiowc
ARCHITECTURE + ENGINEERING
515 Encinitas Blvd, Ste. 201, Encinitas, California 92024
Telephone: (760) 452-8880 Fax: (760) 452-7541

LICENSED ARCHITECT
ROBERT D. WEBB
R.D.Webb
C-28036
OCTOBER 31, 2020
STATE OF CALIFORNIA

CHET F. HARRITT ELEM. SCHOOL
LRC & CLASSROOM ADDITION
SANTEE SCHOOL DISTRICT

SITE DETAILS

Drawn: Author
Checked: Checker
Date: OCTOBER 18, 2019
Job: SSD-CFH-05

A10.1

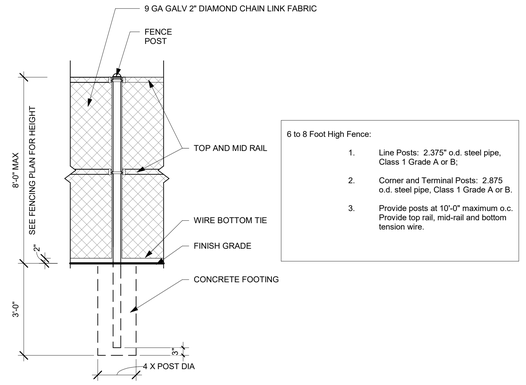

6 to 8 Foot High Fence:

1. Line Posts: 2.375" o.d. steel pipe, Class 1 Grade A or B;
2. Corner and Terminal Posts: 2.875 o.d. steel pipe, Class 1 Grade A or B.
3. Provide posts at 10'-0" maximum o.c. Provide top rail, mid-rail and bottom tension wire.

ELEVATION - CHAINLINK | 1/2" = 1'-0" | 1

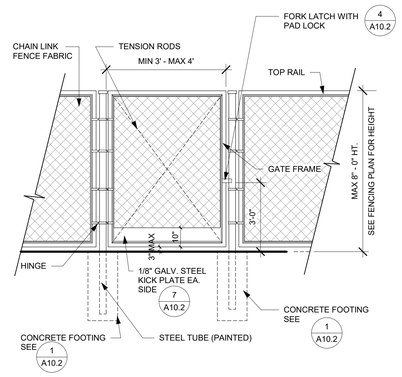

C.L. SINGLE GATE | 3/8" = 1'-0" | 2

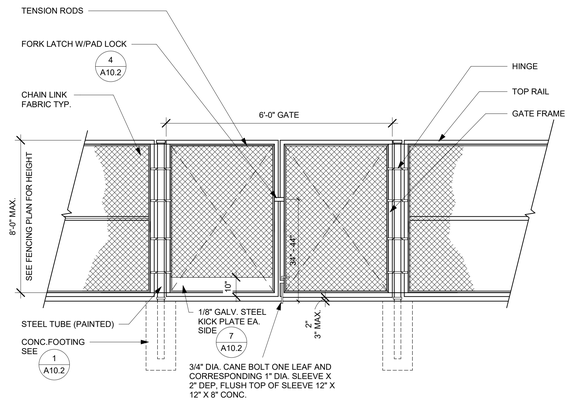

DOUBLE GATE AT CHAIN LINK FENCE | 3/8" = 1'-0" | 3

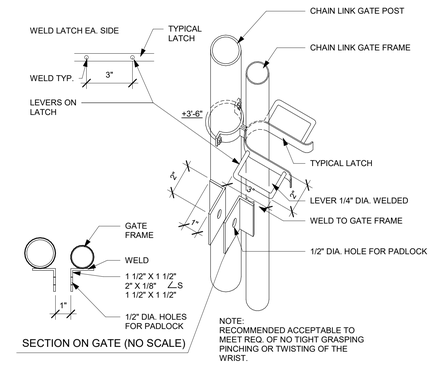

SECTION ON GATE (NO SCALE)

C.L.GATE LATCH | 3" = 1'-0" | 4

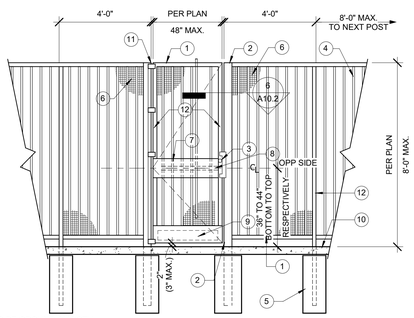

NOTE:

- ALL WELDS TO BE GROUND SMOOTH
-ALL STELL PARTS TO BE HOT DIP GALVANIZED AFTER EACH FABRICATION
- ALL PARTS TO BE WELDED TOGETHER WITH 3/16" FILLET WELDS ALL AROUND, UNLESS OTHERWISE NOTED, TYPICAL
- AREAS WHERE GALVANIZING IS REMOVED DURING CONSTRUCTION SHALL BE TREATED W/ GALVANIC PAINT BLENDED INTO APPEARANCE
- MANUAL CANE BOLTS OR MANUALLY LOCKING HARDWARE OR CHAINS SHALL NOT BE PERMITTED ON GATES WITH PANIC HARDWARE

1. 2" x 2" x 1/8" STEEL TUBE
2. 4" x 4" x 1/4" STEEL TUBE
3. HARDWARE @ GATE
4. 1" x 1" x 0.60" STEEL TUBE PICKETS @ 5" O.C. WITH 3.75" MAX. CLEAR BETWEEN PICKETS
5. CONC. FTG., SEE DETAIL 3 A10.3
6. 1" x 1" x 14 GA. GALV. WELDED WIRE SCREEN WITH EDGE BAND WELDED TO FRAME AND PICKETS. PROVIDE A MIN. OF 3'-0" ON EACH SIDE OF GATE AND TERMINATE INTO FENCE POST. METHOD OF GALV. APPLICATION ON PERF. SHEET METAL SHALL ASSURE THAT ALL PERF. HOLES REMAIN OPEN & FREE OF EXCESS GALV.
7. 1/8" STEEL PLATE, WELDED TO GATE FRAME. SEE DETAIL
8. PANIC BAR HARDWARE
9. 10" HIGH KICKPLATE- 1/8" GV ST PL. EA. SIDE SCREWED TO GATE FRAME. SCREWS TO BE FLUSH WITH KICK PLATE. SEE DETAIL 7 A10.2
10. CONC. PAVING (CONC. MOW STRIP @ LANDSCAPING)
11. CONT. HEAVY DUTY SPRING LOADED HINGE WELDED TO POST FRAME
12. 2" x 2" x 1/4" STEEL TUBE

DECORATIVE SINGLE GATE W/PANIC HARDWARE | 3/8" = 1'-0" | 5

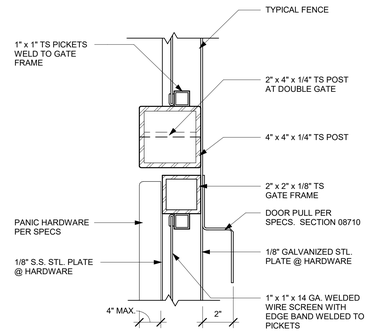

GATE MULLION | 3" = 1'-0" | 6

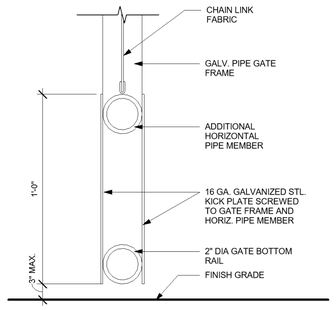

CL KICKPLATE DETAIL | 3" = 1'-0" | 7

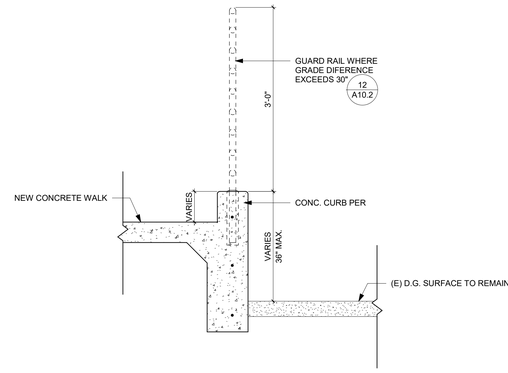

CONCRETE WALK AT SITE WALL | 1" = 1'-0" | 8

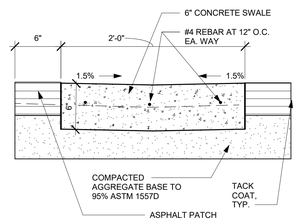

SITE - CONCRETE SWALE 2' | 1 1/2" = 1'-0" | 9

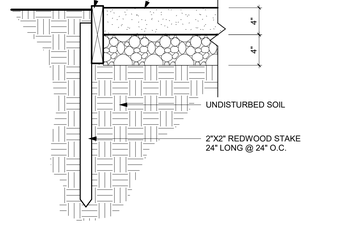

PAVING - REDWOOD HEADER @ DG | 1 1/2" = 1'-0" | 10

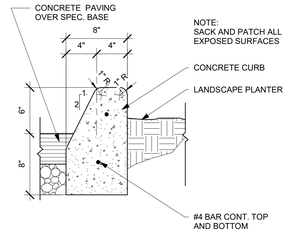

CONC CURB / LANDSCAPE | 1 1/2" = 1'-0" | 11

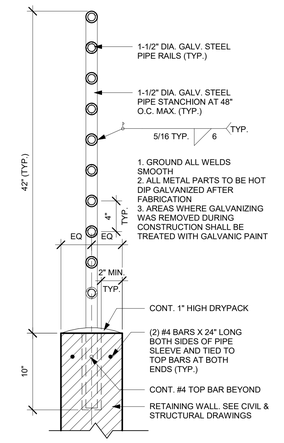

GUARDRAIL @ RETAINING WALL | 1 1/2" = 1'-0" | 12

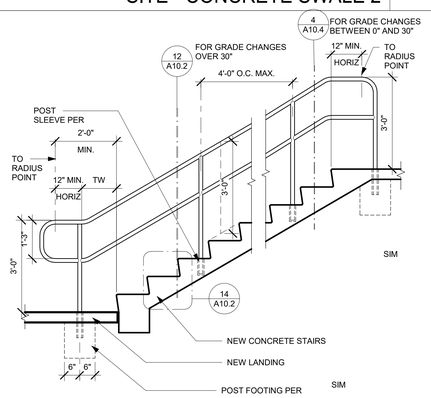

CONCRETE STAIRS | 1/2" = 1'-0" | 13

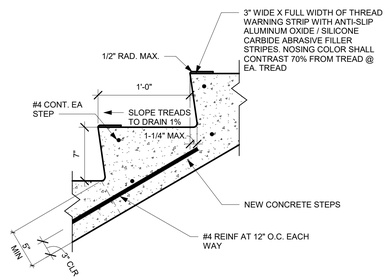

CONCRETE STEPS | 1 1/2" = 1'-0" | 14

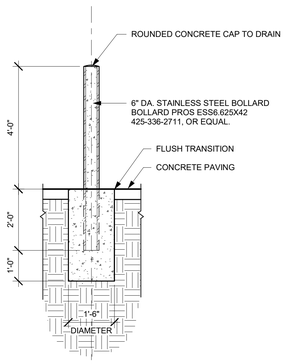

BOLLARD | 1/2" = 1'-0" | 15

IDENTIFICATION STAMP
DIV. OF THE STATE ARCHITECT
APP. 04-118693 INC:
REVIEWED FOR
SS ☑ FLS ☑ ACS ☑
DATE: 03.13.2020

Revison	Date

Consultant

Engineer

studiowc
ARCHITECTURE + ENGINEERING
515 Encinitas Blvd, Ste. 201, Encinitas, California 92024
Telephone: (760) 634-8880 Fax: (760) 452-7341

LICENSED ARCHITECT
ROBERT D. WEBB
R.D.W.
C-28036
EXPIRATION 31, 2021
STATE OF CALIFORNIA

CHET F. HARRITT ELEM. SCHOOL
LRC & CLASSROOM ADDITION
SANTEE SCHOOL DISTRICT

SITE DETAILS

Drawn: Author
Checked: Checker
Date: OCTOBER 18, 2019
Job: SSD-CFH-05

A10.2

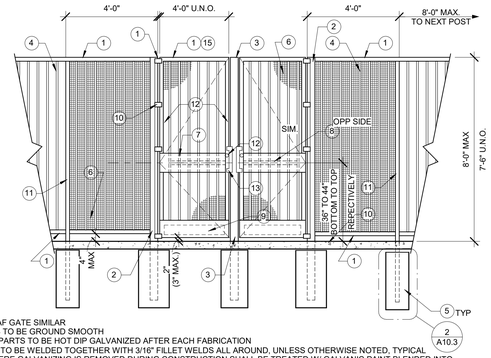

NOTE:
- SINGLE LEAF GATE SIMILAR
- ALL WELDS TO BE GROUND SMOOTH
- ALL STELL PARTS TO BE HOT DIP GALVANIZED AFTER EACH FABRICATION
- ALL PARTS TO BE WELDED TOGETHER WITH 3/16" FILLET WELDS ALL AROUND, UNLESS OTHERWISE NOTED, TYPICAL
- AREAS WHERE GALVANIZING IS REMOVED DURING CONSTRUCTION SHALL BE TREATED W/ GALVANIC PAINT BLENDED INTO APPEARANCE
- FIELD PAINT FENCE.. TREAT GALVANIZING WITH ETCHING PROCESS AS RECOMMENDED BY PAINTING MANUFACTURER.
- MANUAL CANE BOLTS OR MANUALLY LOCKING HARDWARE OR CHAINS SHALL NOT BE PERMITTED ON GATES WITH PANIC HARDWARE

1. 2" x 2" x 1/8" STEEL TUBE
2. 4" x 4" x 1/4" STEEL TUBE
3. 2" x 4" x 1/4" STEEL TUBE
4. 1" x 1" x .060" STEEL TUBE PICKETS 5" OC WITH 4" MAX CLEAR BETWEEN PICKETS
5. CONC. FTG PER DETAIL
6. 1" x 1" x 14GA GALV WELDED WIRE SCREEN WITH EDGE BAND TACK WELDED AT 4" O.C. TO FRAME AND PICKETS. PROVIDE A MIN. OF 4'-0" ON EACH SIDE OF GATE AND TERMINATE INTO FENCE POST METHOD OF GALV. APPLICATION ON PERF. SHEET METAL SHALL ASSURE THAT ALL PERF. HOLES REMINA OPEN ADN FREE OF EXCESS GALV. MATL.
7. 1/8" STEEL PLATE, WELDED TO GATE FRAME SEE
8. PANIC BAR HARDWARE
9. 10" HIGH KICKPLATE - 1/8" SS PL. EA SIDE SCREWED TO GATE FRAME, SCREWS TO BE FLUSH WITH KICKPLATE. SEE DETAIL (5 A10.3)
10. CONC. HEAVY DUTY SPRING LOADED HINGE WELDED TO POST FRAME
11. 2" x 2" x 1/8" STEEL TUBE
12. DOOR PULL AND STOP PER HARDWARE SCHEDULE, SEE GATE SCHEDULE A8.1
13. FIXED DOOR LEVER W/ LOCK EA SIDE
14. PIPE SLEEVE
15. CLOSER (OPP. SIDE) EXTERIOR GRADE, TYP. EACH GATE LEAF

DECORATIVE DBL GATE W/PANIC HARDWARE | 3/8" = 1'-0" | 1

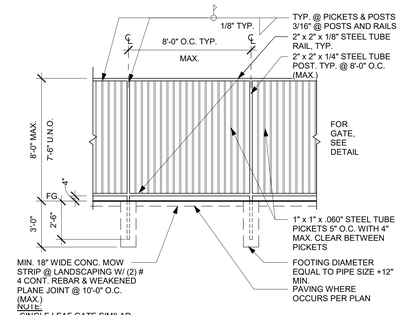

NOTE:
-SINGLE LEAF GATE SIMILAR
-ALL WELDS TO BE GROUND SMOOTH
-ALL STEEL TO BE HOT DIP GALVANIZED AFTER FABRICATION
-ALL PARTS TO BE WELDED TOGETHER WITH 3/16" FILLET WELDS ALL AROUND, UNLESS OTHERWISE NOTED. TYP.
-AREAS WHERE GALVANIZING IS REMOVED DURING CONSTRUCTION SHALL BE TREATED WITH GALVANIC PAINT BLENDED INTO APPEARANCE

ELEVATION - DECORATIVE | 1/4" = 1'-0" | 2

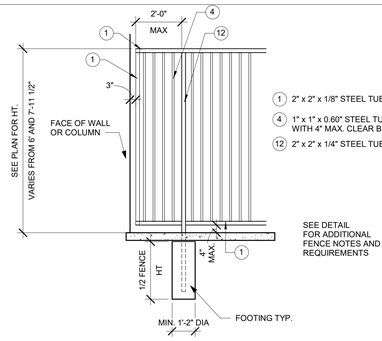

1. 2" x 2" x 1/8" STEEL TUBE
4. 1" x 1" x 0.60" STEEL TUBE PICKETS @ 5" O.C. WITH 4" MAX. CLEAR BETWEEN PICKETS
12. 2" x 2" x 1/4" STEEL TUBE

NOTE:
- ALL WELDS TO BE GROUND SMOOTH
-ALL STEEL PARTS TO BE HOT DIP GALVANIZED AFTER EACH FABRICATION
- ALL PARTS TO BE WELDED TOGETHER WITH 3/16" FILLET WELDS ALL AROUND, UNLESS OTHERWISE NOTED, TYPICAL
- AREAS WHERE GALVANIZING IS REMOVED DURING CONSTRUCTION SHALL BE TREATED W/ GALVANIC PAINT BLENDED INTO APPEARANCE

FENCE AT BUILDING COLUMN | 3/8" = 1'-0" | 3

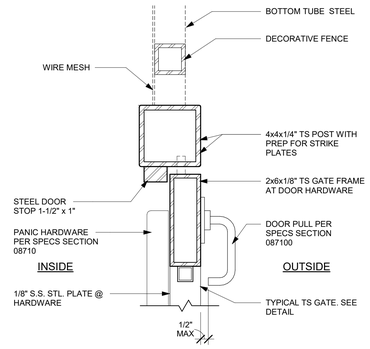

GATE POST | 3" = 1'-0" | 4

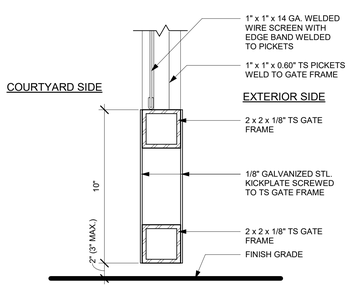

KICKPLATE DETAIL | 3" = 1'-0" | 5

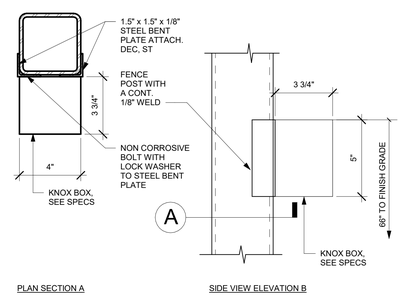

KNOX BOX | 3" = 1'-0" | 6

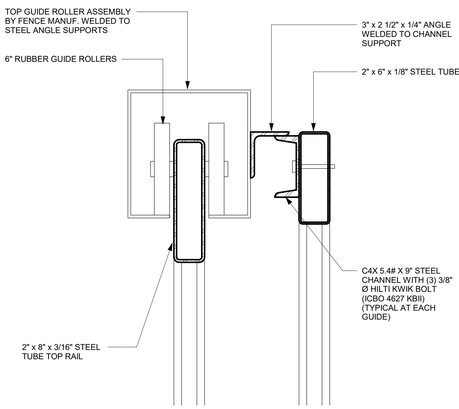

ROLLING GATE HEADER | 3" = 1'-0" | 7

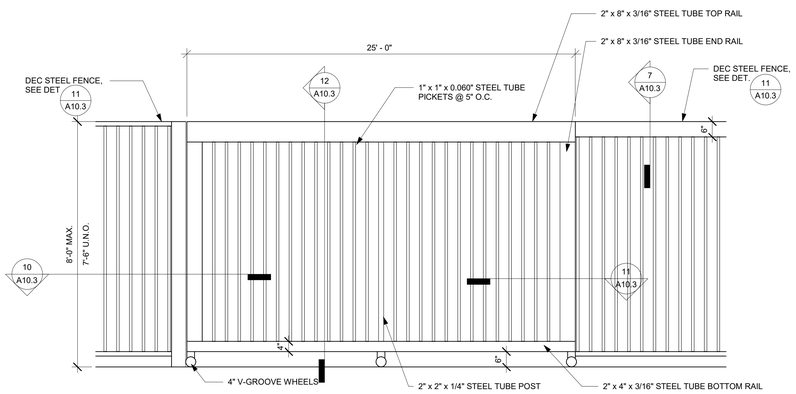

ROLLING GATE ELEVATION FROM INSIDE ENCLOSURE | 1/2" = 1'-0" | 8

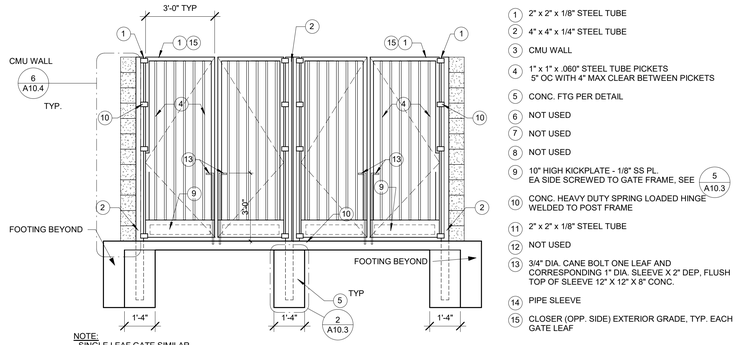

1. 2" x 2" x 1/8" STEEL TUBE
2. 4" x 4" x 1/4" STEEL TUBE
3. CMU WALL
4. 1" x 1" x .060" STEEL TUBE PICKETS 5" OC WITH 4" MAX CLEAR BETWEEN PICKETS
5. CONC. FTG PER DETAIL
6. NOT USED
7. NOT USED
8. NOT USED
9. 10" HIGH KICKPLATE - 1/8" SS PL. EA SIDE SCREWED TO GATE FRAME, SEE (5 A10.3)
10. CONC. HEAVY DUTY SPRING LOADED HINGE WELDED TO POST FRAME
11. 2" x 2" x 1/8" STEEL TUBE
12. NOT USED
13. 3/4" DIA. CANE BOLT ONE LEAF AND CORRESPONDING 1" DIA. SLEEVE X 2" DEP, FLUSH TOP OF SLEEVE 12" X 12" X 8" CONC.
14. PIPE SLEEVE
15. CLOSER (OPP. SIDE) EXTERIOR GRADE, TYP. EACH GATE LEAF

NOTE:
- SINGLE LEAF GATE SIMILAR
- ALL WELDS TO BE GROUND SMOOTH
- ALL STELL PARTS TO BE HOT DIP GALVANIZED AFTER EACH FABRICATION
- ALL PARTS TO BE WELDED TOGETHER WITH 3/16" FILLET WELDS ALL AROUND, UNLESS OTHERWISE NOTED, TYPICAL
- AREAS WHERE GALVANIZING IS REMOVED DURING CONSTRUCTION SHALL BE TREATED W/ GALVANIC PAINT BLENDED INTO APPEARANCE
- FIELD PAINT FENCE. TREAT GALVANIZING WITH ETCHING PROCESS AS RECOMMENDED BY PAINTING MANUFACTURER.

DECORATIVE DBL GATE AT TRASH ENCLOUSURE | 3/8" = 1'-0" | 9

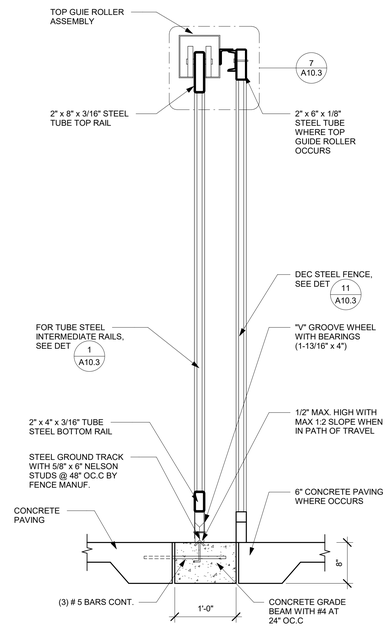

ROLLING GATE SECTION | 1" = 1'-0" | 12

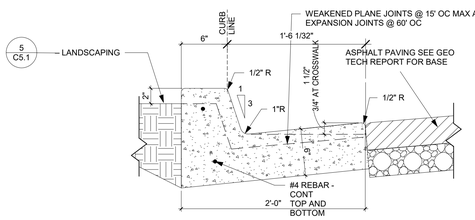

CURB AND GUTTER | 1 1/2" = 1'-0" | A

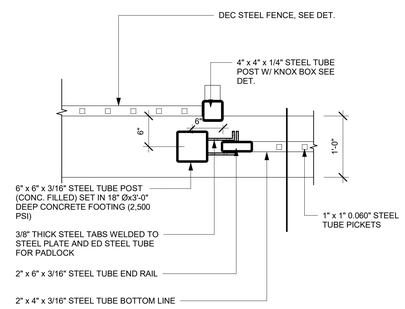

ROLLING GATE JAMB | 1" = 1'-0" | 10

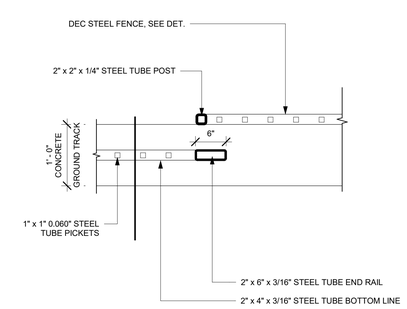

ROLLING GATE JAMB | 1" = 1'-0" | 11

IDENTIFICATION STAMP
DIV. OF THE STATE ARCHITECT
APP. 04-118693 INC:
REVIEWED FOR
SS ☑ FLS ☑ ACS ☑
DATE: 03.13.2020

Revison | Date
Consultant
Engineer

studiowc
ARCHITECTURE + ENGINEERING
515 Encinitas Blvd, Ste. 201, Encinitas, California 92024
Telephone: (760) 452-8880 Fax: (760) 452-7541

LICENSED ARCHITECT ROBERT D. WEBB
C-28036
OCTOBER 31, 2020
STATE OF CALIFORNIA

CHET F. HARRITT ELEM. SCHOOL
LRC & CLASSROOM ADDITION
SANTEE SCHOOL DISTRICT

SITE DETAILS

Drawn: Author
Checked: Checker
Date: OCTOBER 18, 2019
Job: SSD-CFH-05

A10.3

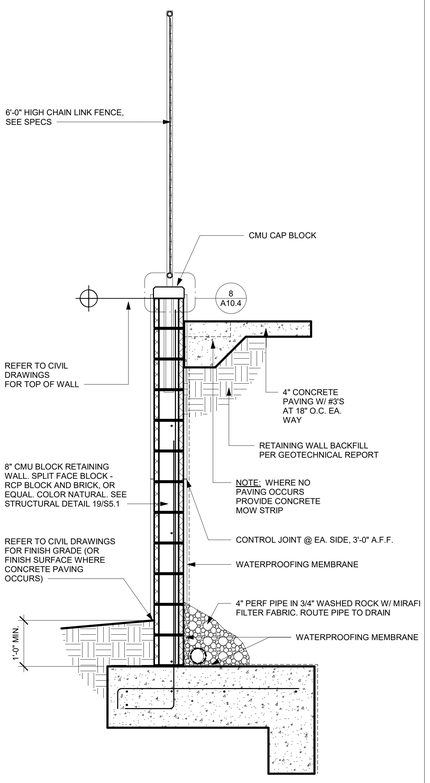

RETAINING WALL WITH CLF | 3/4" = 1'-0" | 1

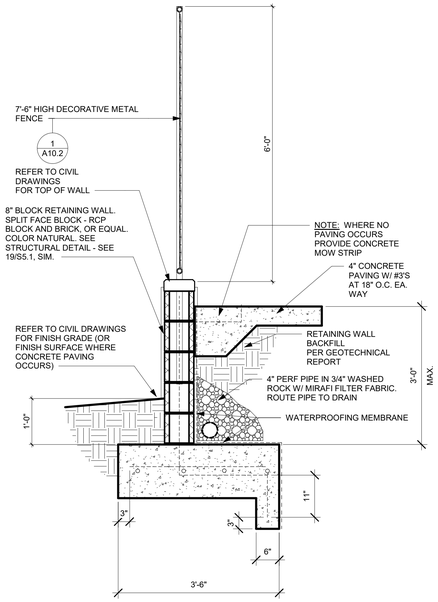

RETAINING WALL WITH CLF | 3/4" = 1'-0" | 2

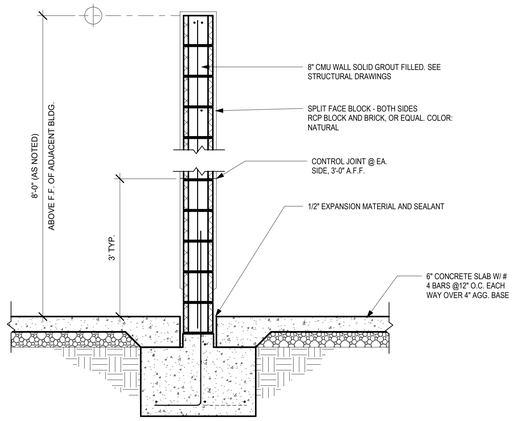

SITE WALL | 3/4" = 1'-0" | 3

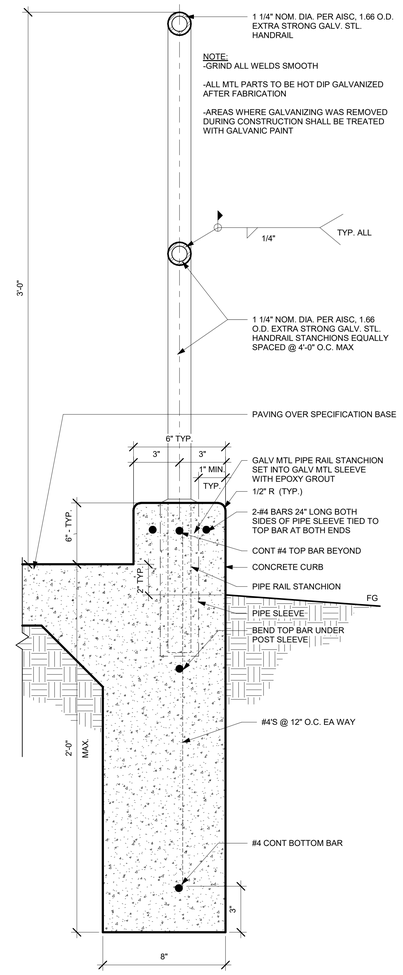

CURB @ HANDRAIL1 | 3" = 1'-0" | 4

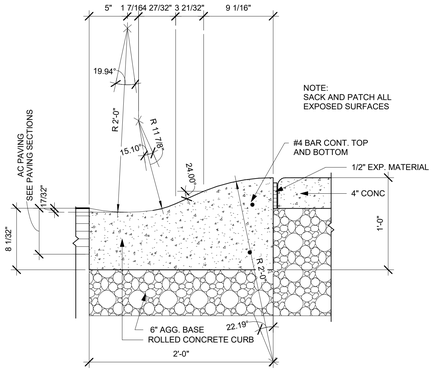

ROLLED CURB AT FIRE LANE | 1 1/2" = 1'-0" | 5

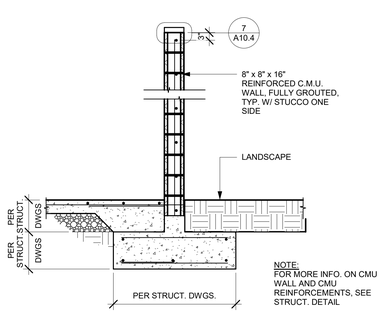

CMU WALL - SECTION | 1/2" = 1'-0" | 6

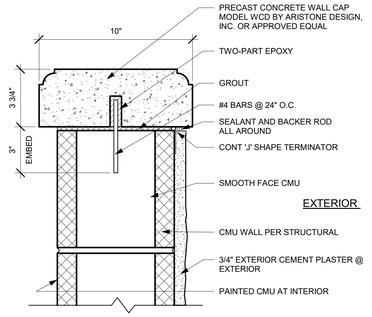

CMU WALL CAP | 3" = 1'-0" | 7

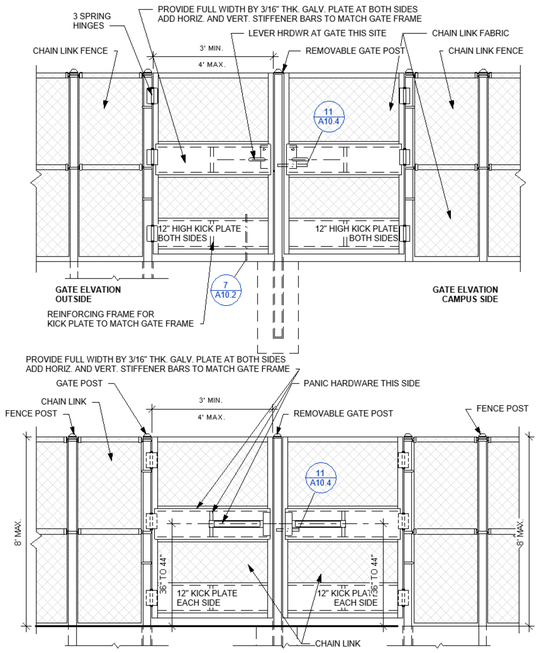

CHAIN LINK GATE DBL PH | 1/2" = 1'-0" | 10

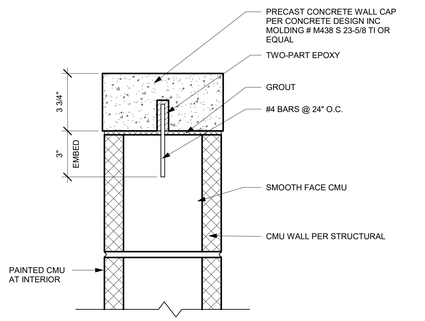

CMU WALL CAP | 3" = 1'-0" | 8

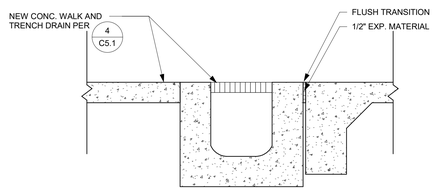

CONCRETE WALK AT (E) RAISED CONCRETE | 1" = 1'-0" | 9

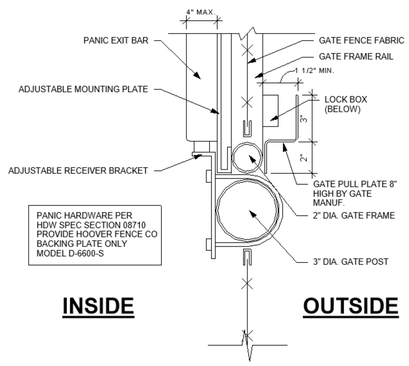

C.L. GATE LATCH P.H. | 3" = 1'-0" | 11

IDENTIFICATION STAMP
DIV. OF THE STATE ARCHITECT
APP. 04-118693 INC:
REVIEWED FOR
SS ☑ FLS ☑ ACS ☑
DATE: 03.13.2020

Revison	Date

Consultant

Engineer

studiowc
ARCHITECTURE + ENGINEERING
515 Encinitas Blvd, Ste. 201, Encinitas, California 92024
Telephone: (760) 634-8880 Fax: (760) 452-7541

LICENSED ARCHITECT
ROBERT D. WEBB
R.D.W.
C-28036
OCTOBER 31, 2020
STATE OF CALIFORNIA

CHET F. HARRITT ELEM. SCHOOL
LRC & CLASSROOM ADDITION
SANTEE SCHOOL DISTRICT

SITE DETAILS

Drawn: Author
Checked: Checker
Date: OCTOBER 18, 2019
Job: SSD-CFH-05

A10.4

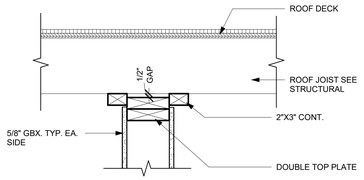

TOP OF WALL - JOISTS PERPENDICULAR TO WALL

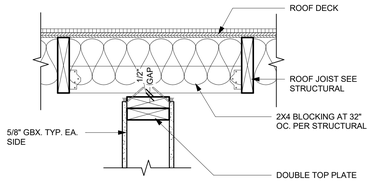

TOP OF WALL - JOISTS PARALLEL TO WALL

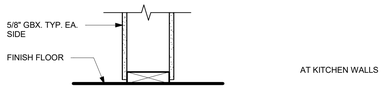

BOTTOM OF WALL

NOTE:
PLYWOOD CORNER TO CORNER AT SHEARWALLS. SEE STRUCTURAL FOR LOCATIONS.

NON-RATED NON-BEARING WALL | 1 1/2" = 1'-0" | 2

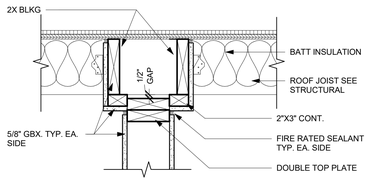

TOP OF WALL - JOISTS PERPENDICULAR TO WALL

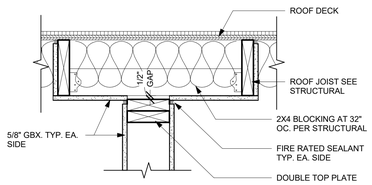

TOP OF WALL - JOISTS PARALLEL TO WALL

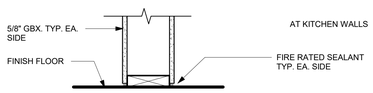

BOTTOM OF WALL

1 HR. RATED WALL ASSEMBLY
2x4 CBC TABLE 721.1(2) ITEM 14-1.3
2x6 CBC TABLE 721.1(2) ITEM 15-1.12
PROVIDE RATED ASSEMBLY **ONLY** AT LOCATIONS INDICATED ON FLOOR PLAN

NOTE:
PLYWOOD CORNER TO CORNER AT SHEARWALLS. SEE STRUCTURAL FOR LOCATIONS.

RATED NON-BEARING WALL | 1 1/2" = 1'-0" | 3

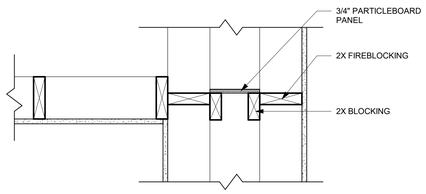

FIRE BLOCKING | 1 1/2" = 1'-0" | 4

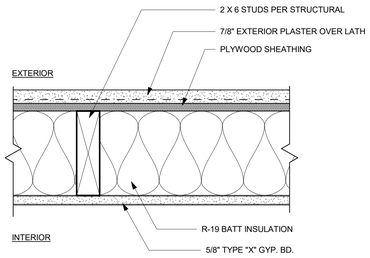

WALL TYPE WT-1

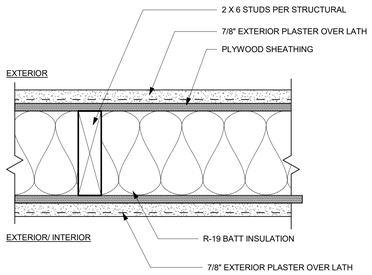

WALL TYPE WT-2

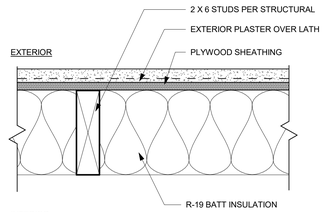

WALL TYPE WT-3

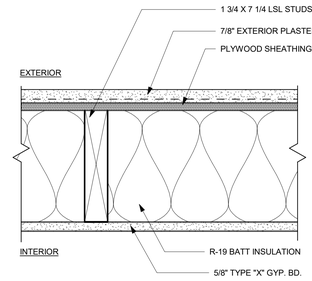

WALL TYPE WT-4

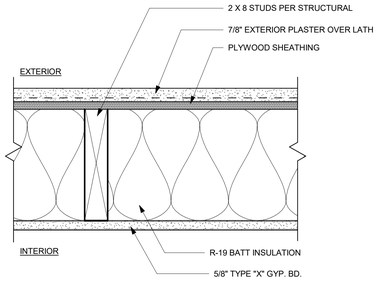

WALL TYPE WT-5

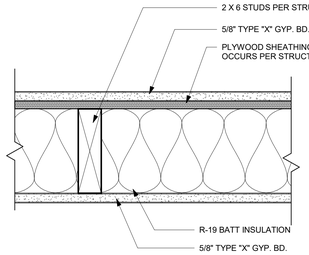

WALL TYPE WT-6

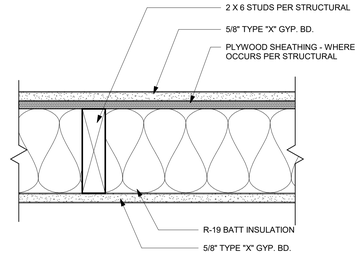

1 HR. RATED WALL ASSEMBLY
2X6 CBC TABLE 721.1(2) ITEM 15-1.13
PROVIDE RATED ASSEMBLY **ONLY** AT LOCATIONS INDICATED ON FLOOR PLAN

WALL TYPE WT-7

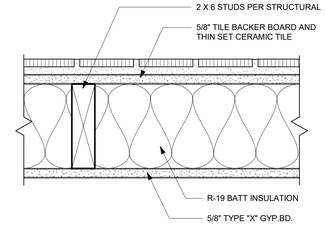

WALL TYPE WT-8

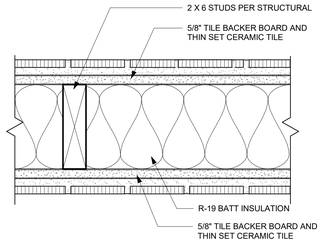

WALL TYPE WT-9

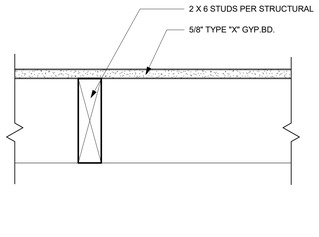

WALL TYPE WT-10

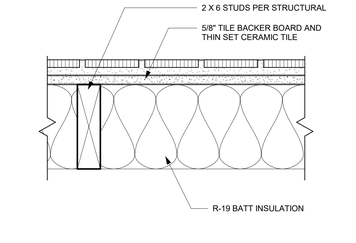

WALL TYPE WT-11

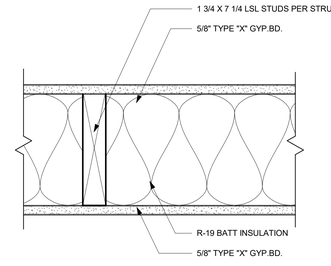

WALL TYPE WT-12

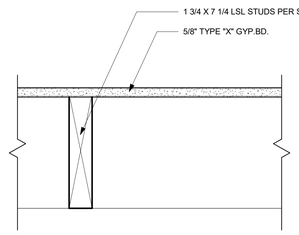

WALL TYPE WT-13

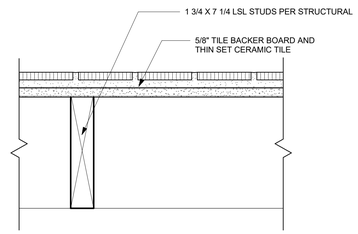

WALL TYPE WT-14

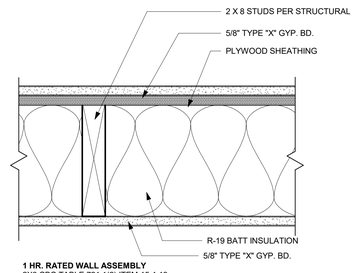

1 HR. RATED WALL ASSEMBLY
2X6 CBC TABLE 721.1(2) ITEM 15-1.13
PROVIDE RATED ASSEMBLY **ONLY** AT LOCATIONS INDICATED ON FLOOR PLAN

WALL TYPE WT-15

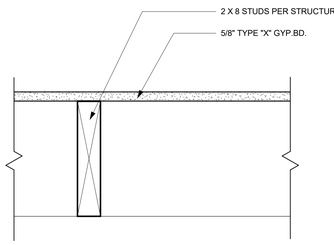

WALL TYPE WT-16

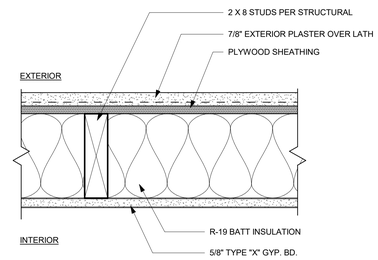

1 HR. RATED WALL ASSEMBLY
2X6 CBC TABLE 721.1(2) ITEM 15-1.13
PROVIDE RATED ASSEMBLY **ONLY** AT LOCATIONS INDICATED ON FLOOR PLAN

WALL TYPE WT-17

A60.1- WALL TYPES | 3" = 1'-0" | 1

IDENTIFICATION STAMP
DIV. OF THE STATE ARCHITECT
APP. 04-118693 INC:
REVIEWED FOR
SS ☑ FLS ☑ ACS ☑
DATE: 03.13.2020

Revison	Date

Consultant

Engineer

studiowc
ARCHITECTURE + ENGINEERING
515 Encinitas Blvd, Ste. 201, Encinitas, California 92024
Telephone: (760) 634-8880 Fax: (760) 452-7041

LICENSED ARCHITECT
ROBERT D. WEBB
C-28036
OCTOBER 31, 2020
STATE OF CALIFORNIA

CHET F. HARRITT ELEM. SCHOOL
LRC & CLASSROOM ADDITION
SANTEE SCHOOL DISTRICT

WALL TYPES AND DETAILS

Drawn: Author
Checked: Checker
Date: OCTOBER 18, 2019
Job: SSD-CFH-05

A20.0

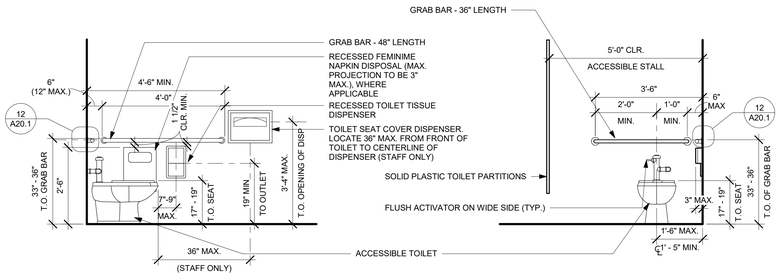

SIDE ELEVATION

SIDE ELEVATION

ACCESSIBLE TOILET (ADULT HEIGHT)

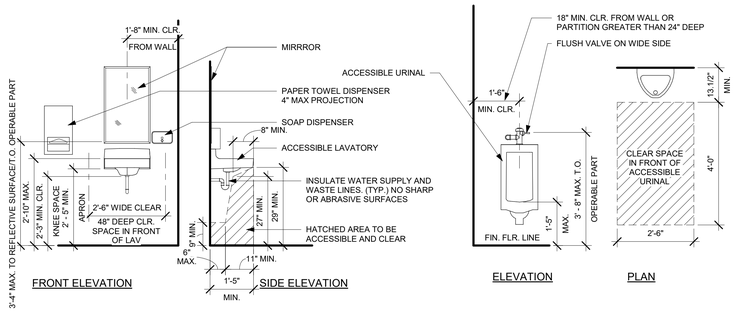

FRONT ELEVATION

SIDE ELEVATION

ELEVATION

PLAN

ACCESSIBLE LAVATORY

ACCESSIBLE URINAL

NO FLUSH VALVE AT WATERLESS URINALS

NOTE:
SEE FLOOR PLAN FOR ACTUAL LOCATIONS OF FIXTURES AND ACCESSORIES WITHIN THE ROOM.

ALL TOILETS WILL BE AT ADULT HEIGHT.

ACCESSIBLE TOILET ROOM FIXTURE MOUNTING HEIGHTS DETAIL | 1/2" = 1'-0" | 5

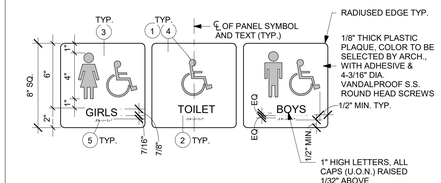

A

1. CHARACTER TYPE. CHARACTERS ON SIGNS SHALL BE RAISED 1/32 " (0.794 mm) MIN. AND SHALL BE SANS SERIF UPPERCASE CHARACTERS ACCOMPANIED BY CALIFORNIA CONTRACTED GRADE 2 BRAILLE COMPLYING WITH 11B-703.3, 11B-703.3.1.
2. CHARACTER SIZE. RAISED CHARACTERS SHALL BE A MIN. OF 5/8 INCH (15.9mm) AND A MAXIMUM OF 2 INCHES (51mm) HIGH.
3. 11B-703.5.1, 11B-703.6.2, 11B-703.7.1 FINISH AND CONTRAST. CHARACTERS, SYMBOLS AND THEIR BACKGROUND SHALL HAVE A NON GLARE FINISH. CHARACTERS AND SYMBOLS SHALL CONTRAST WITH THEIR BACKGROUND. EITHER LIGHT CHARACTERS ON A DARK BACKGROUND OR DARK CHARACTERS ON A LIGHT BACKGROUND.

B

4. 11B-703.2.4, 11B-703.2.6 PROPORTIONS. CHARACTERS ON SIGN SHALL HAVE A WIDTH-TO-HEIGHT RATIO OF BETWEEN 3:5 AND 1:1 AND A STROKE WIDTH-TO-HEIGHT RATIO OF BETWEEN 1:5 AND 1:10
5. 11B-703.3, 11B-703.3.1 BRAILLE. CALIFORNIA CONTRACTED GRADE 2 BRAILLE, SEE DETAIL 13 / A20.1
6. SEE DETAIL FOR MOUNTING HEIGHT 5 / A20.1

C

RESTROOM SIGN AT WALL | 1 1/2" = 1'-0" | 2

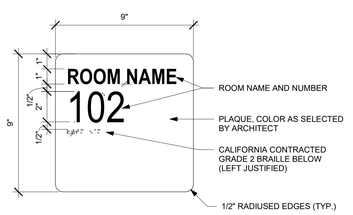

ROOM ID SIGN | 3" = 1'-0" | 6

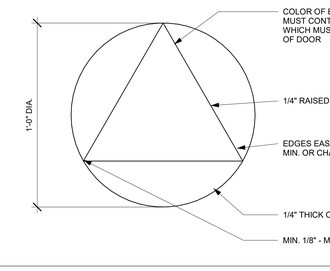

TOILET DOOR SIGNAGE - GENDER NEUTRAL | 3" = 1'-0" | 7A

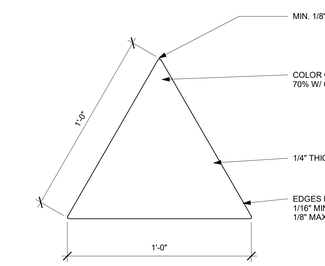

TOILET DOOR SIGNAGE-MEN | 3" = 1'-0" | 7B

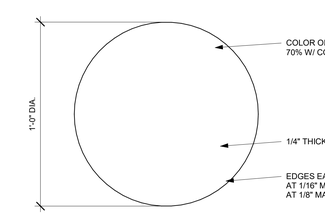

TOILET DOOR SIGNAGE-WOMEN | 3" = 1'-0" | 7C

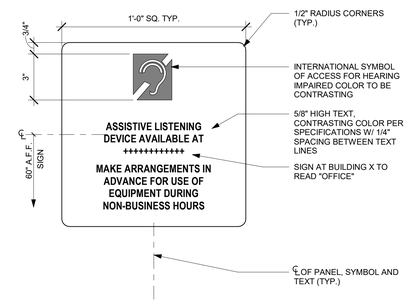

NOTE:
PORTABLE ASSISTIVE LISTENING DEVICE(S) SHALL BE SUPPLIED. SEE SPECS SECTION 27 41 19

ASSISTIVE LISTENING SIGN | 3" = 1'-0" | 4

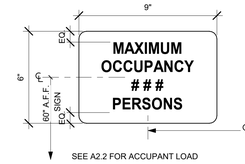

SEE A2.2 FOR ACCUPANT LOAD

OCCUPANCY LOAD SIGN | 3" = 1'-0" | 8

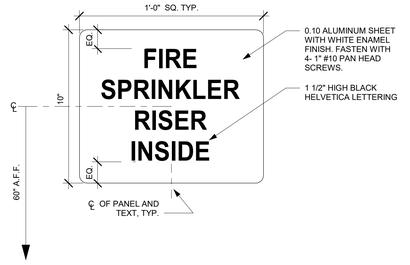

FIRE SPRINKLER RISER SIGN | 3" = 1'-0" | 9

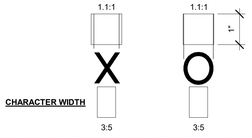

1. **CHARACTER TYPE:** CHARACTERS ON SIGNS SHALL BE RAISED 1/32 INCH (0.794 mm) MINIMUM AND SHALL BE SANS SERIF UPPERCASE CHARACTERS ACCOMPANIED BY CALIFORNIA CONTRACTED GRADE 2 BRAILLE COMPLYING WITH CBC 11B-703.2, 11B-703.6 (SEE NOTE 5 BELOW).
2. **CHARACTER SIZE:** RAISED CHARACTERS SHALL BE A MINIMUM OF 5/8 INCH (15.9mm) AND A MAXIMUM OF 2 INCHES (51 mm) HIGH (11B-703.2, 11B-703.6).
3. **FINISH AND CONTRAST:** CHARACTERS, SYMBOLS AND THEIR BACKGROUND SHALL HAVE A NON-GLARE FINISH. CHARACTERS AND SYMBOLS SHALL CONTRAST WITH THEIR BACKGROUND, EITHER LIGHT CHARACTERS ON A DARK BACKGROUND OR DARK CHARACTERS ON A LIGHT BACKGROUND (CBC 11B-703.5.1, 11B-703.6.2, 11B-703.7.1)
4. **PROPORTIONS:** IT SHALL BE SELECTED FROM FONTS WHERE THE WIDTH OF THE UPPERCASE LETTER "O" IS 60% MINIMUM AND 110% MAXIMUM OF THE HEIGHT OF THE UPPERCASE LETTER "I". STROKE THICKNESS OF UPPERCASE LETTER "I" SHALL BE 15% MAXIMUM OF THE HEIGHT OF THE CHARACTER. (CBC SECTIONS 11B-703.2.4 & 11B-703.2.6)

TABLE 11B-703.3.1 BRAILLE DIMENSIONS

MEASUREMENT RANGE	MINIMUM IN INCHES MAXIMUM IN INCHES
DOT BASE DIAMETER	0.059 (1.5 MM) TO 0.063 (1.6 MM)
DISTANCE BETWEEN TWO DOTS IN THE SAME CELL*	0.100 (2.5 MM)
DISTANCE BETWEEN CORRESPONDING DOTS IN ADJACENT CELLS*	0.300 (7.6 MM)
DOT HEIGHT	0.025 (0.6 MM) TO 0.037 (0.9 MM)
DISTANCE BETWEEN CORRESPONDING DOTS FROM ONE CELL DIRECTLY BELOW*	0.395 (10 MM) TO 0.400 (10.2 MM)
* MEASURED CENTER TO CENTER	

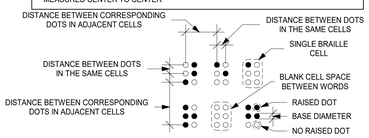

BRAILLE STYLE PROPORTION | 6" = 1'-0" | 13

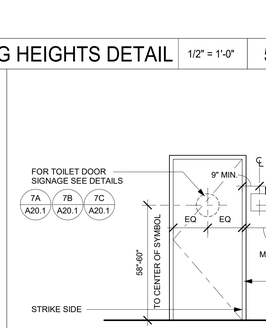

SIGNAGE LOCATION-WALL | 3/8" = 1'-0" | 10

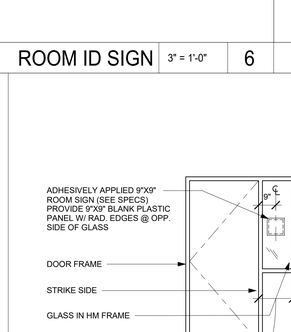

SIGNAGE LOCATION-GLASS | 3/8" = 1'-0" | 14

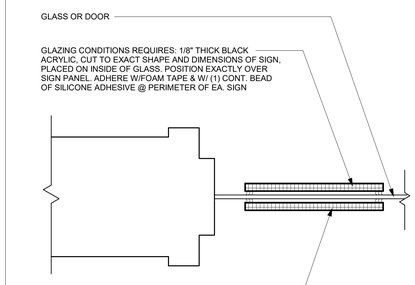

NOTE: FOR USE @ DOORS AND GLAZING

SIGN ATTACHMENT | 6" = 1'-0" | 11

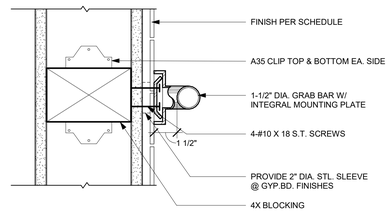

GRAB BAR ATTACHMENT | 3" = 1'-0" | 12

NOTE:
1. BUBBLER SHALL BE ACTIVATED BY A MANUALLY OPERATED SYSTEM THAT IS FRONT OR SIDE MOUNTED AND LOCATED WITHIN 5" OF FRONT EDGE OF UNIT. BUBBLER OUTLET ORIFICE SHALL BE LOCATED WITHIN 5" OF FRONT OF UNIT. BUBBLER WATER FLOW SHALL BE SUBSTANTIALLY PARALLEL TO FRONT EDGE OF UNIT
2. SPOUT SHALL PROVIDE A FLOW OF WATER 4" HIGH SO AS TO ALLOW THE INSERTION OF CUP OR GLASS UNDER THE FLOW OF WATER
3. WHERE SPOUTS ARE LOCATED BETWEEN 3 INCHES (76MM) AND 5 INCHES (127 MM) MAXIMUM FROM THE FRONT OF THE UNIT, THE ANGLE OF THE WATER STREAM SHALL BE 15 DEGREES MINIMUM

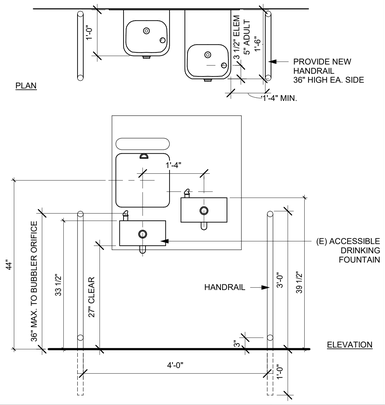

ACCESSIBLE DRINKING FOUNTAIN - WITH HANDRAILS | 3/4" = 1'-0" | 1

NOTE:
1. BUBBLER SHALL BE ACTIVATED BY A MANUALLY OPERATED SYSTEM THAT IS FRONT OR SIDE MOUNTED AND LOCATED WITHIN 5" OF FRONT EDGE OF UNIT. BUBBLER OUTLET ORIFICE SHALL BE LOCATED WITHIN 5" OF FRONT OF UNIT. BUBBLER WATER FLOW SHALL BE SUBSTANTIALLY PARALLEL TO FRONT EDGE OF UNIT
2. SPOUT SHALL PROVIDE A FLOW OF WATER 4" HIGH SO AS TO ALLOW THE INSERTION OF CUP OR GLASS UNDER THE FLOW OF WATER
3. WHERE SPOUTS ARE LOCATED BETWEEN 3 INCHES (76MM) AND 5 INCHES (127 MM) MAXIMUM FROM THE FRONT OF THE UNIT, THE ANGLE OF THE WATER STREAM SHALL BE 15 DEGREES MINIMUM

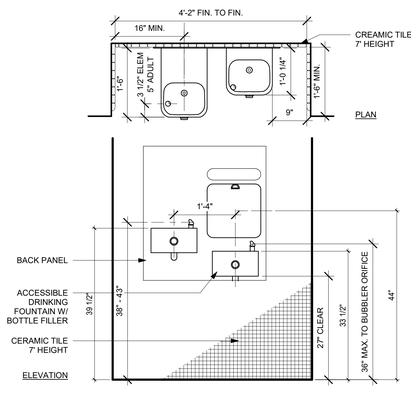

ACCESSIBLE DRINKING FOUNTAIN | 3/4" = 1'-0" | 15

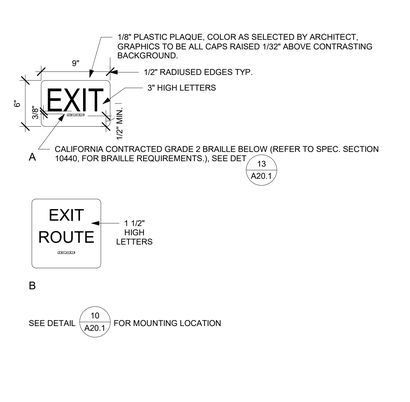

ROOM EXIT SIGN | 1 1/2" = 1'-0" | 16

IDENTIFICATION STAMP
DIV. OF THE STATE ARCHITECT
APP. 04-118693 INC:
REVIEWED FOR
SS ☑ FLS ☑ ACS ☑
DATE: 03.13.2020

Revison	Date

Consultant

Engineer

studiowc
ARCHITECTURE + ENGINEERING
515 Encinitas Blvd, Ste. 201, Encinitas, California 92024
Telephone: (760) 632-8800 Fax: (760) 452-7541

LICENSED ARCHITECT ROBERT D. WEBB #24 R D Webb C-28036 EXPIRATION 31, 2021 STATE OF CALIFORNIA

CHET F. HARRITT ELEM. SCHOOL
LRC & CLASSROOM ADDITION
SANTEE SCHOOL DISTRICT

RR & SIGNAGE DETAILS

Drawn: Author
Checked: Checker
Date: OCTOBER 18, 2019
Job: SSD-CFH-05

A20.1

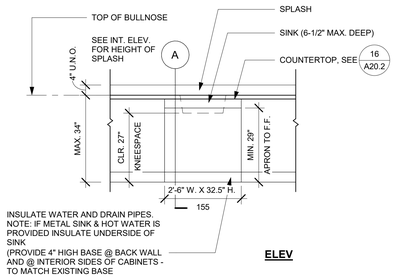

ELEV

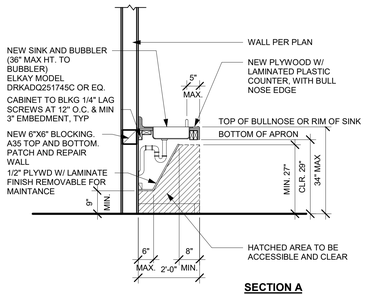

SECTION A

ACCESSIBLE SINK | 1/2" = 1'-0" | 2

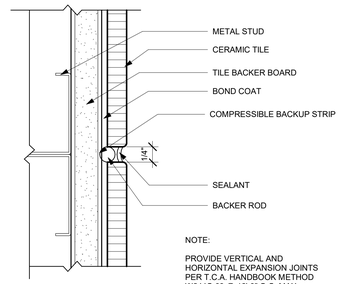

NOTE:

PROVIDE VERTICAL AND HORIZONTAL EXPANSION JOINTS PER T.C.A. HANDBOOK METHOD W244C-09 @ 16'-0" O.C. MAX.

JOINT AT TILE WALL | 12" = 1'-0" | 3

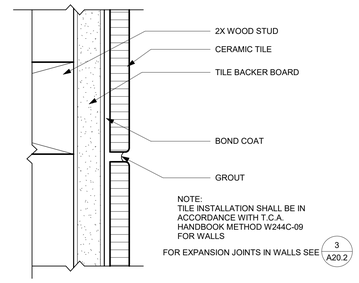

NOTE:
TILE INSTALLATION SHALL BE IN ACCORDANCE WITH T.C.A. HANDBOOK METHOD W244C-09 FOR WALLS

FOR EXPANSION JOINTS IN WALLS SEE 3 A20.2

TILE WALL | 12" = 1'-0" | 4

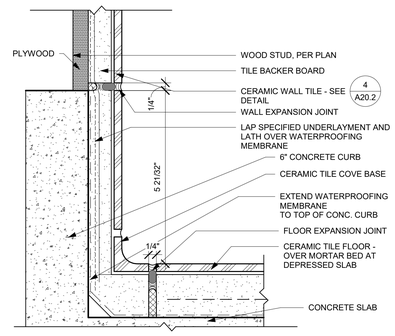

TILE COVE BASE | 6" = 1'-0" | 5

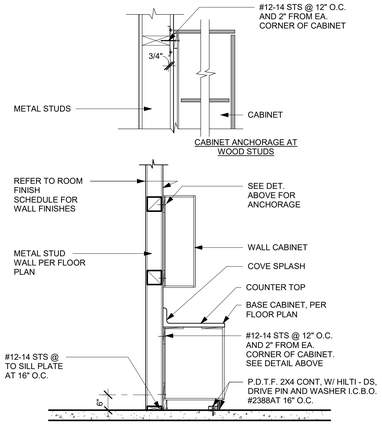

CABINET ANCHORAGE	REFERENCE
VERTICAL LOAD REQ.	TABLE NO. 16 A&B
LATERAL FORCE REQ.	TABLE NO. 16 A&O

PROVIDE BRACING AND ANCHORAGE DETAILS FOR WALL HUNG CABINETS AND FLOOR SUPPORTED STORAGE RACKS, CABINETS AND BOOK STACKS OVER FIVE FEET IN HEIGHT. DESIGN SUPPORTING PARTITIONS AND WALLS TO RESIST FORCES APPLIED BY CABINET ANCHORAGES

CABINETRY WALL ATTACHMENT | 1/2" = 1'-0" | 6

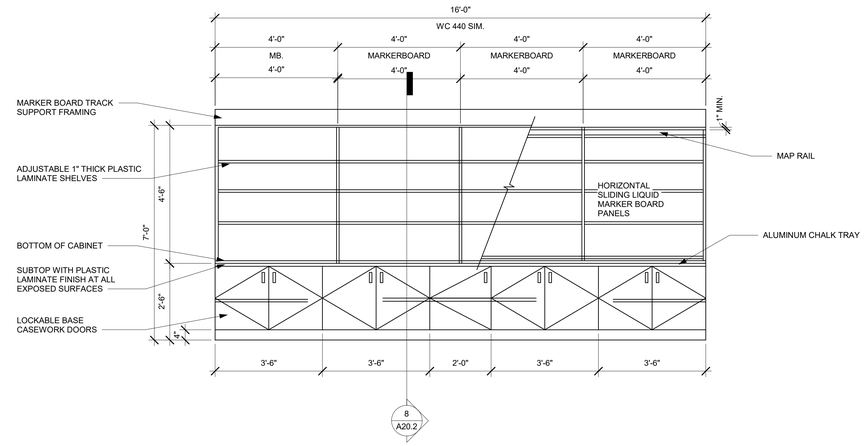

CASEWORK- TEACHING WALL ELEVATION | 1/2" = 1'-0" | 7

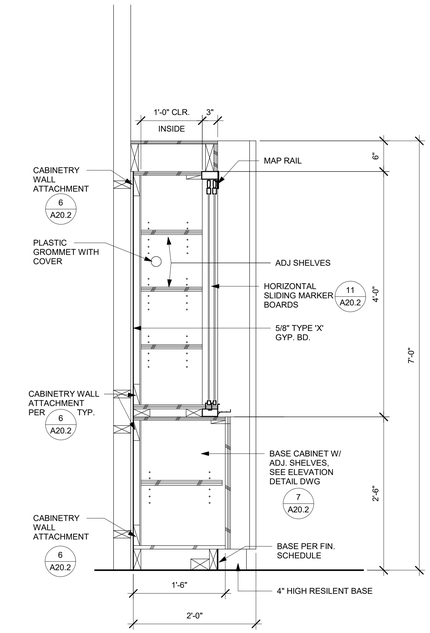

CASEWORK- TEACHING WALL SECTION | 1" = 1'-0" | 8

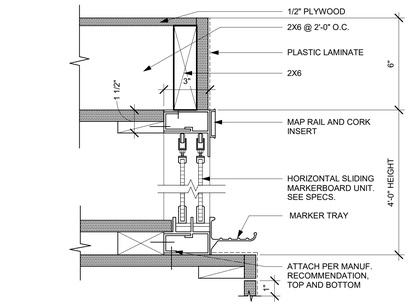

2 TRACK SLIDING MARKERBOARD | 3" = 1'-0" | 11

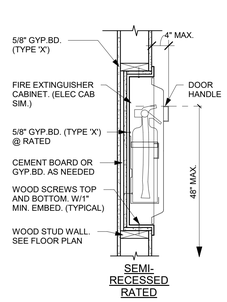

FIRE EXTINGUISHER | 1" = 1'-0" | 12

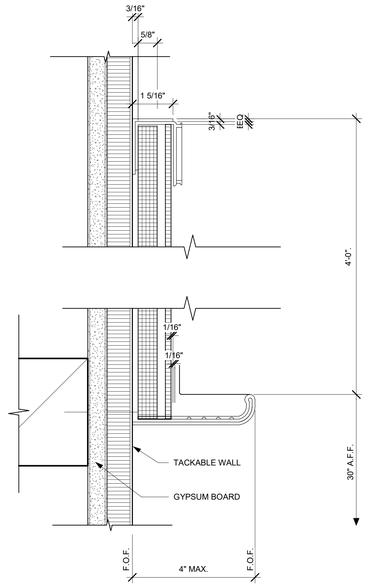

MARKER BOARD- WALL MOUNTED | 6" = 1'-0" | 18

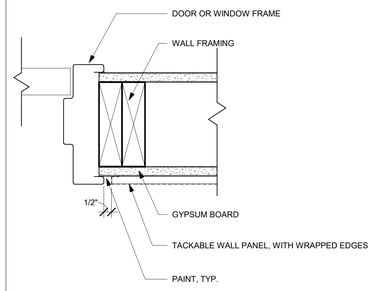

TACKABLE PANEL AT FRAME | 3" = 1'-0" | 14

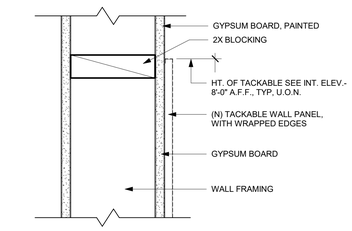

TACKABLE PANEL AT TOP | 3" = 1'-0" | 15

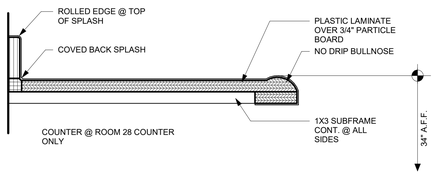

COUNTERTOP-FORMED EDGE | 3" = 1'-0" | 16

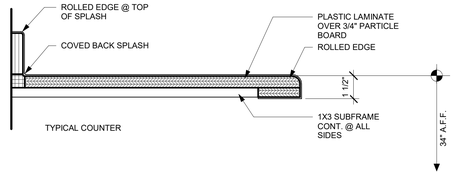

COUNTERTOP-ROLLED EDGE | 3" = 1'-0" | 17

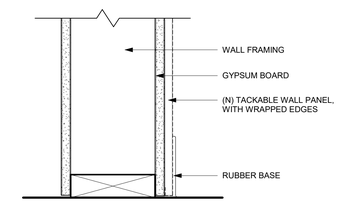

TACKABLE PANEL AT BASE | 3" = 1'-0" | 20

IDENTIFICATION STAMP
DIV. OF THE STATE ARCHITECT
APP. 04-118693 INC:
REVIEWED FOR
SS ☑ FLS ☑ ACS ☑
DATE: 03.13.2020

Revision	Date

Consultant

Engineer

studiowc
ARCHITECTURE + ENGINEERING
515 Encinitas Blvd, Ste. 201 Encinitas, California 92024
Telephone: (760) 634-8880 Fax: (760)452-7041

LICENSED ARCHITECT ROBERT D. WEBB
C-28036
OCTOBER 31, 2021
STATE OF CALIFORNIA

CHET F. HARRITT ELEM. SCHOOL
LRC & CLASSROOM ADDITION
SANTEE SCHOOL DISTRICT

INTERIOR DETAILS

Drawn: Author
Checked: Checker
Date: OCTOBER 18, 2019
Job: SSD-CFH-05

A20.2

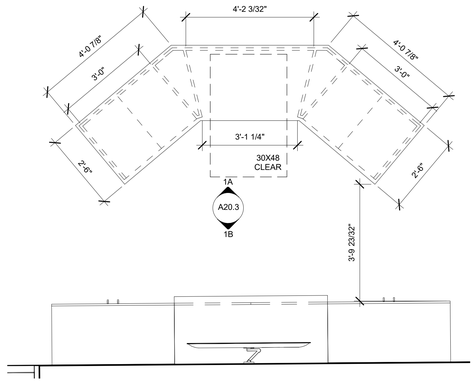

ENLARGED CIRCULATION DESK | 1/2" = 1'-0" | 1

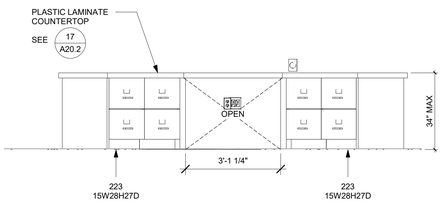

CIRCULATION DESK- EAST VIEW | 1/2" = 1'-0" | 1A

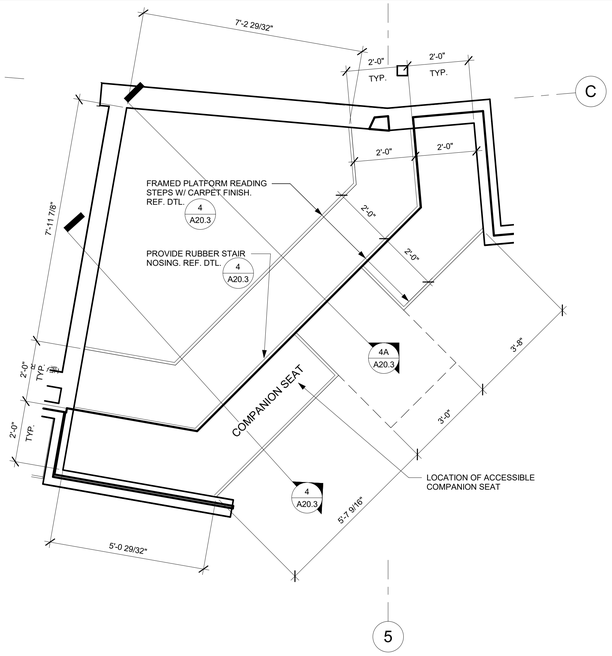

ENLARGED RAISED READING AREA | 1/2" = 1'-0" | 6

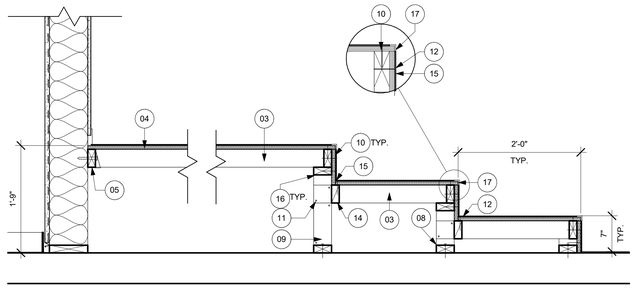

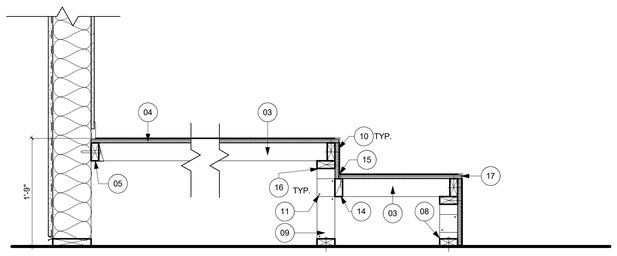

4A

RAISED READING SEAT SECTION | 1" = 1'-0" | 4

KEYNOTES

03	2X4 FRAMING AT 16" O.C. TYP.
04	3/4" PWD. PROVIDE 3/4" RADIUSED FRONT CORNER EDGES TYP.
05	2X4 LEDGER ANCHOR TO AE. WALL STUD WITH 1/2" X 4 1/2" L.B.
08	2X4 TREATED PLATES
09	2X CRIPPLE LEDGER FROM PLATE TO FRAMING. ANCHOR TO VERT. MEMEBER WITH 2 16D
10	8D AT 16" O.C.
11	2-16D AT AE. LAP
12	CARPET
14	2X BLOCKING
15	8D EA. STUD
16	2X4 PLATE
17	BURKE-MERCER CARPET STAIR NOSING DOUBLE UNDERCUT #565 OR EQUAL

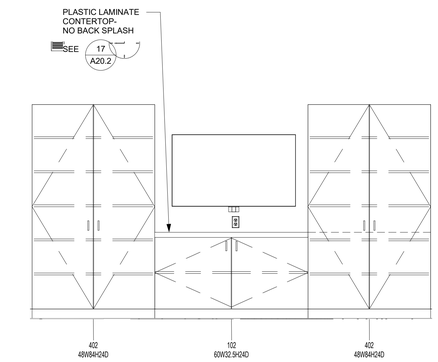

CIRCULATION DESK- WEST VIEW | 1/2" = 1'-0" | 1B

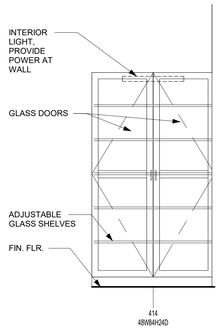

DISPLAY CABINET | 1/2" = 1'-0" | 10

GENERAL NOTES

1. ALL FINISHES SHALL BE PLASTIC LAMINATE

2. KEYNOTES ARE INDICATED AT ONLY A PORTION OF THE ELEMENTS. ELEMENTS ILLUSTRATED SIMILARLY, MIRRORED DESIGN, AND SIMILAR CONDITIONS SHALL BE ASSUMED TO BE NOTED SIMILARLY

3. NO SHARP OBSTRUCTIONS OR PROJECTIONS AT KNEE SPACE AREAS

4. PROVIDE GROMMET HOLE LINERS AT HOLES, DOUG MOCKETT EDP 2 - 1/2" OR EQUAL

5. PROVIDE RADIUS WATERFALL EDGE AT COUNTERTOP

6. BADE CABINETS SHALL BE PROVIDED WITH FILE DRAWERS AT BOTTOM DRAWER UNITS WITH FULL EXTENSION SLIDES AND FILE FOLLOWERS

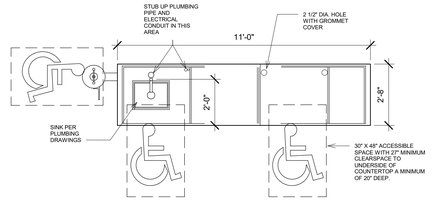

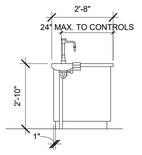

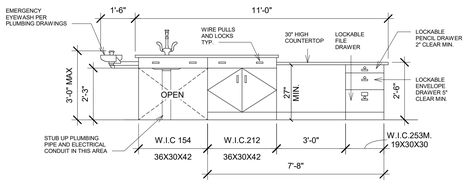

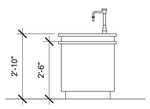

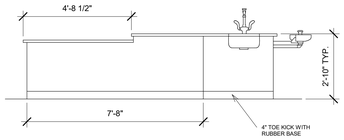

CASEWORK- SCIENCE DEMO TABLE | 3/8" = 1'-0" | 12

IDENTIFICATION STAMP
DIV. OF THE STATE ARCHITECT
APP. 04-118693 INC:
REVIEWED FOR
SS ☑ FLS ☑ ACS ☑
DATE: 03.13.2020

Revision	Date

Consultant

Engineer

studiowc
ARCHITECTURE + ENGINEERING
515 Encinitas Blvd, Ste. 201, Encinitas, California 92024
Telephone: (760) 632-8800 Fax: (760) 452-7041

LICENSED ARCHITECT
ROBERT D. WEBB
C-28036
OCTOBER 31, 2020
STATE OF CALIFORNIA

CHET F. HARRITT ELEM. SCHOOL
LRC & CLASSROOM ADDITION
SANTEE SCHOOL DISTRICT

INTERIOR DETAILS

Drawn: Author
Checked: Checker
Date: OCTOBER 18, 2019
Job: SSD-CFH-05

A20.3

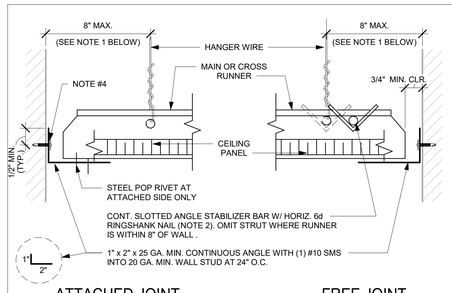

ATTACHED JOINT FREE JOINT

NOTES:

1. PROVIDE #12 GAGE HANGER WIRES AT THE ENDS OF ALL MAIN AND CROSS RUNNERS WITHIN EIGHT (8) INCHES OF THE SUPPORT OR WITHIN ONE-FOURTH (1/4) OF THE LENGTH OF THE END TEE, WHICHEVER IS LESS, FOR THE PERIMETER OF THE CEILING AREA. PERIMETER WIRES ARE NOT REQUIRED WHEN THE LENGTH OF THE END TEE IS EIGHT (8) INCHES OR LESS.
2. NAILS AT ENDS OF HORIZONTAL STABILIZERS ARE TO BE PLACED WITH NAIL HEAD TOWARD CENTER LINE OF SPAN OF STRUT.
3. (1) #10 SMS TO 20 GA. MIN. WALL STUD AT 24" O.C.

CEILING PERIMETER | 3" = 1'-0" | 1

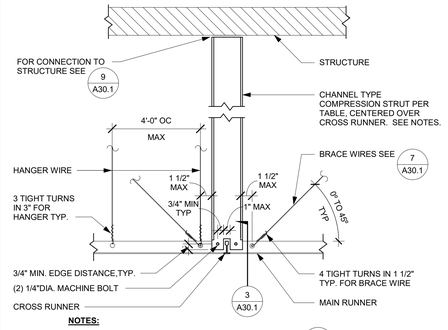

NOTES:

NOT TO EXCEED THE ALLOWABLE LENGTH GIVEN IN THE TABLE FOR THE COMPRESSION STRUT SELECTED. SEE 4 A30.1

CEILING- CHANNEL TYPE STRUT | 1 1/2" = 1'-0" | 2

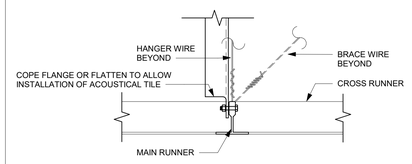

CHANNEL TYPE STRUT SECTION | 3" = 1'-0" | 3

CHANNEL COMPRESSION STRUT	MAXIMUM LENGTH
250S125-33	5'-0"
250S137-33	6'-10"
362S137-33	8'-0"
250137-43	8'10"
400S137-43	10'-10"

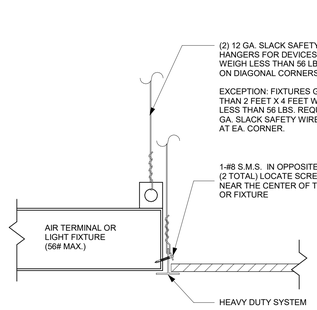

CEILING- CHANNEL COMPRESSION STRUT TABLE | 3" = 1'-0" | 4

CEILING- LIGHT FIXTURES/AIR TERMINAL SUPPORT | 3" = 1'-0" | 5

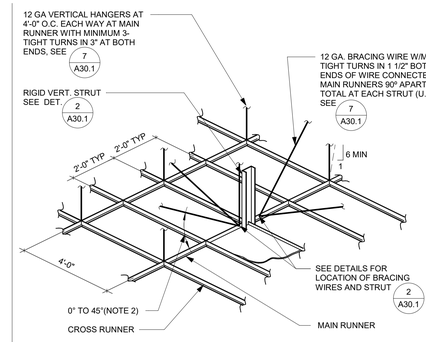

NOTES:

1. STRUTS SHALL NOT REPLACE HANGER WIRES.
2. THE MINIMUM ACCEPTABLE ANGLE IS DETERMINED SUCH THAT THE WIRES DO NOT INTERFERE WITH THE RUNNERS, LIGHT FIXTURES, ETC. AND REMAIN STRAIGHT AND UNOBSTRUCTED.

CEILING- SUSPENSION AND BRACING ASSEMBLY | 3" = 1'-0" | 6

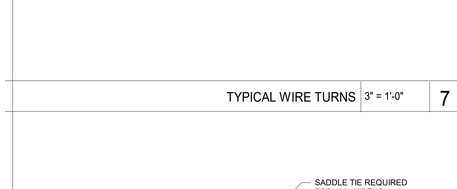

HANGER WIRE

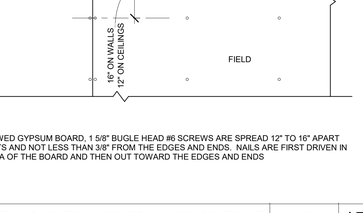

BRACING WIRE

TYPICAL WIRE TURNS | 3" = 1'-0" | 7

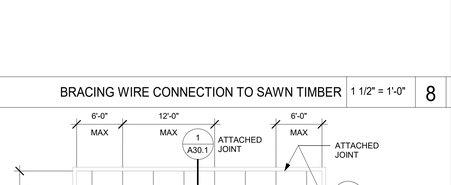

BRACING WIRE CONNECTION TO SAWN TIMBER | 1 1/2" = 1'-0" | 8

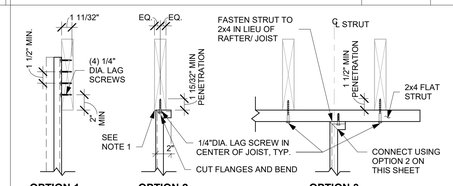

CHANNEL STRUT

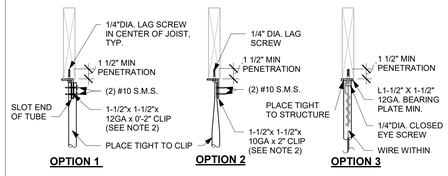

TUBE STRUT

NOTES:

1. WEB OF CHANNEL TO BEAR WITHIN WIDTH OF WOOD MEMBER.
2. VERTICAL LEG OF MEMBER TO FALL WITHIN THE WIDTH OF THE WOOD MEMBER.
3. SEE PAGE 5.50 FOR ADDITIONAL INFORMATION.

STRUT CONNECTION TO SAWN TIMBER W/O GYP. BD. | 1 1/2" = 1'-0" | 9

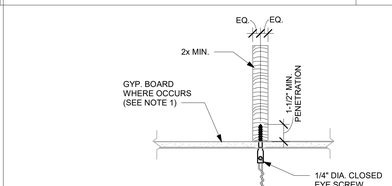

NOTE:

(1) WHEN FIRE RATED GYP. BOARD IS INSTALLED ON THE BOTTOM FLANGES, USE SCREW EYES W/ SUFFICIENT LENGTH TO AVOID DAMAGING THE FIRE RATED GYP. BOARD AND MEET MIN. PENETRATION.

CEILING- HANGER WIRE CONNECTION TO SAWN TIMBER | 1 1/2" = 1'-0" | 10

1. CEILING SYSTEM GENERAL NOTES

1.01 Ceiling system components shall comply with ASTM C635-07 and Section 5.1 of ASTM E580-10a.
1.02 The ceiling grid system must be rated heavy duty as defined by ASTM C635-08.
1.03 Ceiling systems - see specifications
1.04 Seismic Wall Clip - see specifications
1.05 Ceiling panels shall not support any light fixtures, air terminals or devices.
1.06 For ceiling installations utilizing acoustical tile panels of mineral or glass fiber, it is not mandatory to provide 3/4" clearance between the acoustical tile panels and the wall on the sides of the ceiling which are free to slip. For all other ceiling panel types, provide 3/4" clearance between the ceiling panel and the wall on the sides of the ceiling free to slip.
1.07 Splices will not be permitted in any hanger wires

2. MATERIALS

2.01 Ceiling wire shall be Class 1 zinc coated (galvanized) carbon steel conforming to ASTMA641-09a. Wire shall be #12 gauge (0.106" diameter) with soft temper and minimum tensile strength = 70 ksi.
2.02 Galvanized sheet steel (including that used for metal stud and track compression struts/post) shall conform to ASTM A653-11, or other equivalent sheet steel listed in Section A2.1 of the North American Specification for the Design of Cold Formed Steel Structural Members 2007, including supplement 2 dated 2010 (AISI S100-07/S2-10). Material 43 mil (18 gauge) and lighter shall have a minimum yield strength of 33 ksi. Material 54 mil (16 gauge) and heavier shall have a minimum yield strenght of 50 ksi.
2.03 Electrical metallic tube (EMT) shall be ANSI C80.3/UL 797 cabron steel with G90 galvanizing. EMT shall have minimum yield strength (Fy) of 30 ksi and minimum ultimate strength (Fu) of 48 ksi.

3. ATTACHMENT OF HANGAR AND BRACING WIRES:

3.01 Separate all ceiling hanger and bracing wires at least six (6) inches from all unbraced ducts, pipes, conduit, etc.
3.02 Hanger and bracing wires shall not attach to or bend around obstructions including but not limited to: piping, ductwork, conduit and equipment.
3.03 Hanger wires that are more than one (horizontal) in six (vertical) out of plumb shall have counter-sloping wires.
3.04 Slack safety wires shall be considered hanger wires for installation and testing requirements.
3.05 Hanger and bracing wire anchorage to the structure shall be installed in such a manner that the direction of the anchorage aligns closely with the direction of the wire. (e.g. bracing wire ceiling clips must be bent as shown in the details and rotated as required to align closely with the direction of the wire, screw eyes in wood must be installed so they align closely with the direction of the wire, etc.)
3.06 Provide trapeze or other supplemental support members at obstructions to typical hanger spacing. Provide additional hangers, struts or braces as required at all ceiling breaks, soffits, or discountinuous areas. Hanger wires that are more than 1 in 6 out of plumb shall have counter - sloping wires.

4. FASTENERS AND WELDING

4.01 Sheet metal screws shall comply with ASTM C1513-10, ASME B18.6.4-89 (R2005). Penetration of screws through joined materail shall not be less than three exposed threads.
4.02 Expansion anchor shall be per specification
4.03 Power-Actuated fasteners shall be per specification
4.04 If not otherwise specified in the evaluation report, power-actuated fasteners install in steel shall be installed so the entire pointed end of the fastener is driven through the steel member.
4.05 Power-Actuated fasteners in concrete are not permitted for bracing wire.
4.06 Concrete reinforcement and prestressing tendons shall be located by non-destructive means prior to installing post - installed anchor.
4.07 Welding shall be in accordance with AWS D1.3 using E60XX series electrodes

5. TESTING: All field testing must be done in the presence of the project inspector
5.01 Post-installed anchors in concrete used to support hanger wires shall be tested at a frequency of 10 percent. Power actuated fasteners in concrete shall be field tested for 200 lbs. in tension. All other post-installed anchors in concrete shall be tested in accordance with CBC Section 1913A.7.
5.02 Post-installed anchors in concrete used to attach bracing wires shall be tested at a frequency of 50 percent in accordance with CBC Section 1913A.7.

6. LIGHT FIXTURES

6.01 All light fixtures shall be positively attached to the ceiling suspension systems by mechanical means to resist a horizontal force equal to the weight of the fixture. A minimum of two screws or approved fasteners are required at each light fixture, per ASTM E580, Section 5.3.1
6.02 Surface-mounted light fixtures shall be attached to the main runner with at least two positive clamping evices. The clamping device shall completely surround the supporting ceiling runner and be made of steel with a minimum thickness of #14 gauge. Rotational spring catches do not comply. A #12 gauge slack safety wire shall be connected from each clamping device to the structure above. Provide additional supports when light fixtures are eight (8) feet or longer or exceed 56 lb. Maximum spacing between supports shall not exceed eight (8) feet.
6.03 Light fixtures weighing less than or equal to 10 lb. shall have a minimum of one (1) #12 gauge slack safety wire connected from the fixture housing to the structure above.
6.04 Light fixtures weighing greater than 10 lb. but less than or equal to 56 lb. may be supported directly on the ceiling runners, but they shall have a minimum of two (2) #12 gauge slack safety wires connected from the fixture housing at diagonal corners to the structure above.
Exception: All light fixtures greater than two by four feet weighing less than 56 lbs. shall have a 12 gauge slack safety wire at each corner.
6.05 All light fixtures weighing greater than 56 lbs. shall be independently supported by not less than four (4) taut #12 gauge hanger wires (one at each corner) attached from the fixture housing to the structure above or other approved hangers. The four (4) taut #12 gauge wires or other approved hangers, including their attachment to the structure above, shall be capable of supporting four (4) times the weight of the fixture.

7. SERVICES WITHIN THE CEILING

7.01 All flexible sprinkler hose fitting mounting brackets, ceiling-mounted air terminals or other services shall be positively attached to the ceiling suspension systems by mechanical means. Screws or approved fasteners are required. A minimum of two attachments are required at each component.
7.02 Ceiling-mounted air terminal or other services weighing less than or equal to 20 lb. shall have one (1) #12 gauge slack safety wire attached from the terminal or service to the structure above.
7.03 Flexible sprinkler hose fittings, ceiling-mounted air terminals or other services weighing more than 20 lb. but less than or equal to 56 lb. shall have two (2) #12 gauge slack safety wires (at diagonal corners) connected from the terminal or service to the structure above.
7.04 Flexible sprinkler hose fittings, ceiling-mounted air terminals or other services weighing more than 56 lb. shall be supported directly from the structure above by not less than four (4) taut #12 gauge hanger wires attached from the terminal or service to the structure above or other approved hangers.

8. OTHER DEVICES WITHIN THE CEILING

8.01 All lightweight miscellaneous devices, such as strobe lights, occupancy sensors, speakers, exit signs, etc., shall be attached to the ceiling grid. In addition, devices weighing more than 10 lbs. shall have a #12 gauge slack safety wire anchored to the structure above. Devices weighing more than 20 lb. shall be supported independently from the structure above.

T0.1- GENERAL NOTES | 12" = 1'-0" | 20

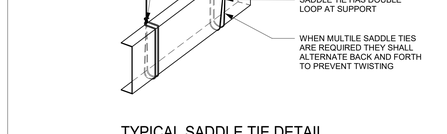

TYPICAL SADDLE TIE DETAIL

HANGER WIRE CONDITION SHOWN.
BRACE WIRE CONDITION SIMILAR

CEILING- TYPICAL SADDLE TIE DETAIL | NTS | 11

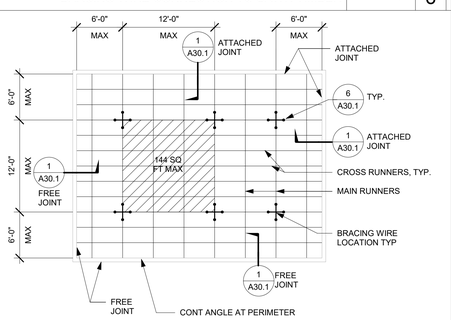

NOTE:
BRACING WIRES AND COMP. STRUT SHALL OCCUR AT EVERY 144 SF. MAX. IN ROOMS OVER 144 SF.

BASED ON SDS 0.994

CEILING- ACOUSTICAL TILE CLG 12' X 12' BRACE ASSEMBLY SPACING | 1/8" = 1'-0" | 12

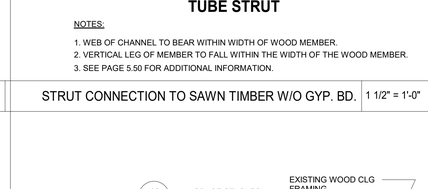

HORIZONTAL LATH NAILING

ILUSTRATION SHOWING HOW A NAILED ON CEILING CAN BE GIVEN ADDITIONAL SUPPORT THROUGH USE OF STRONGHOLD EARTHQUAKE STAPLES IN BUILDINGS LOCATED IN AREAS SUBJECT TO EARTHQUAKE OR OTHER DISTURBANCES

CEILING- PLASTER CLG DETAIL | 3" = 1'-0" | 13

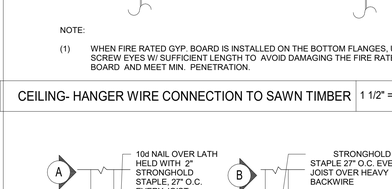

LONGITUDINAL SECTIONS OF JOISTS

CEILINGS- LATH ATTACHMENT DTL | 3" = 1'-0" | 14

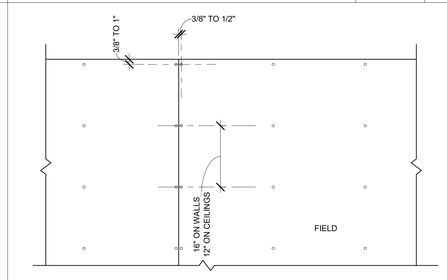

IN SINGLE SCREWED GYPSUM BOARD, 1 5/8" BUGLE HEAD #6 SCREWS ARE SPREAD 12" TO 16" APART ALONG SUPPORTS AND NOT LESS THAN 3/8" FROM THE EDGES AND ENDS. NAILS ARE FIRST DRIVEN IN THE MIDDLE AREA OF THE BOARD AND THEN OUT TOWARD THE EDGES AND ENDS

CEILING - GYPSUM BOARD NAILING SCHEDULE | 1" = 1'-0" | 15

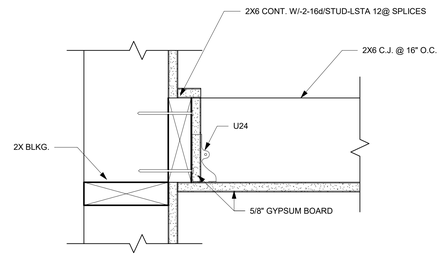

CEILING FRAMING | 3" = 1'-0" | 16

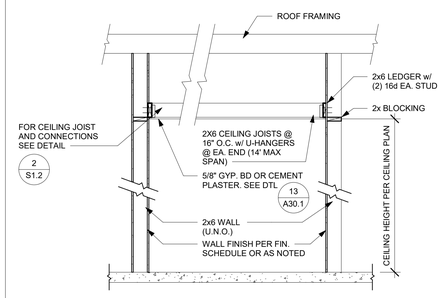

INT GYP OR PLS CLG WD STUD | 1/2" = 1'-0" | 17

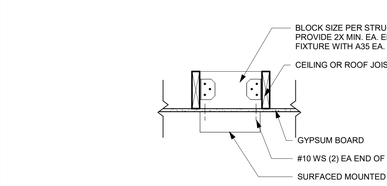

CEILING - SURFACE MOUNTED LIGHT | 1" = 1'-0" | 18

IDENTIFICATION STAMP
DIV. OF THE STATE ARCHITECT
APP. 04-118693 INC:
REVIEWED FOR
SS ☑ FLS ☑ ACS ☑
DATE: 03.13.2020

Revison	Date

Consultant

Engineer

studiowc
ARCHITECTURE + ENGINEERING
515 Encinitas Blvd, Ste 201 Encinitas, California 92024
Telephone: (760) 634-8800 Fax: (760) 452-7541

LICENSED ARCHITECT ROBERT D. WEBB R.A. C-28036 REGISTERED 31, 2021 STATE OF CALIFORNIA

CHET F. HARRITT ELEM. SCHOOL
LRC & CLASSROOM ADDITION
SANTEE SCHOOL DISTRICT

RCP DETAILS

Drawn: Author
Checked: Checker
Date: OCTOBER 18, 2019
Job: SSD-CFH-05

A30.1

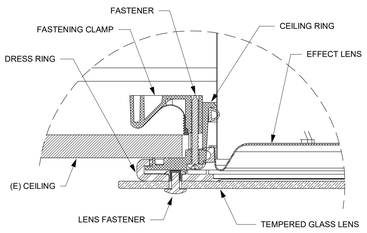

14" CEILING ATTACHMENT DTL | 3" = 1'-0" | 1

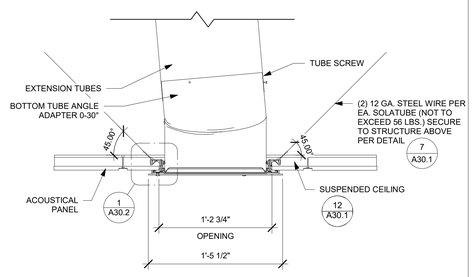

14"- SUSPENDED CEILING MOUNT | 1 1/2" = 1'-0" | 2

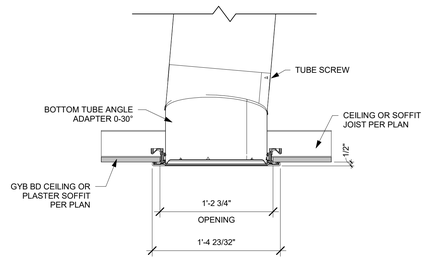

14"- HARDLID CEILING | 1 1/2" = 1'-0" | 3

NOTES:
1. ACCESS HATCH INSTALL PER MANUFACTURE SPECS.
2. PAINT TO MATCH ADJACENT FINISH

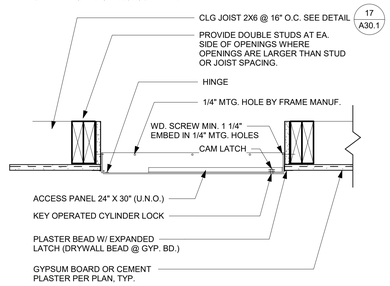

ACCESS PANEL DETAIL | 1 1/2" = 1'-0" | 4

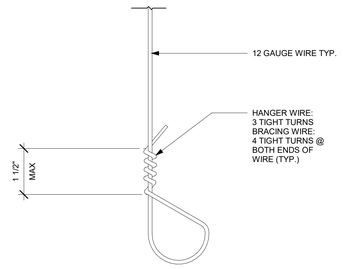

TYPICAL WIRE TWIST | 6" = 1'-0" | 5

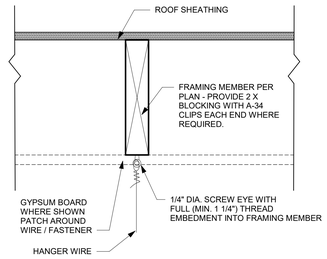

WIRE CONNECTION TO ROOF | 3" = 1'-0" | 7

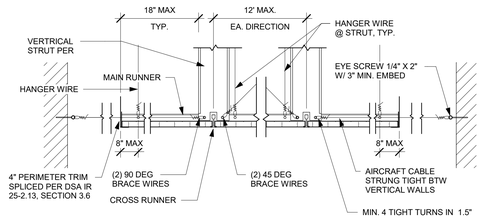

FLOATING CLG ATTACHMENT | 1 1/2" = 1'-0" | 6

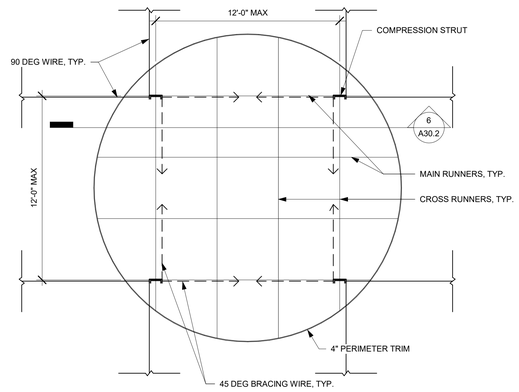

FLOATING CEILING PLAN | 1/2" = 1'-0" | 8

IDENTIFICATION STAMP
DIV. OF THE STATE ARCHITECT
APP. 04-118693 INC:
REVIEWED FOR
SS ☑ FLS ☑ ACS ☑
DATE: 03.13.2020

Revison	Date

Consultant

Engineer

studiowc
ARCHITECTURE + ENGINEERING
515 Encinitas Blvd, Ste. 201, Encinitas, California 92024
Telephone: (760) 632-8800 Fax: (760) 452-7541

LICENSED ARCHITECT
ROBERT D. WEBB
C-28036
OCTOBER 31, 2020
STATE OF CALIFORNIA

CHET F. HARRITT ELEM. SCHOOL
LRC & CLASSROOM ADDITION
SANTEE SCHOOL DISTRICT

RCP DETAILS

Drawn: Author
Checked: Checker
Date: OCTOBER 18, 2019
Job: SSD-CFH-05

A30.2

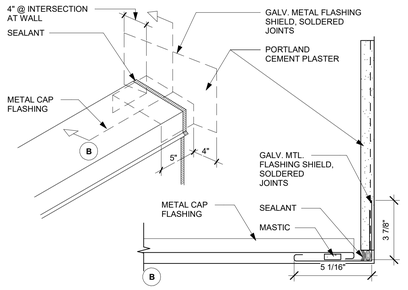

FLASHING AT WALL | 3" = 1'-0" | 1

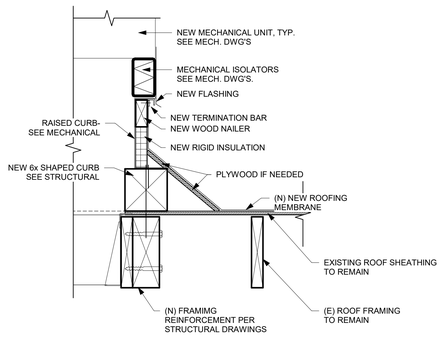

MECHANICAL CURB | 1 1/2" = 1'-0" | 4

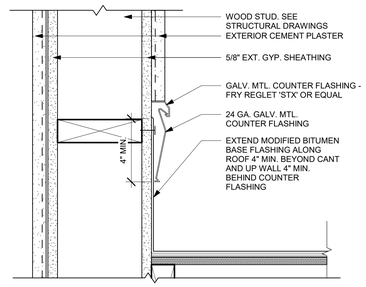

PLASTER REGLET | 3" = 1'-0" | 5

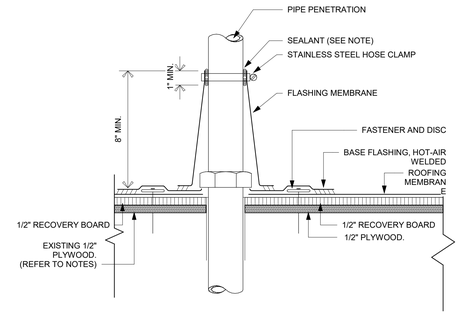

NOTES:
1) SEALANT IS A MAINTENANCE ITEM.

PIPE FLASHING | 3" = 1'-0" | 6

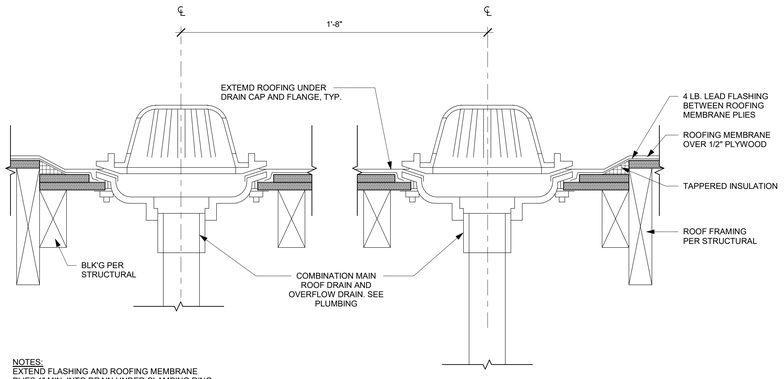

NOTES:
EXTEND FLASHING AND ROOFING MEMBRANE PLIES 1" MIN. INTO DRAIN UNDER CLAMPING RING

ROOF AND OVERFLOW DRAIN | 3" = 1'-0" | 7

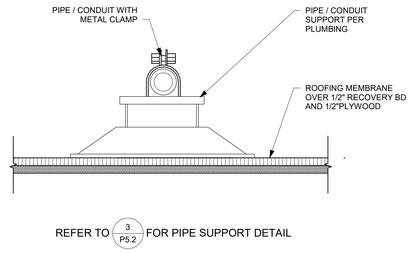

PIPE SUPPORT | 3" = 1'-0" | 8

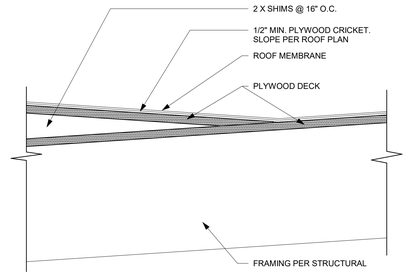

WOOD CRICKET | 3" = 1'-0" | 11

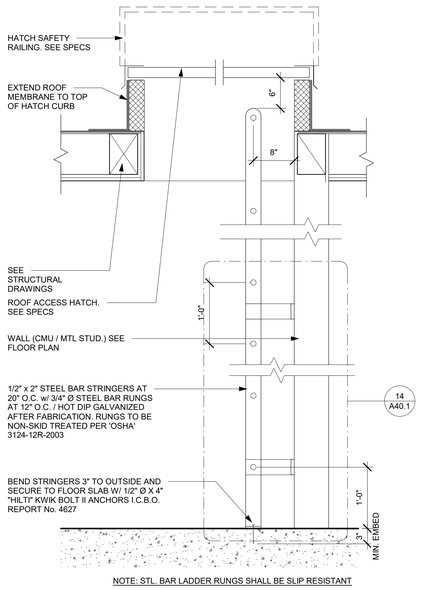

NOTE: STL. BAR LADDER RUNGS SHALL BE SLIP RESISTANT

ROOF ACCESS HATCH AND LADDER | 1" = 1'-0" | 13

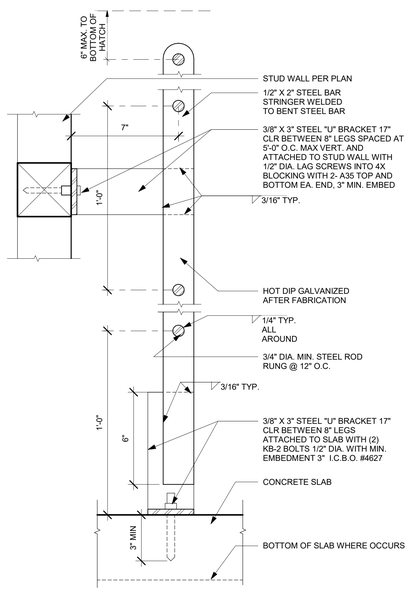

ROOF ACCESS LADDER ATTACHMENT | 3" = 1'-0" | 14

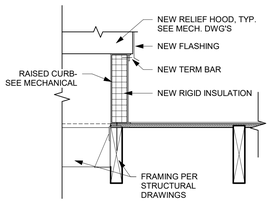

EXHAUST CURB | 1 1/2" = 1'-0" | 12

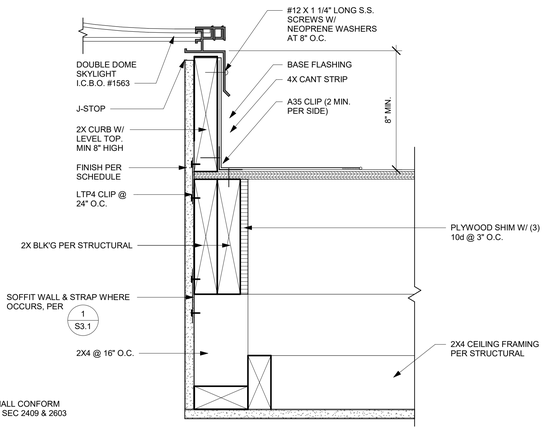

NOTE:
SKYLIGHTS SHALL CONFORM TO C.B.C. 2016 SEC 2409 & 2803

SKYLIGHT DETAIL | 3" = 1'-0" | 15

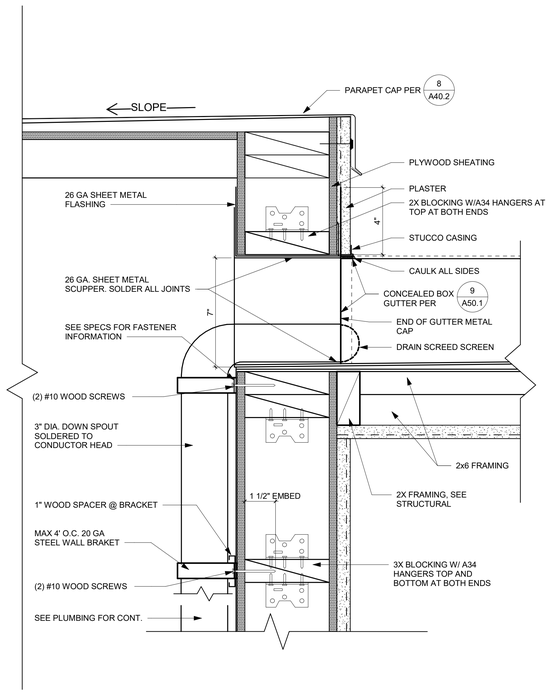

SCUPPER DETAIL | 3" = 1'-0" | 16

IDENTIFICATION STAMP
DIV. OF THE STATE ARCHITECT
APP. 04-118693 INC:
REVIEWED FOR
SS ☑ FLS ☑ ACS ☑
DATE: 03.13.2020

Revision	Date

Consultant

Engineer

studiowc
ARCHITECTURE + ENGINEERING
515 Encinitas Blvd, Ste. 201, Encinitas, California 92024
Telephone: (760) 632-8800 Fax: (760) 452-7341

LICENSED ARCHITECT
ROBERT D. WEBB
R.D.W.
C-28036
OCTOBER 31, 2021
STATE OF CALIFORNIA

CHET F. HARRITT ELEM. SCHOOL
LRC & CLASSROOM ADDITION
SANTEE SCHOOL DISTRICT

ROOF DETAILS

Drawn: Author
Checked: Checker
Date: OCTOBER 18, 2019
Job: SSD-CFH-05

A40.1

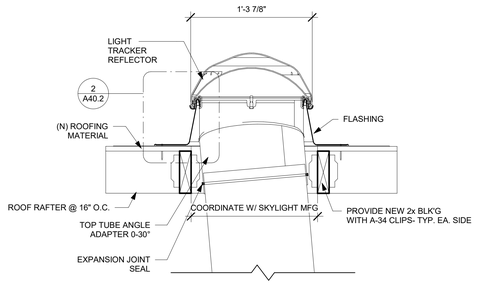

14" ROOF DETAIL @ SINGLE PLY | 1 1/2" = 1'-0" | 1

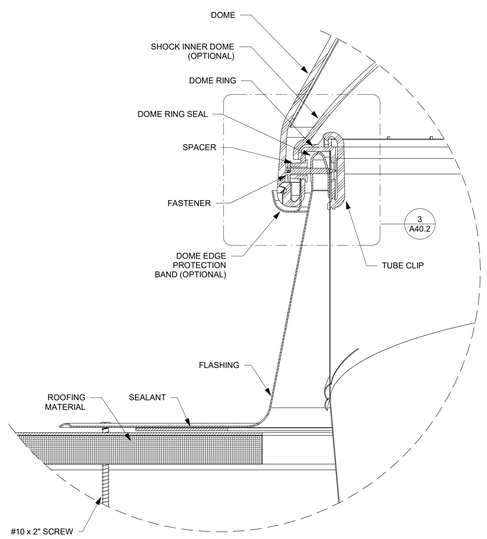

14" ROOF ATTACHMENT DTL | 3" = 1'-0" | 2

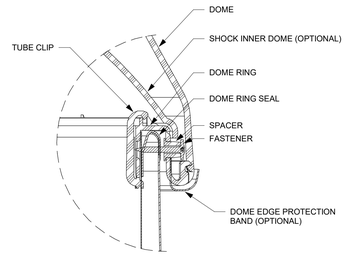

14" DOME ATTACHMENT DTL | 3" = 1'-0" | 3

NOTES:
1. LADDER WIDTH = 21-7/8" OUTSIDE DIM. & 18-3/8" INSIDE DIM.
2. ALL COMPONENTS TO BE SUPPLIED BY MANUFACTURER, EXCEPT WALL ANCHORAGE HARDWARE (CONTRACTOR FURNISHED)

PARAPET LADDER | 1" = 1'-0" | 5

BOTTOM SUPPORT

PARAPET LADDER ATTACHMENT | 1 1/2" = 1'-0" | 6

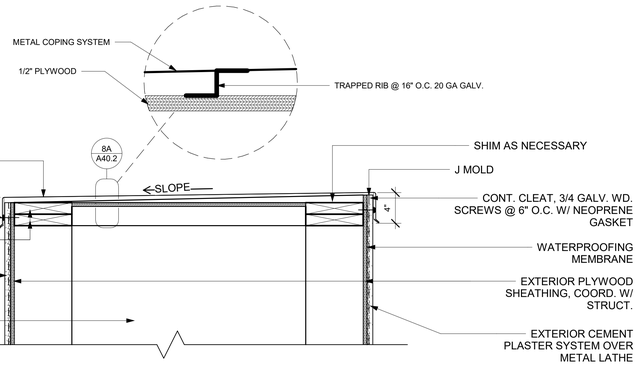

TYPICAL PARAPET DETAIL | 1 1/2" = 1'-0" | 8

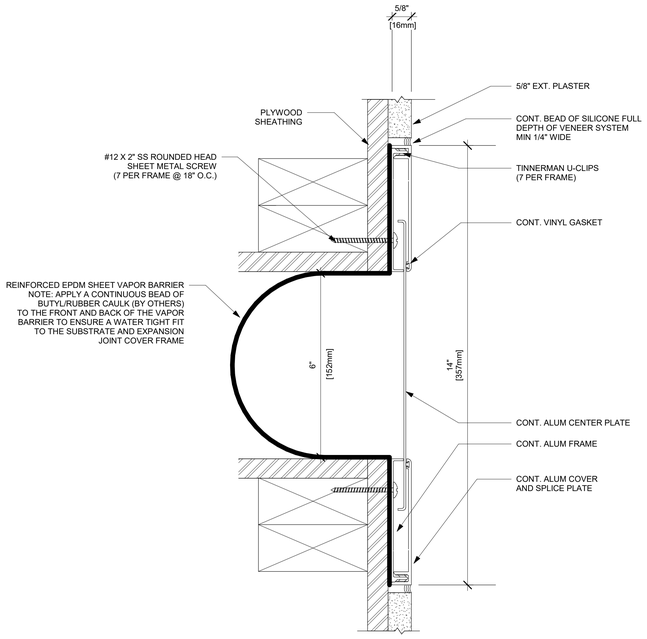

EXPANSION JOINT- CEILING /CEILING CONDITION | 6" = 1'-0" | 13

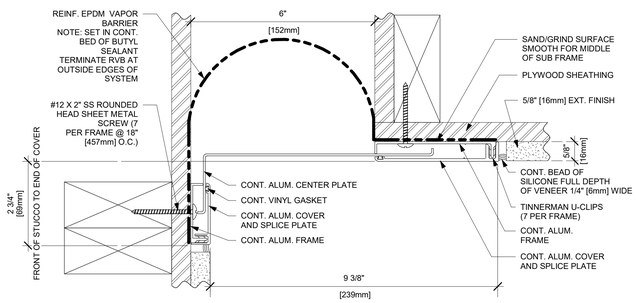

EXPANSION JOINT- WALL/WALL/CEILING CONDITION | 6" = 1'-0" | 11

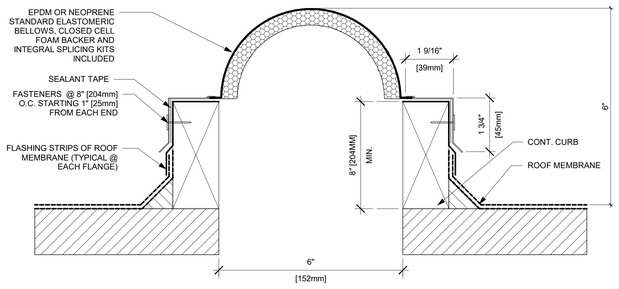

EXPANSION JOINT- ROOF/ROOF CONDITION | 6" = 1'-0" | 12

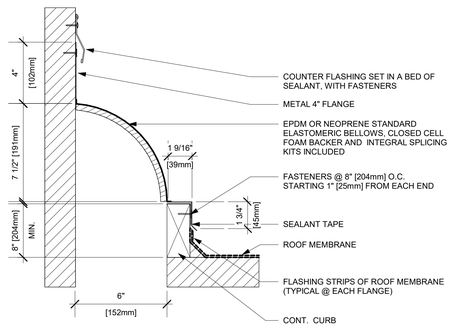

EXPANSION JOINT- ROOF/WALL CONDITION | 3" = 1'-0" | 14

IDENTIFICATION STAMP
DIV. OF THE STATE ARCHITECT
APP. 04-118693 INC:
REVIEWED FOR
SS ☑ FLS ☑ ACS ☑
DATE: 03.13.2020

Revision	Date

Consultant

Engineer

studiowc
ARCHITECTURE + ENGINEERING
515 Encinitas Blvd, Ste. 201, Encinitas, California 92024
Telephone: (760) 634-8880 Fax: (760) 452-7541

LICENSED ARCHITECT
ROBERT D. WEBB
R.D.W.
C-28036
OCTOBER 31, 2021
STATE OF CALIFORNIA

CHET F. HARRITT ELEM. SCHOOL
LRC & CLASSROOM ADDITION
SANTEE SCHOOL DISTRICT

ROOF DETAILS

Drawn: Author
Checked: Checker
Date: OCTOBER 18, 2019
Job: SSD-CFH-05

A40.2

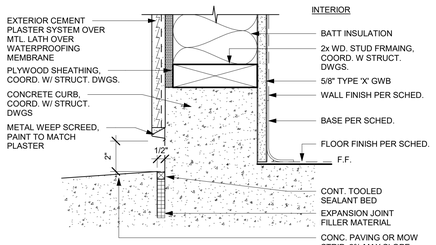

EXTERIOR WALL @ CONCRETE CURB | 3" = 1'-0" | 1

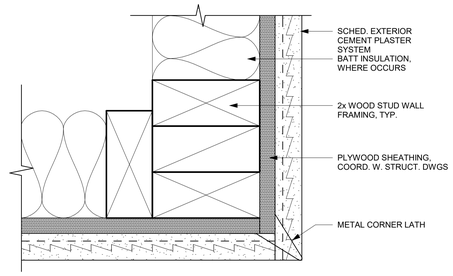

TYP. PLASTERED OUTSIDE CORNER | 6" = 1'-0" | 2

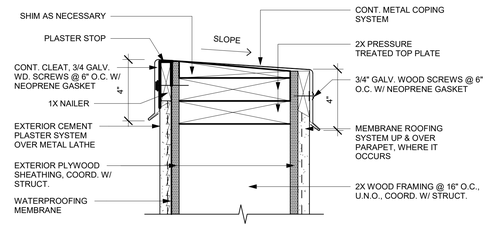

TYPICAL PARAPET DETAIL | 3" = 1'-0" | 3

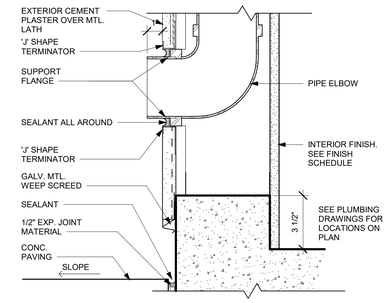

OVERFLOW DRAIN @ WALL | 3" = 1'-0" | 4

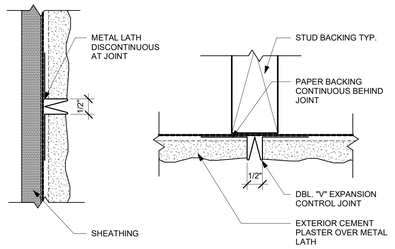

NOTE: TAPE SHALL NOT BE REMOVED UNTIL PAINTING IS COMPLETE. CLEAN JOINT AFTER TAPE IS REMOVED, TYP. AT VERTICAL AND HORIZ.

CONTROL JOINT | 6" = 1'-0" | 5

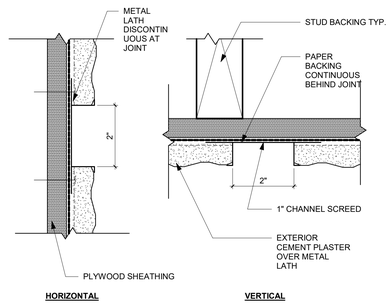

NOTE: TAPE SHALL NOT BE REMOVED UNTIL PAINTING IS COMPLETE. CLEAN JOINT AFTER TAPE IS REMOVED, TYP. AT VERTICAL AND HORIZ.

MTL PLASTER SCREED / REVEAL | 6" = 1'-0" | 6

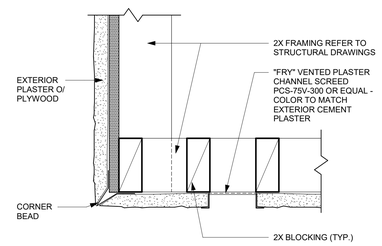

VENT SCREED | 3" = 1'-0" | 7

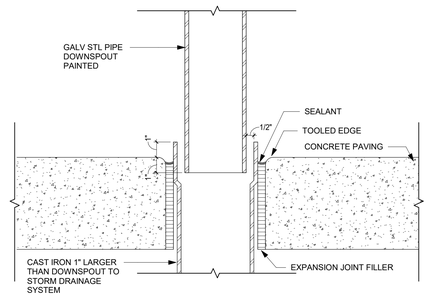

DOWNSPOUT TRANSITION | 3" = 1'-0" | 8

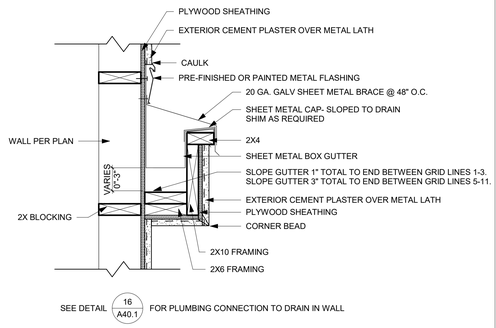

EXTERIOR- CONCEALED GUTTER AT WALL | 1 1/2" = 1'-0" | 9

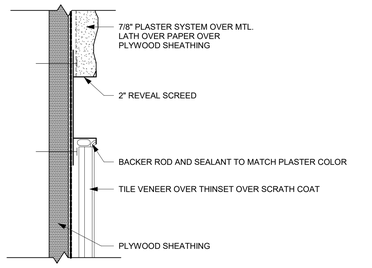

EXTERIOR- PLASTER TO TILE TRANSITION | 6" = 1'-0" | 10

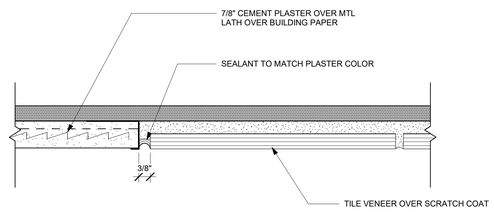

EXTERIOR- PLASTER/ TILE JOINT | 6" = 1'-0" | 11

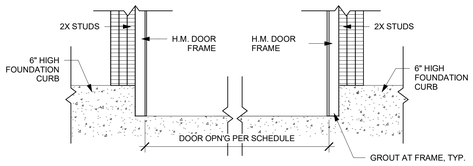

DOOR JAMB ELEVATION | 1" = 1'-0" | 12

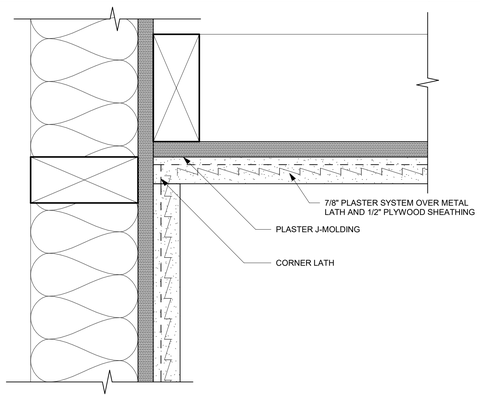

EXTERIOR- TYP. PLASTERED INSIDE CORNER | 6" = 1'-0" | 13

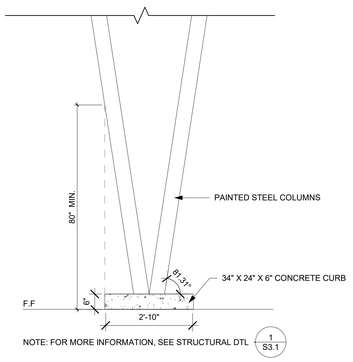

SLOPED V- ELEVATIONCOLUMN | 1/2" = 1'-0" | 14

IDENTIFICATION STAMP
DIV. OF THE STATE ARCHITECT
APP. 04-118693 INC:
REVIEWED FOR
SS ☑ FLS ☑ ACS ☑
DATE: 03.13.2020

Revision | Date

Consultant

Engineer

studiowc
ARCHITECTURE + ENGINEERING
515 Encinitas Blvd, Ste. 201, Encinitas, California 92024
Telephone: (760) 634-8880 Fax: (760) 452-7541

LICENSED ARCHITECT
ROBERT D. WEBB
C-28036
OCTOBER 31, 2021
STATE OF CALIFORNIA

CHET F. HARRITT ELEM. SCHOOL
LRC & CLASSROOM ADDITION
SANTEE SCHOOL DISTRICT

EXTERIOR BUILDING DETAILS

Drawn: Author
Checked: Checker
Date: OCTOBER 18, 2019
Job: SSD-CFH-05

A50.1

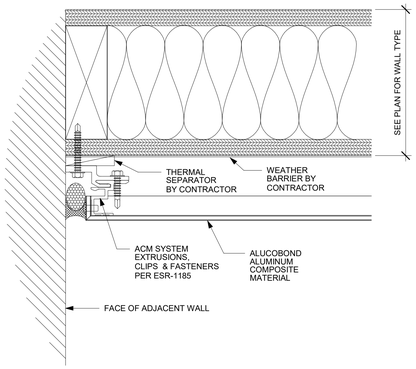

ALUCOBOND-WET SEAL SYSTEM_ENDWALL CONDITION | NTS | 1

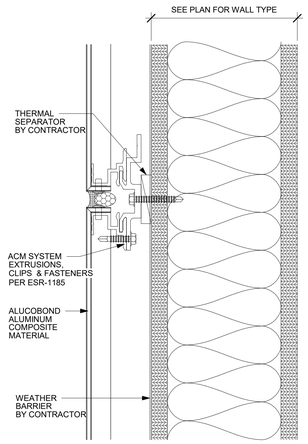

ALUCOBOND-WET SEAL SYSTEM_HORIZONTAL JOINT | NTS | 2

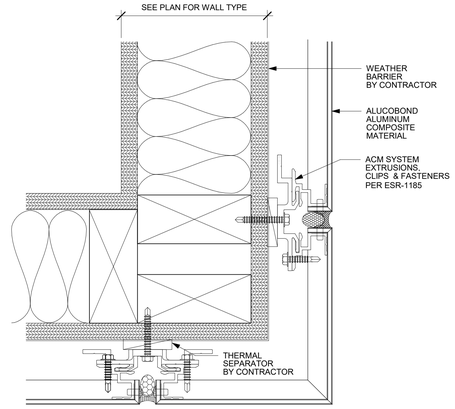

ALUCOBOND-WET SEAL SYSTEM_OUTSIDE CORNER | NTS | 3

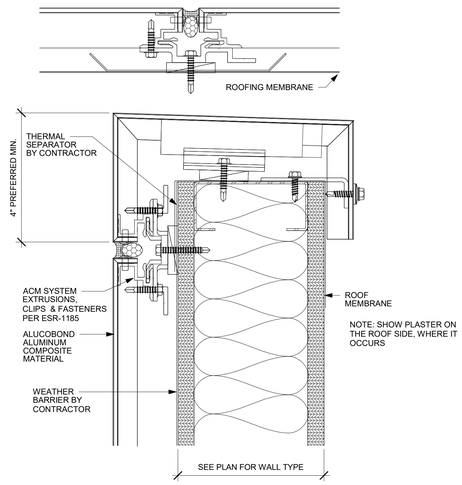

ALUCOBOND-WET SEAL SYSTEM_PARAPET CONDITION | 1/4" = 1'-0" | 4

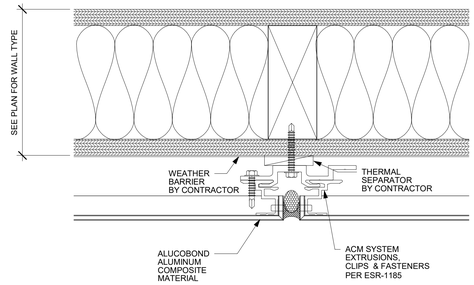

ALUCOBOND-WET SEAL SYSTEM_VERTICAL JOINT | NTS | 5

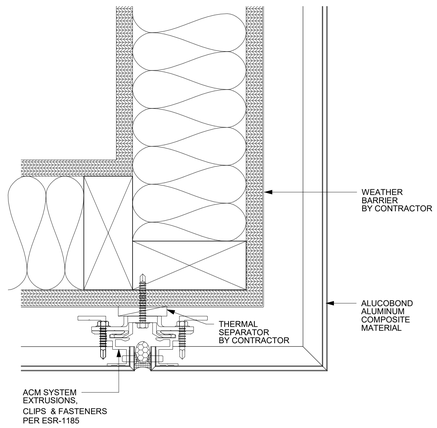

ALUCOBOND-WET SEAL SYSTEM_WALL SOFFIT TRANSITION | NTS | 6

IDENTIFICATION STAMP
DIV. OF THE STATE ARCHITECT
APP. 04-118693 INC:
REVIEWED FOR
SS ☑ FLS ☑ ACS ☑
DATE: 03.13.2020

Revison	Date

Consultant

Engineer

studiowc
ARCHITECTURE + ENGINEERING
515 Encinitas Blvd, Ste. 201, Encinitas, California 92024
Telephone: (760) 634-8880 Fax: (760) 452-7541

LICENSED ARCHITECT
ROBERT D. WEBB
R.D. Webb
C-28036
OCTOBER 31, 2021
STATE OF CALIFORNIA

CHET F. HARRITT ELEM. SCHOOL
LRC & CLASSROOM ADDITION
SANTEE SCHOOL DISTRICT

EXTERIOR BUILDING DETAILS

Drawn: Author
Checked: Checker
Date: OCTOBER 18, 2019
Job: SSD-CFH-05

A50.2

WALL SECTION KEY NOTES

901	TPO ROOFING MATERIAL PER SPECIFICATIONS
902	PLYWOOD ROOF DECK PER STRUCTURAL
903	2X ROOF JOIST PER STRUCTURAL
904	BEAM PER STRUCTURAL
905	R=30 BATT INSULATION- ROOF, TYP.
906	5/8" GYPSUM BOARD
907	SUSPENDED ACOUSTICAL CEILING SYSTEM
908	2X FIRE BLOCKING AT CEILING
909	R=19 BATT INSULATION- WALLS, TYP.
910	ROOF CRICKET
912	7/8" LATH AND PLASTER OVER PLYWOOD SHEATHING- THICKNESS TO MATCH ADJACENT SHEAR WALL, SEE STRUCTURAL
914	CONCRETE FOUNDATION PER STRUCTURAL
915	CONCRETE HARDSCAPE PER CIVIL AND ARCH SITE PLANS
916	CONCRETE FLOOR SLAB PER STRUCTURAL
917	FINISH FLOOR MATERIAL PER SCHEDULE
918	4" BASE MATERIAL PER SCHEDULE
920	PARAPET CAP
921	CONCEALED GUTTER SYSTEM
923	PLASTER REVEAL
924	VENT SCREED
928	1/2" EXPANSION JOINT FILLER
929	FUTURE TRANSLUCENT CANOPY
930	WEEP SCREED

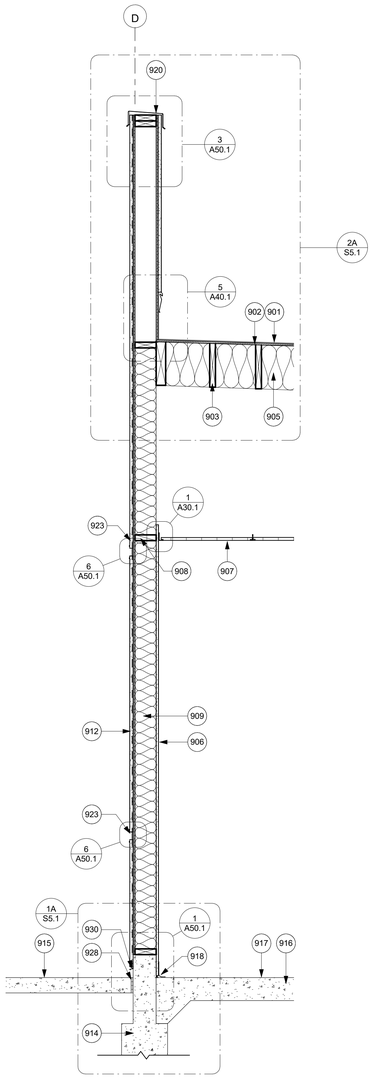

WALL SECTION 1 | 3/4" = 1'-0" | 1

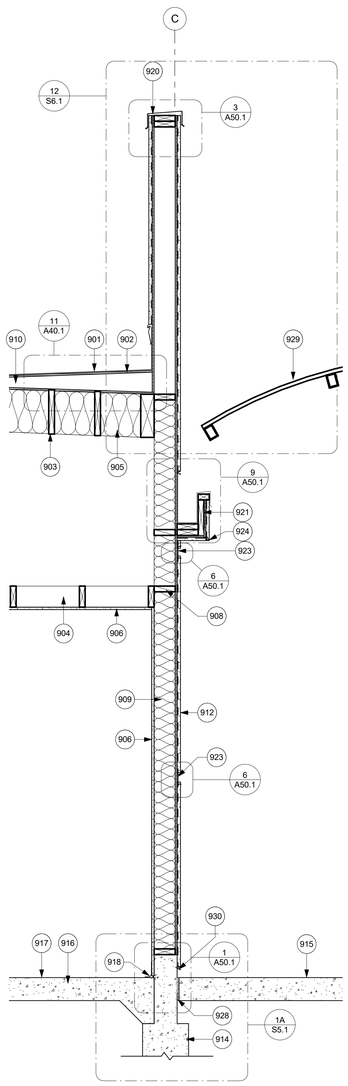

WALL SECTION 2 | 3/4" = 1'-0" | 2

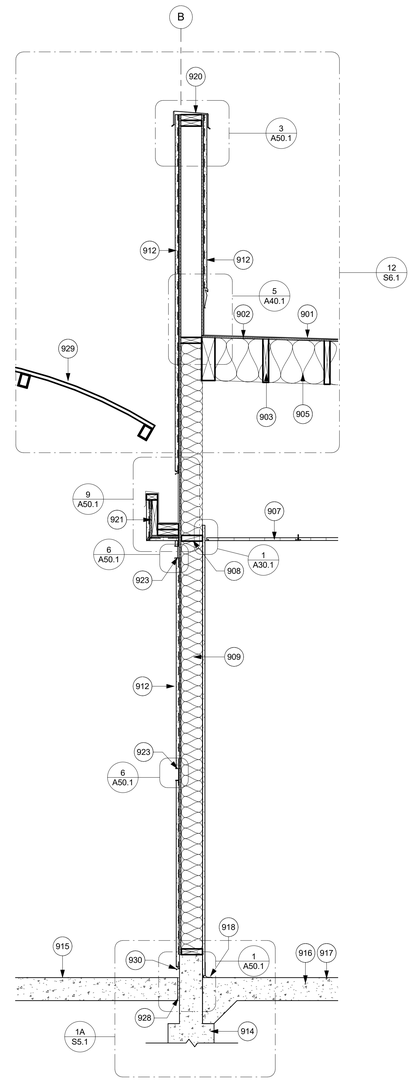

WALL SECTION 3 | 3/4" = 1'-0" | 3

IDENTIFICATION STAMP
DIV. OF THE STATE ARCHITECT
APP. 04-118693 INC:
REVIEWED FOR
SS ☑ FLS ☑ ACS ☑
DATE: 03.13.2020

Revison	Date

Consultant

Engineer

studiowc
ARCHITECTURE + ENGINEERING
515 Encinitas Blvd, Ste. 201, Encinitas, California 92024
Telephone: (760) 634-8880 Fax: (760) 452-7541

LICENSED ARCHITECT
ROBERT D. WEBB
R.D.W.
C-28036
OCTOBER 31, 2020
STATE OF CALIFORNIA

CHET F. HARRITT ELEM. SCHOOL
LRC & CLASSROOM ADDITION
SANTEE SCHOOL DISTRICT

WALL SECTIONS

Drawn: Author
Checked: Checker
Date: OCTOBER 18, 2019
Job: SSD-CFH-05

A60.1

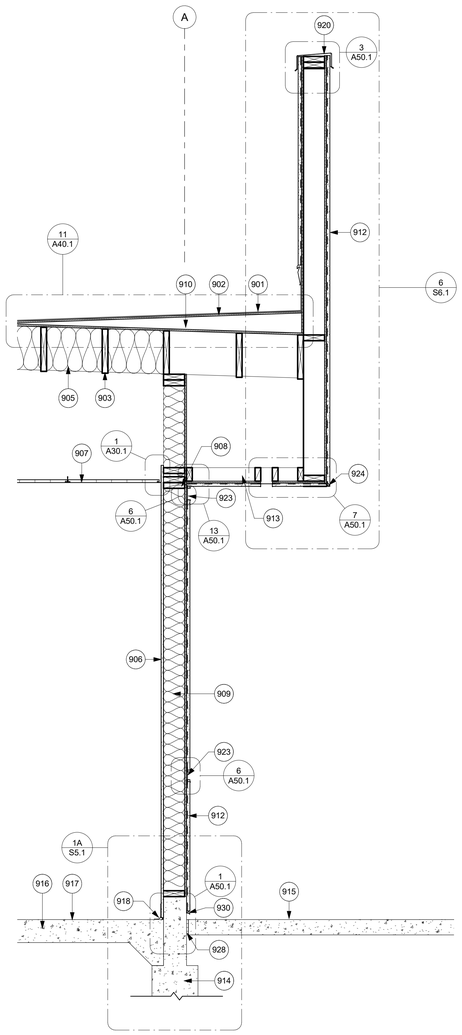

WALL SECTION 4 | 3/4" = 1'-0" | 1

WALL SECTION 5 | 3/4" = 1'-0" | 2

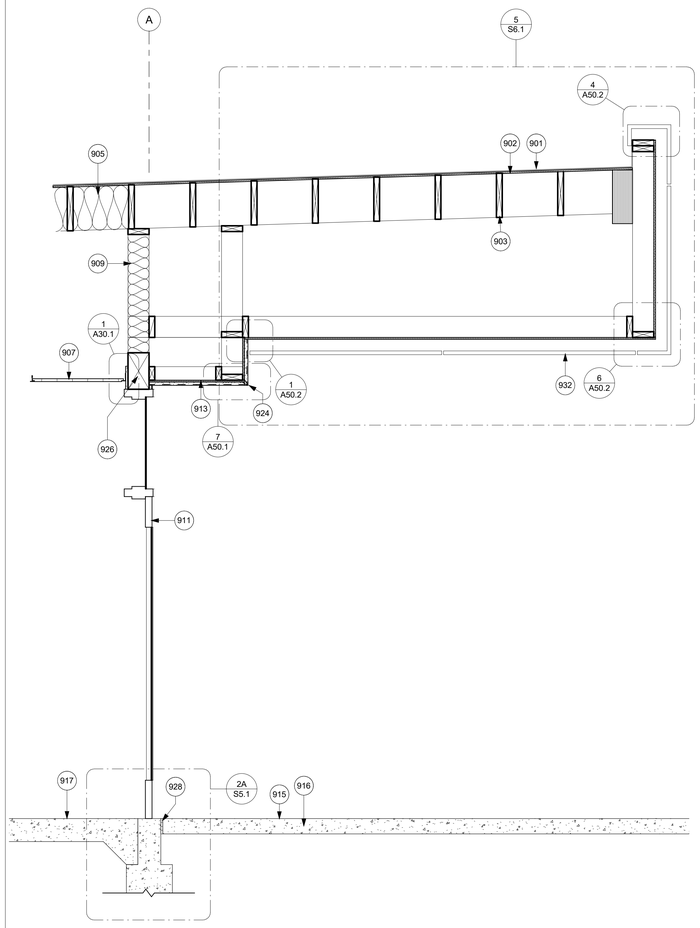

WALL SECTION 6 | 3/4" = 1'-0" | 3

WALL SECTION KEY NOTES

901	TPO ROOFING MATERIAL PER SPECIFICATIONS
902	PLYWOOD ROOF DECK PER STRUCTURAL
903	2X ROOF JOIST PER STRUCTURAL
905	R=30 BATT INSULATION- ROOF, TYP.
906	5/8" GYPSUM BOARD
907	SUSPENDED ACOUSTICAL CEILING SYSTEM
908	2X FIRE BLOCKING AT CEILING
909	R=19 BATT INSULATION- WALLS, TYP.
910	ROOF CRICKET
911	HOLLOW METAL FRAME PER SCHEDULE
912	7/8" LATH AND PLASTER OVER PLYWOOD SHEATHING- THICKNESS TO MATCH ADJACENT SHEAR WALL, SEE STRUCTURAL
913	LATH AND PLASTER SOFFIT
914	CONCRETE FOUNDATION PER STRUCTURAL
915	CONCRETE HARDSCAPE PER CIVIL AND ARCH SITE PLANS
916	CONCRETE FLOOR SLAB PER STRUCTURAL
917	FINISH FLOOR MATERIAL PER SCHEDULE
918	4" BASE MATERIAL PER SCHEDULE
920	PARAPET CAP
923	PLASTER REVEAL
924	VENT SCREED
926	HEADER PER STRUCTURAL
928	1/2" EXPANSION JOINT FILLER
930	WEEP SCREED
932	ALUMINUM COMPOSITE CLADDING, SEE DETAILS IN A50.2

IDENTIFICATION STAMP
DIV. OF THE STATE ARCHITECT
APP. 04-118693 INC:
REVIEWED FOR
SS ☑ FLS ☑ ACS ☑
DATE: 03.13.2020

Revison	Date

Consultant

Engineer

studiowc
ARCHITECTURE + ENGINEERING
515 Encinitas Blvd, Ste. 201, Encinitas, California 92024
Telephone: (760) 634-8880 Fax: (760) 452-7541

LICENSED ARCHITECT
ROBERT D. WEBB
C-28036
OCTOBER 31, 2020
STATE OF CALIFORNIA

CHET F. HARRITT ELEM. SCHOOL
LRC & CLASSROOM ADDITION
SANTEE SCHOOL DISTRICT

WALL SECTIONS

Drawn: Author
Checked: Checker
Date: OCTOBER 18, 2019
Job: SSD-CFH-05

A60.2

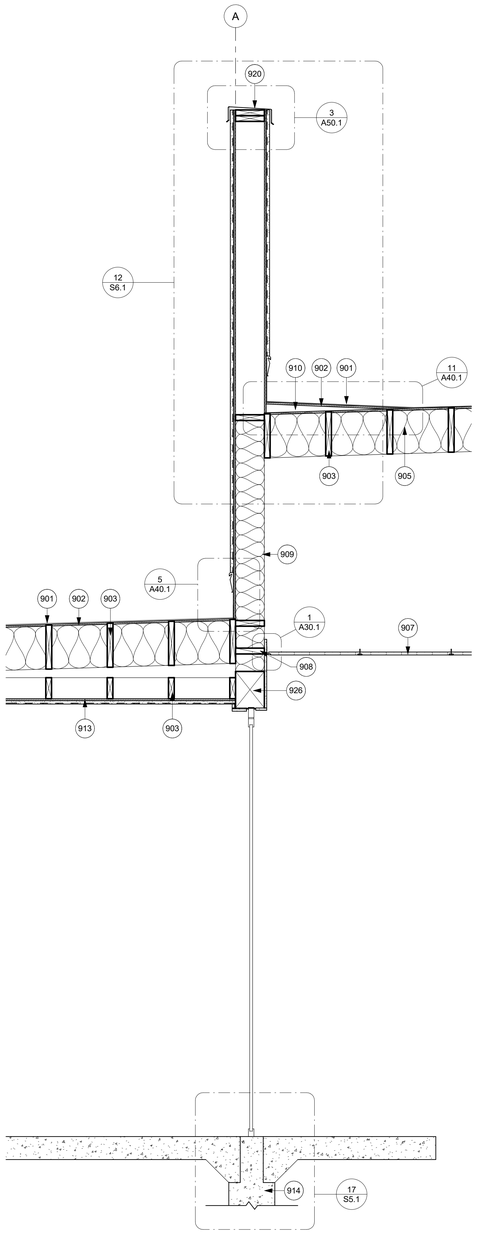

WALL SECTION 7 | 3/4" = 1'-0" | 1

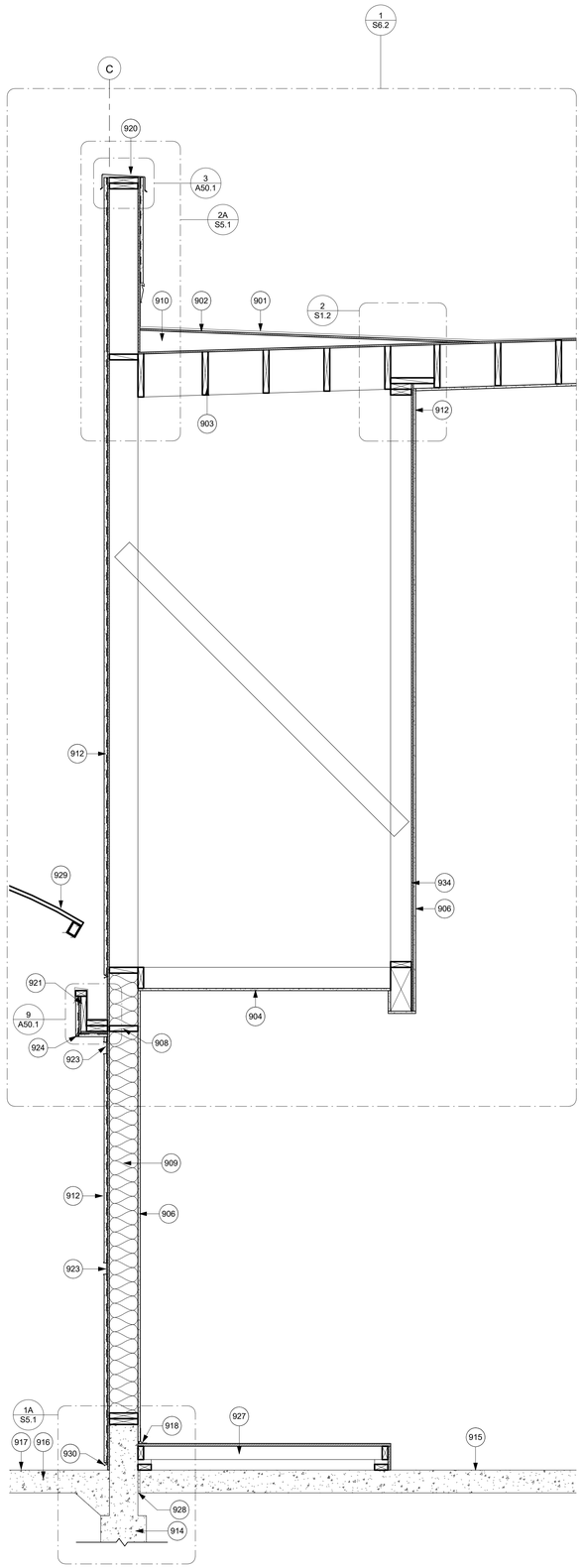

WALL SECTION 8 | 3/4" = 1'-0" | 2

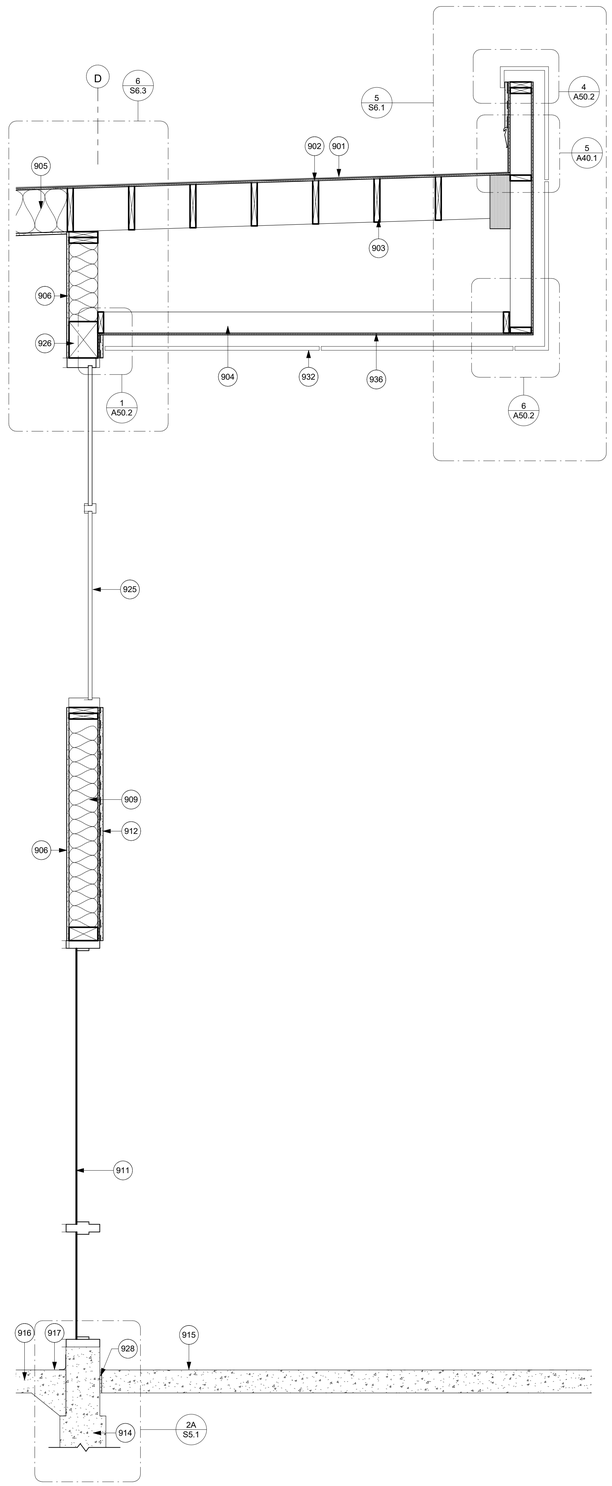

WALL SECTION 9 | 3/4" = 1'-0" | 3

WALL SECTION KEY NOTES

901	TPO ROOFING MATERIAL PER SPECIFICATIONS
902	PLYWOOD ROOF DECK PER STRUCTURAL
903	2X ROOF JOIST PER STRUCTURAL
904	BEAM PER STRUCTURAL
905	R=30 BATT INSULATION- ROOF, TYP.
906	5/8" GYPSUM BOARD
907	SUSPENDED ACOUSTICAL CEILING SYSTEM
908	2X FIRE BLOCKING AT CEILING
909	R=19 BATT INSULATION- WALLS, TYP.
910	ROOF CRICKET
911	HOLLOW METAL FRAME PER SCHEDULE
912	7/8" LATH AND PLASTER OVER PLYWOOD SHEATHING- THICKNESS TO MATCH ADJACENT SHEAR WALL, SEE STRUCTURAL
913	LATH AND PLASTER SOFFIT
914	CONCRETE FOUNDATION PER STRUCTURAL
915	CONCRETE HARDSCAPE PER CIVIL AND ARCH SITE PLANS
916	CONCRETE FLOOR SLAB PER STRUCTURAL
917	FINISH FLOOR MATERIAL PER SCHEDULE
918	4" BASE MATERIAL PER SCHEDULE
920	PARAPET CAP
921	CONCEALED GUTTER SYSTEM
923	PLASTER REVEAL
924	VENT SCREED
925	ALUMINUM CURTAIN WALL SYSTEM PER DEFERRED APPROVAL
926	HEADER PER STRUCTURAL
927	RAISED READING STEP
928	1/2" EXPANSION JOINT FILLER
929	FUTURE TRANSLUCENT CANOPY
930	WEEP SCREED
932	ALUMINUM COMPOSITE CLADDING, SEE DETAILS IN A50.2
934	1/2" PLYWOOD SHEATHING
936	PLYWOOD SOFFIT

IDENTIFICATION STAMP
DIV. OF THE STATE ARCHITECT
APP. 04-118693 INC:
REVIEWED FOR
SS ☑ FLS ☑ ACS ☑
DATE: 03.13.2020

Revison	Date

Consultant

Engineer

studiowc
ARCHITECTURE + ENGINEERING
515 Encinitas Blvd, Ste. 201, Encinitas, California 92024
Telephone: (760) 632-8800 Fax: (760) 452-7541

LICENSED ARCHITECT
ROBERT D. WEBB
C-28036
OCTOBER 31, 2021
STATE OF CALIFORNIA

CHET F. HARRITT ELEM. SCHOOL
LRC & CLASSROOM ADDITION
SANTEE SCHOOL DISTRICT

WALL SECTIONS

Drawn: Author
Checked: Checker
Date: OCTOBER 18, 2019
Job: SSD-CFH-05

A60.3

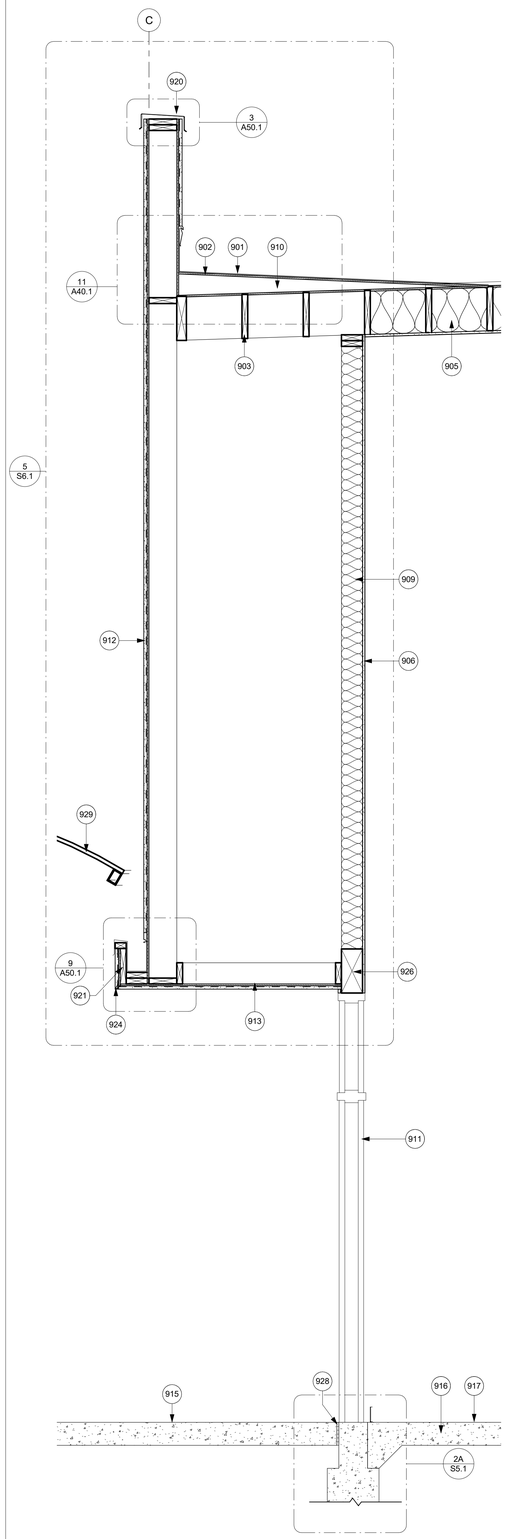

WALL SECTION 10 | 3/4" = 1'-0" | 1

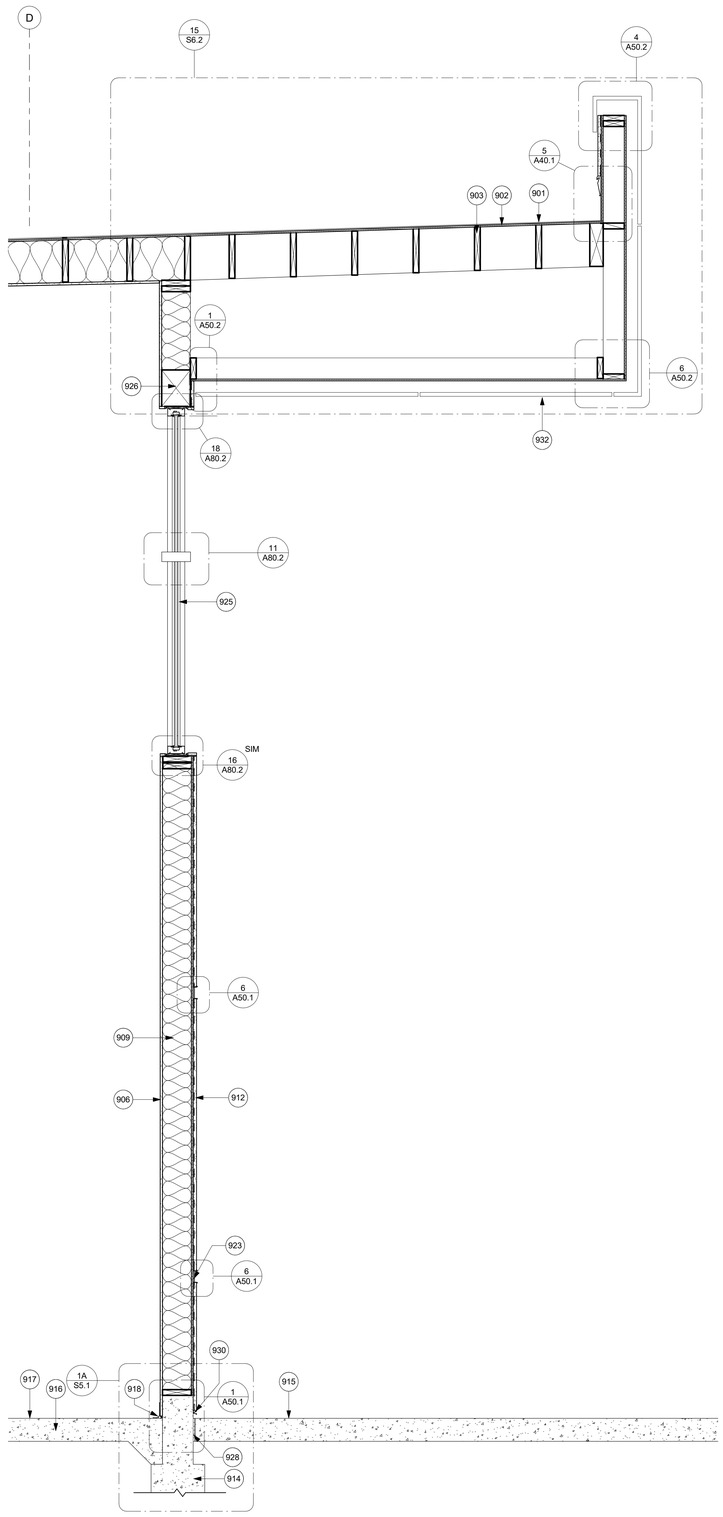

WALL SECTION 11 | 3/4" = 1'-0" | 2

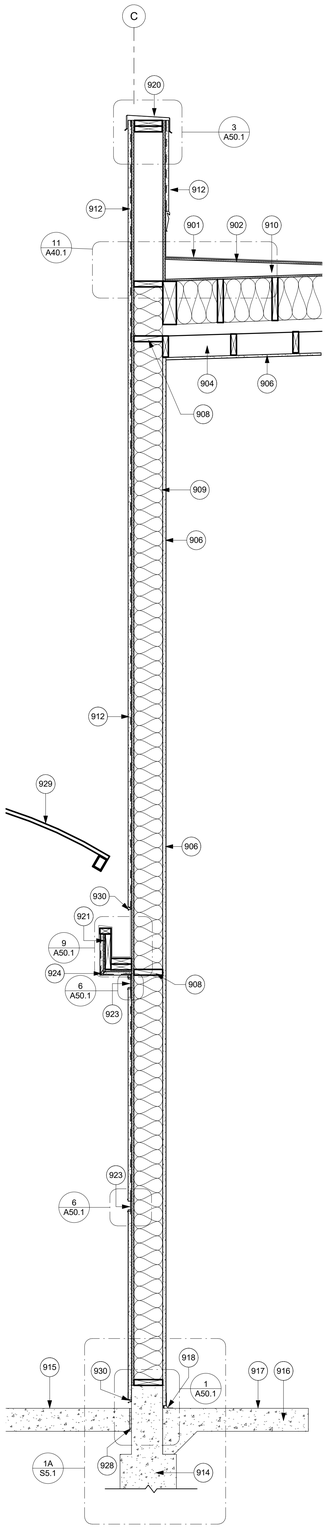

WALL SECTION 12 | 3/4" = 1'-0" | 3

WALL SECTION KEY NOTES

901	TPO ROOFING MATERIAL PER SPECIFICATIONS
902	PLYWOOD ROOF DECK PER STRUCTURAL
903	2X ROOF JOIST PER STRUCTURAL
904	BEAM PER STRUCTURAL
905	R=30 BATT INSULATION- ROOF, TYP.
906	5/8" GYPSUM BOARD
908	2X FIRE BLOCKING AT CEILING
909	R=19 BATT INSULATION- WALLS, TYP.
910	ROOF CRICKET
911	HOLLOW METAL FRAME PER SCHEDULE
912	7/8" LATH AND PLASTER OVER PLYWOOD SHEATHING- THICKNESS TO MATCH ADJACENT SHEAR WALL, SEE STRUCTURAL
913	LATH AND PLASTER SOFFIT
914	CONCRETE FOUNDATION PER STRUCTURAL
915	CONCRETE HARDSCAPE PER CIVIL AND ARCH SITE PLANS
916	CONCRETE FLOOR SLAB PER STRUCTURAL
917	FINISH FLOOR MATERIAL PER SCHEDULE
918	4" BASE MATERIAL PER SCHEDULE
920	PARAPET CAP
921	CONCEALED GUTTER SYSTEM
923	PLASTER REVEAL
924	VENT SCREED
925	ALUMINUM CURTAIN WALL SYSTEM PER DEFERRED APPROVAL
926	HEADER PER STRUCTURAL
928	1/2" EXPANSION JOINT FILLER
929	FUTURE TRANSLUCENT CANOPY
930	WEEP SCREED
932	ALUMINUM COMPOSITE CLADDING, OVER 1/2" PLYWOOD SEE DETAILS IN A50.2

IDENTIFICATION STAMP
DIV. OF THE STATE ARCHITECT
APP. 04-118693 INC:
REVIEWED FOR
SS ☑ FLS ☑ ACS ☑
DATE: 03.13.2020

Revision	Date

Consultant

Engineer

studiowc
ARCHITECTURE + ENGINEERING
515 Encinitas Blvd, Ste. 201, Encinitas, California 92024
Telephone: (760) 632-8800 Fax: (760) 452-7341

LICENSED ARCHITECT
ROBERT D. WEBB
C-28036
OCTOBER 31, 2021
STATE OF CALIFORNIA

CHET F. HARRITT ELEM. SCHOOL
LRC & CLASSROOM ADDITION
SANTEE SCHOOL DISTRICT

WALL SECTIONS

Drawn: Author
Checked: Checker
Date: OCTOBER 18, 2019
Job: SSD-CFH-05

A60.4

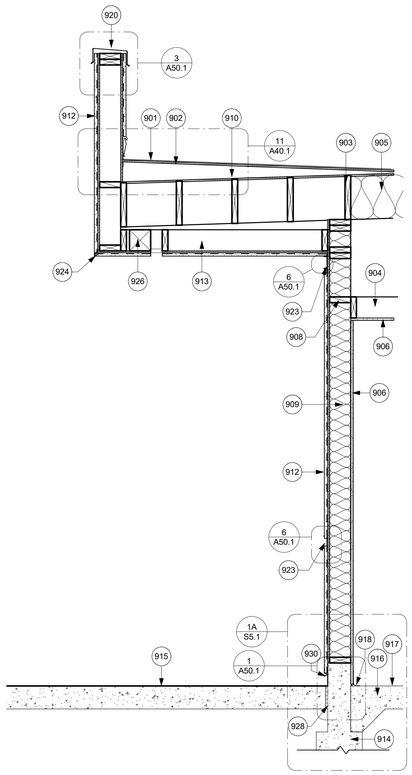

WALL SECTION 13 | 3/4" = 1'-0" | 1

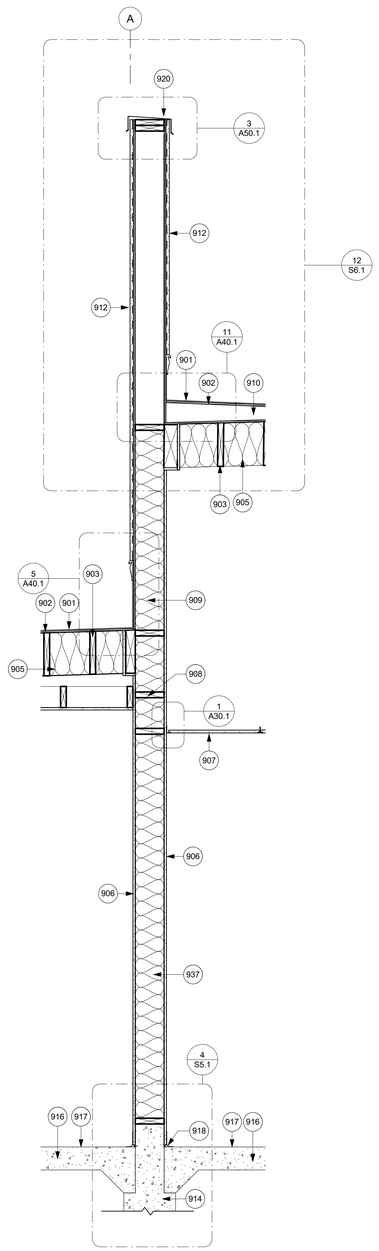

WALL SECTION 14 | 3/4" = 1'-0" | 2

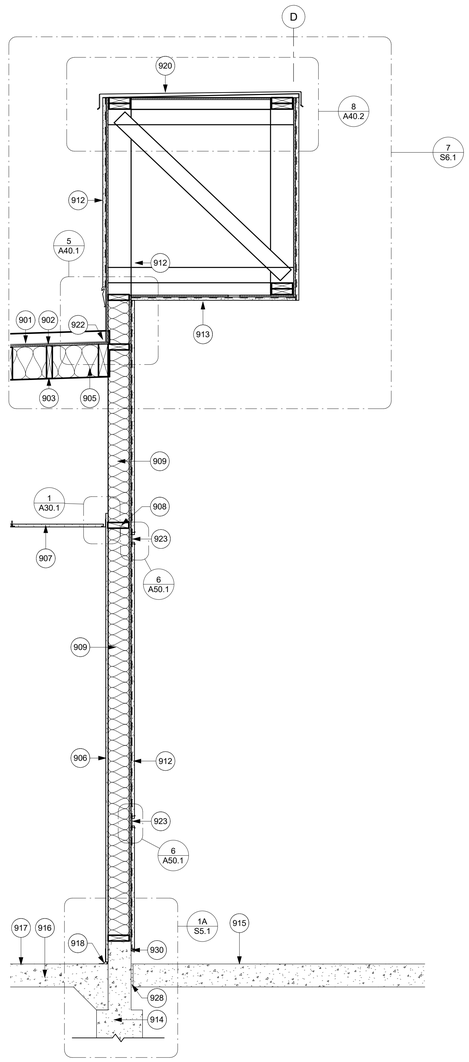

WALL SECTION 15 | 3/4" = 1'-0" | 3

WALL SECTION KEY NOTES

901	TPO ROOFING MATERIAL PER SPECIFICATIONS
902	PLYWOOD ROOF DECK PER STRUCTURAL
903	2X ROOF JOIST PER STRUCTURAL
904	BEAM PER STRUCTURAL
905	R=30 BATT INSULATION- ROOF, TYP.
906	5/8" GYPSUM BOARD
907	SUSPENDED ACOUSTICAL CEILING SYSTEM
908	2X FIRE BLOCKING AT CEILING
909	R=19 BATT INSULATION- WALLS, TYP.
910	ROOF CRICKET
912	7/8" LATH AND PLASTER OVER PLYWOOD SHEATHING- THICKNESS TO MATCH ADJACENT SHEAR WALL, SEE STRUCTURAL
913	LATH AND PLASTER SOFFIT
914	CONCRETE FOUNDATION PER STRUCTURAL
915	CONCRETE HARDSCAPE PER CIVIL AND ARCH SITE PLANS
916	CONCRETE FLOOR SLAB PER STRUCTURAL
917	FINISH FLOOR MATERIAL PER SCHEDULE
918	4" BASE MATERIAL PER SCHEDULE
920	PARAPET CAP
922	CANT STRIP
923	PLASTER REVEAL
924	VENT SCREED
926	HEADER PER STRUCTURAL
928	1/2" EXPANSION JOINT FILLER
930	WEEP SCREED
937	1 HR RATED WALL

IDENTIFICATION STAMP
DIV. OF THE STATE ARCHITECT
APP. 04-118693 INC:
REVIEWED FOR
SS ☑ FLS ☑ ACS ☑
DATE: 03.13.2020

Revison	Date

Consultant

Engineer

studiowc
ARCHITECTURE + ENGINEERING
515 Encinitas Blvd, Ste. 201, Encinitas, California 92024
Telephone: (760) 632-8800 Fax: (760) 452-7541

LICENSED ARCHITECT
ROBERT D. WEBB
C-28036
STATE OF CALIFORNIA
OCTOBER 31, 2021

CHET F. HARRITT ELEM. SCHOOL
LRC & CLASSROOM ADDITION
SANTEE SCHOOL DISTRICT

WALL SECTIONS

Drawn: Author
Checked: Checker
Date: OCTOBER 18, 2019
Job: SSD-CFH-05

A60.5

WALL SECTION KEY NOTES

901	TPO ROOFING MATERIAL PER SPECIFICATIONS
902	PLYWOOD ROOF DECK PER STRUCTURAL
903	2X ROOF JOIST PER STRUCTURAL
904	BEAM PER STRUCTURAL
905	R=30 BATT INSULATION- ROOF, TYP.
906	5/8" GYPSUM BOARD
907	SUSPENDED ACOUSTICAL CEILING SYSTEM
908	2X FIRE BLOCKING AT CEILING
909	R=19 BATT INSULATION- WALLS, TYP.
912	7/8" LATH AND PLASTER OVER PLYWOOD SHEATHING- THICKNESS TO MATCH ADJACENT SHEAR WALL, SEE STRUCTURAL
914	CONCRETE FOUNDATION PER STRUCTURAL
916	CONCRETE FLOOR SLAB PER STRUCTURAL
917	FINISH FLOOR MATERIAL PER SCHEDULE
918	4" BASE MATERIAL PER SCHEDULE
920	PARAPET CAP
926	HEADER PER STRUCTURAL
933	OPERABLE WALL PER SCHEDULE
935	2X BLOCKING

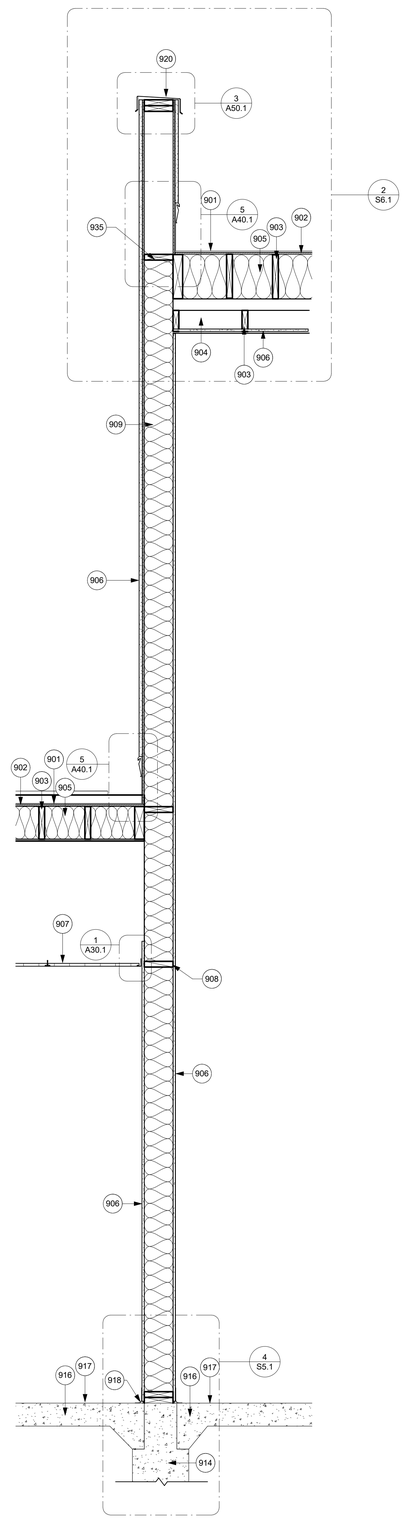

WALL SECTION 16 | 3/4" = 1'-0" | 1

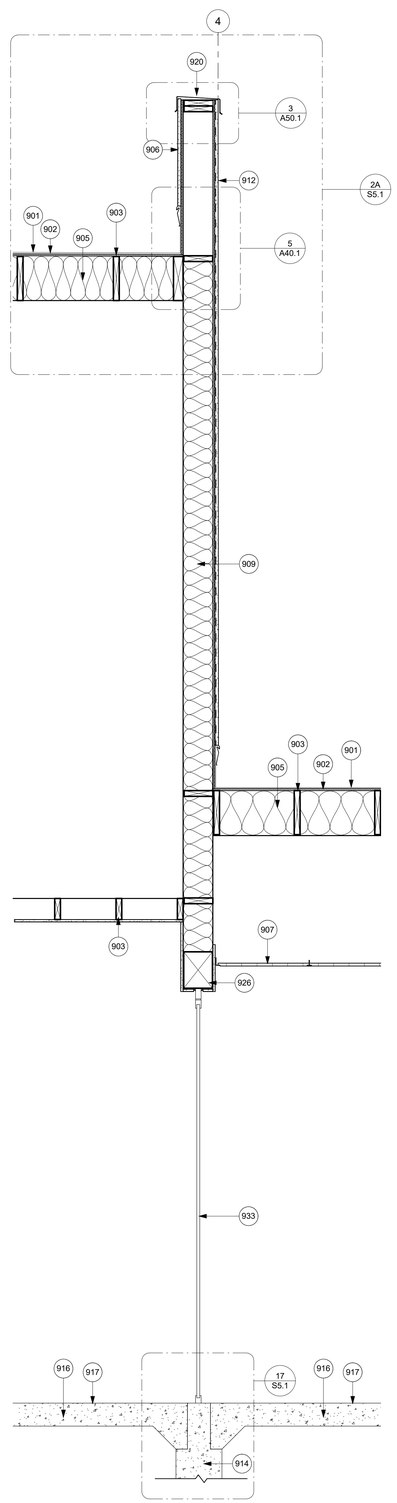

WALL SECTION 17 | 3/4" = 1'-0" | 2

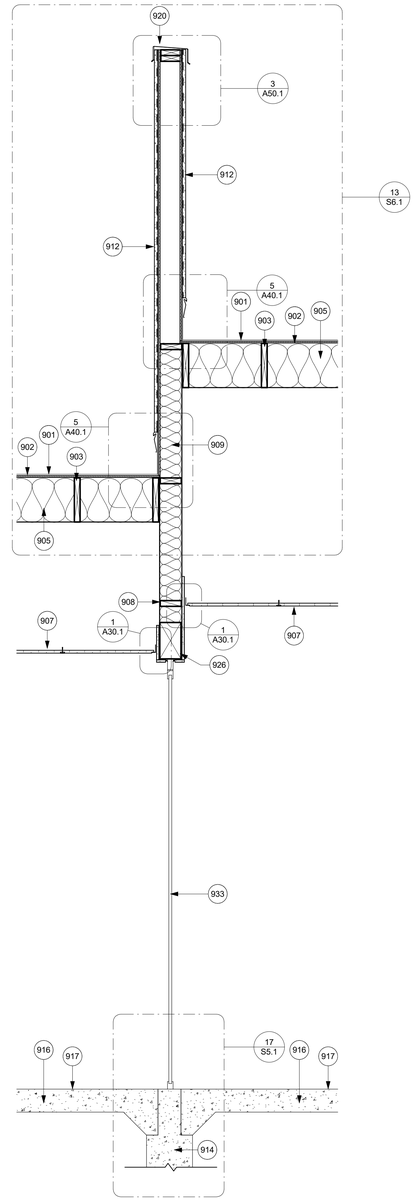

WALL SECTION 18 | 3/4" = 1'-0" | 3

IDENTIFICATION STAMP
DIV. OF THE STATE ARCHITECT
APP. 04-118693 INC:
REVIEWED FOR
SS ☑ FLS ☑ ACS ☑
DATE: 03.13.2020

Revison	Date

Consultant

Engineer

studiowc
ARCHITECTURE + ENGINEERING
515 Encinitas Blvd, Ste. 201, Encinitas, California 92024
Telephone: (760) 632-8800 Fax: (760) 452-7541

LICENSED ARCHITECT
ROBERT D. WEBB
C-28036
OCTOBER 31, 2021
STATE OF CALIFORNIA

CHET F. HARRITT ELEM. SCHOOL
LRC & CLASSROOM ADDITION
SANTEE SCHOOL DISTRICT

WALL SECTIONS

Drawn: Author
Checked: Checker
Date: OCTOBER 18, 2019
Job: SSD-CFH-05

A60.6

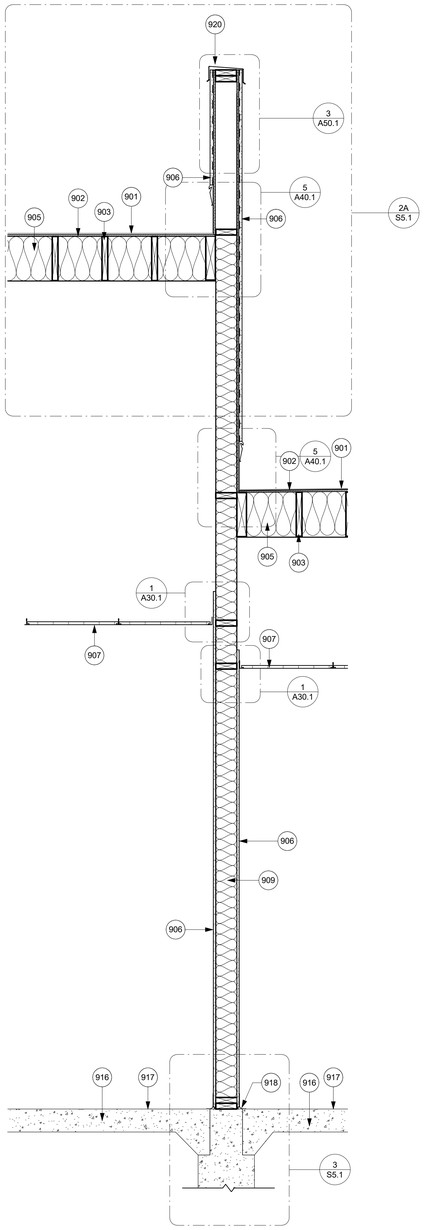

WALL SECTION 19 | 3/4" = 1'-0" | 1

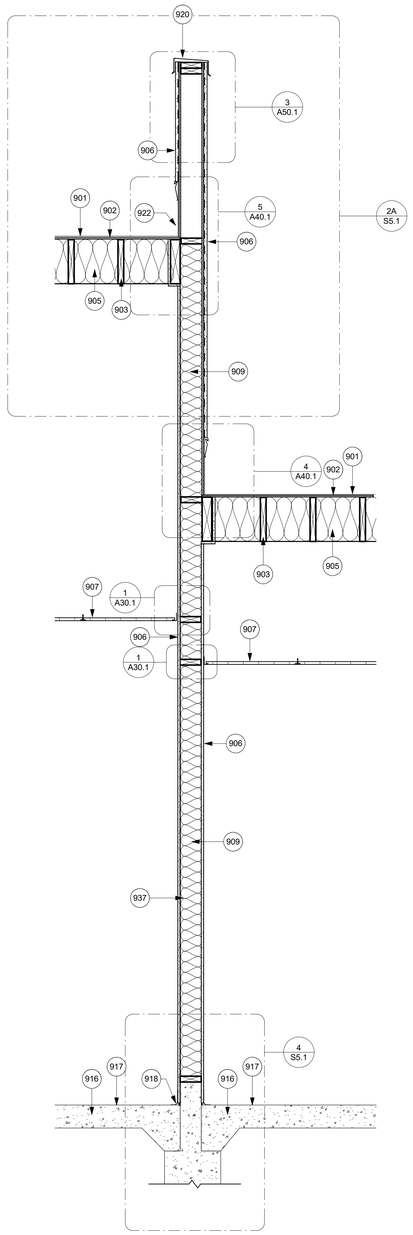

WALL SECTION 20 | 3/4" = 1'-0" | 2

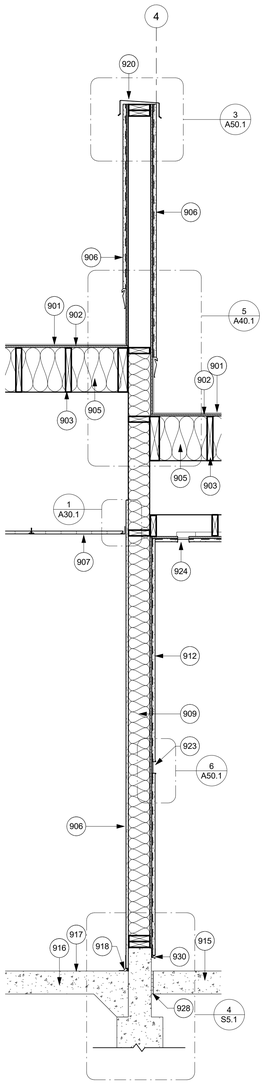

WALL SECTION 21 | 3/4" = 1'-0" | 3

WALL SECTION KEY NOTES

901	TPO ROOFING MATERIAL PER SPECIFICATIONS
902	PLYWOOD ROOF DECK PER STRUCTURAL
903	2X ROOF JOIST PER STRUCTURAL
905	R=30 BATT INSULATION- ROOF, TYP.
906	5/8" GYPSUM BOARD
907	SUSPENDED ACOUSTICAL CEILING SYSTEM
909	R=19 BATT INSULATION- WALLS, TYP.
912	7/8" LATH AND PLASTER OVER PLYWOOD SHEATHING- THICKNESS TO MATCH ADJACENT SHEAR WALL SEE STRUCTURAL
915	CONCRETE HARDSCAPE PER CIVIL AND ARCH SITE PLANS
916	CONCRETE FLOOR SLAB PER STRUCTURAL
917	FINISH FLOOR MATERIAL PER SCHEDULE
918	4" BASE MATERIAL PER SCHEDULE
920	PARAPET CAP
922	CANT STRIP
923	PLASTER REVEAL
924	VENT SCREED
928	1/2" EXPANSION JOINT FILLER
930	WEEP SCREED
937	1 HR RATED WALL

IDENTIFICATION STAMP
DIV. OF THE STATE ARCHITECT
APP. 04-118693 INC:
REVIEWED FOR
SS ☑ FLS ☑ ACS ☑
DATE: 03.13.2020

Revison	Date

Consultant

Engineer

studiowc
ARCHITECTURE + ENGINEERING
515 Encinitas Blvd, Ste. 201, Encinitas, California 92024
Telephone: (760) 634-8880 Fax: (760) 452-7541

LICENSED ARCHITECT
ROBERT D. WEBB
R.D.W.
C-28036
OCTOBER 31, 2020
STATE OF CALIFORNIA

CHET F. HARRITT ELEM. SCHOOL
LRC & CLASSROOM ADDITION
SANTEE SCHOOL DISTRICT

WALL SECTIONS

Drawn: Author
Checked: Checker
Date: OCTOBER 18, 2019
Job: SSD-CFH-05

A60.7

WALL SECTION KEY NOTES

901	TPO ROOFING MATERIAL PER SPECIFICATIONS
902	PLYWOOD ROOF DECK PER STRUCTURAL
903	2X ROOF JOIST PER STRUCTURAL
905	R=30 BATT INSULATION- ROOF, TYP.
906	5/8" GYPSUM BOARD
907	SUSPENDED ACOUSTICAL CEILING SYSTEM
908	2X FIRE BLOCKING AT CEILING
909	R=19 BATT INSULATION- WALLS, TYP.
911	HOLLOW METAL FRAME PER SCHEDULE
912	7/8" LATH AND PLASTER OVER PLYWOOD SHEATHING- THICKNESS TO MATCH ADJACENT SHEAR WALL, SEE STRUCTURAL
913	LATH AND PLASTER SOFFIT
914	CONCRETE FOUNDATION PER STRUCTURAL
915	CONCRETE HARDSCAPE PER CIVIL AND ARCH SITE PLANS
916	CONCRETE FLOOR SLAB PER STRUCTURAL
917	FINISH FLOOR MATERIAL PER SCHEDULE
918	4" BASE MATERIAL PER SCHEDULE
920	PARAPET CAP
924	VENT SCREED
928	1/2" EXPANSION JOINT FILLER
929	FUTURE TRANSLUCENT CANOPY
938	CERAMIC TILE

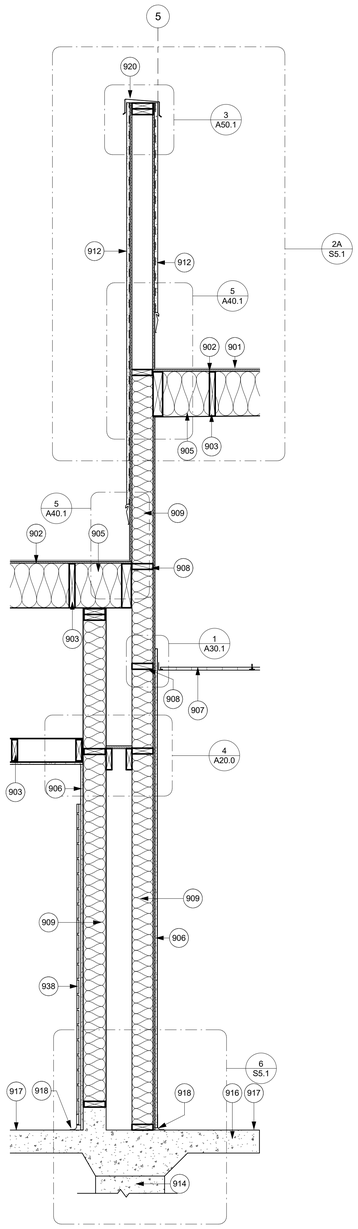

WALL SECTION 22 | 3/4" = 1'-0" | 1

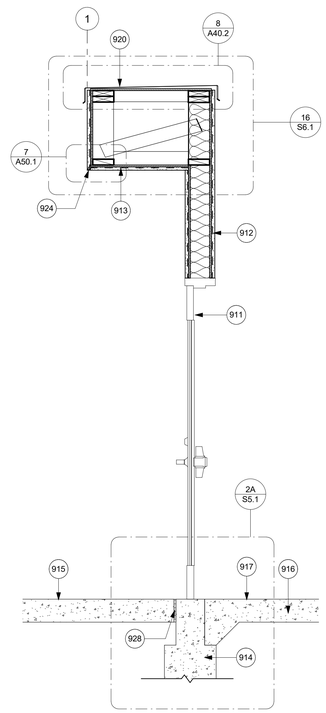

WALL SECTION 23 | 3/4" = 1'-0" | 2

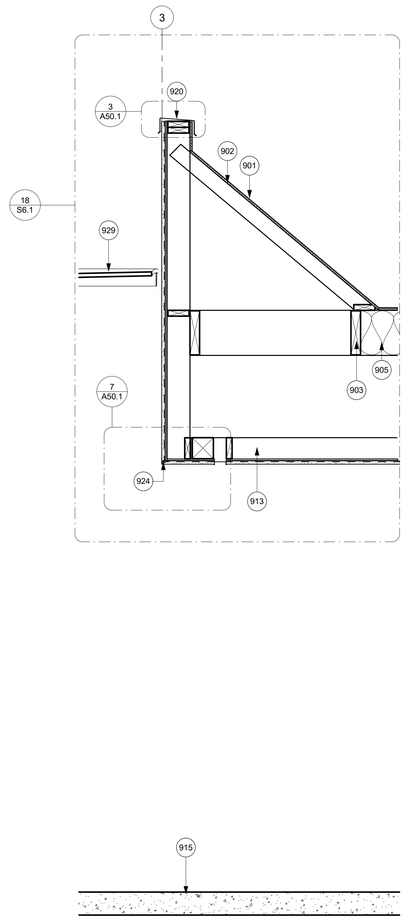

WALL SECTION 24 | 3/4" = 1'-0" | 3

IDENTIFICATION STAMP
DIV. OF THE STATE ARCHITECT
APP. 04-118693 INC:
REVIEWED FOR
SS ☑ FLS ☑ ACS ☑
DATE: 03.13.2020

Revison	Date

Consultant

Engineer

studiowc
ARCHITECTURE + ENGINEERING
515 Encinitas Blvd, Ste. 201, Encinitas, California 92024
Telephone: (760) 634-8880 Fax: (760) 452-7541

LICENSED ARCHITECT
ROBERT D. WEBB
C-28036
OCTOBER 31, 2021
STATE OF CALIFORNIA

CHET F. HARRITT ELEM. SCHOOL
LRC & CLASSROOM ADDITION
SANTEE SCHOOL DISTRICT

WALL SECTIONS

Drawn: Author
Checked: Checker
Date: OCTOBER 18, 2019
Job: SSD-CFH-05

A60.8

WALL SECTION KEY NOTES

901	TPO ROOFING MATERIAL PER SPECIFICATIONS
902	PLYWOOD ROOF DECK PER STRUCTURAL
903	2X ROOF JOIST PER STRUCTURAL
905	R=30 BATT INSULATION- ROOF, TYP.
906	5/8" GYPSUM BOARD
907	SUSPENDED ACOUSTICAL CEILING SYSTEM
908	2X FIRE BLOCKING AT CEILING
909	R=19 BATT INSULATION- WALLS, TYP.
912	7/8" LATH AND PLASTER OVER PLYWOOD SHEATHING- THICKNESS TO MATCH ADJACENT SHEAR WALL, SEE STRUCTURAL
913	LATH AND PLASTER SOFFIT
914	CONCRETE FOUNDATION PER STRUCTURAL
915	CONCRETE HARDSCAPE PER CIVIL AND ARCH SITE PLANS
916	CONCRETE FLOOR SLAB PER STRUCTURAL
917	FINISH FLOOR MATERIAL PER SCHEDULE
918	4" BASE MATERIAL PER SCHEDULE
920	PARAPET CAP
923	PLASTER REVEAL
924	VENT SCREED
926	HEADER PER STRUCTURAL
928	1/2" EXPANSION JOINT FILLER
930	WEEP SCREED
933	OPERABLE WALL PER SCHEDULE
938	CERAMIC TILE

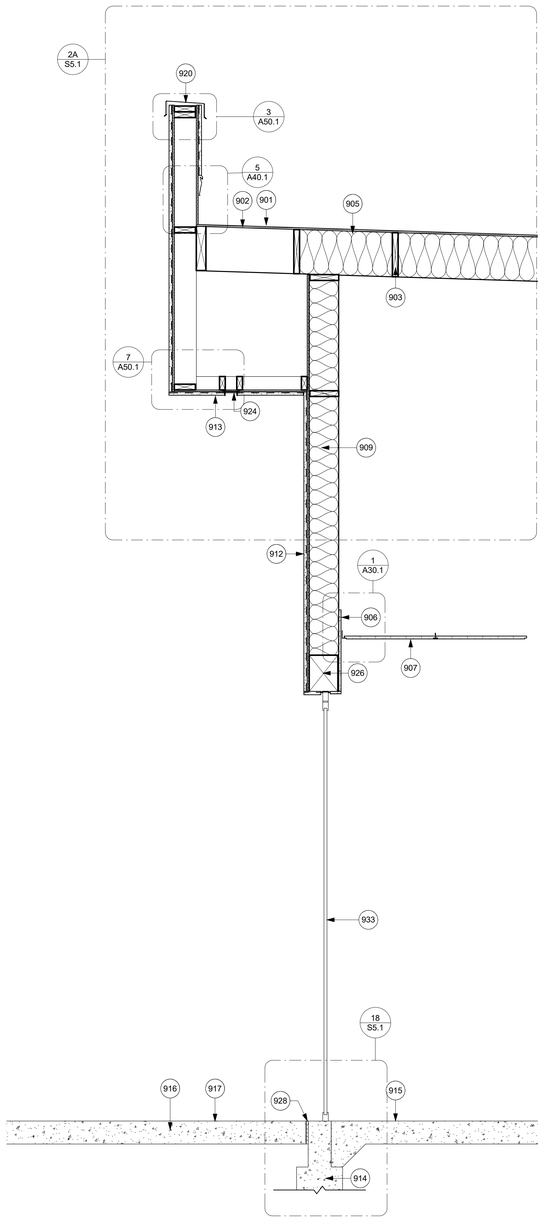

WALL SECTION 25 | 3/4" = 1'-0" | 1

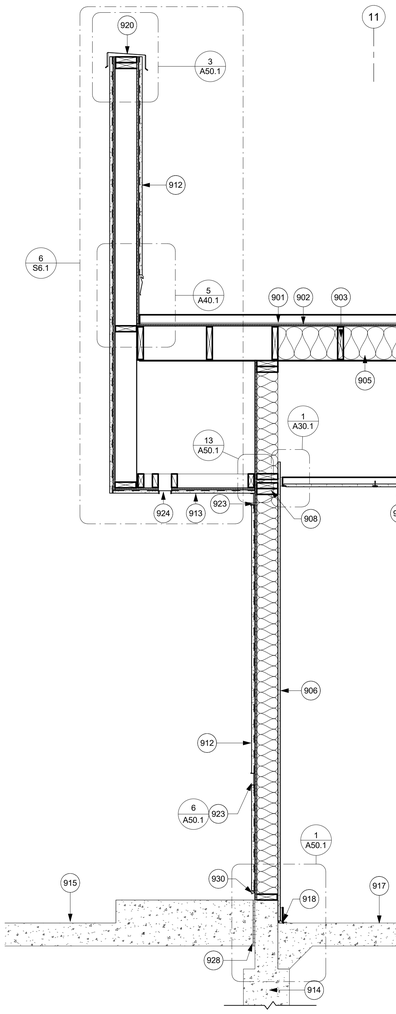

WALL SECTION 26 | 3/4" = 1'-0" | 2

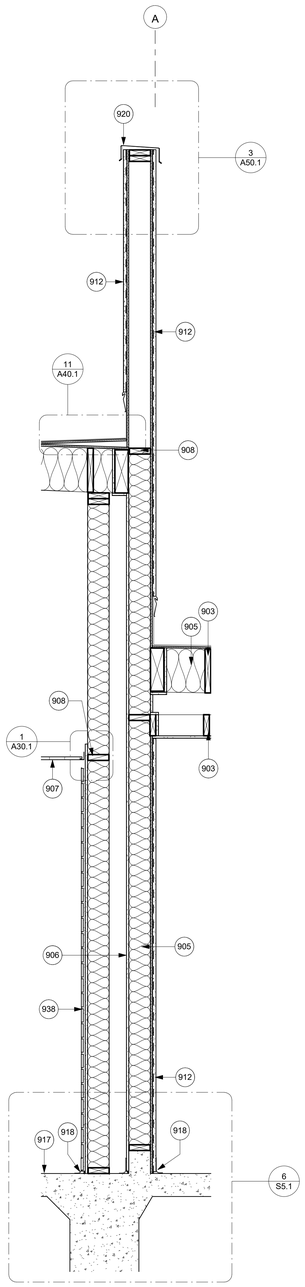

WALL SECTION 27 | 3/4" = 1'-0" | 3

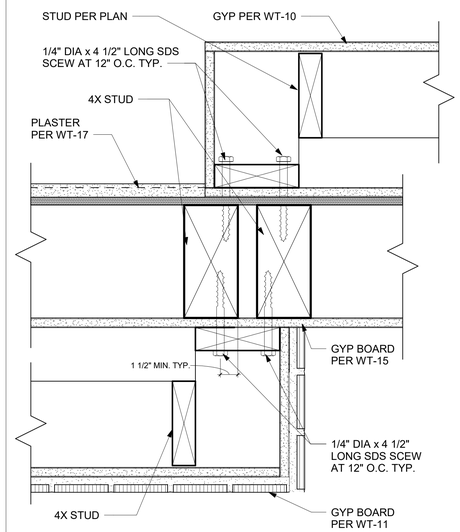

CONNECTION TO 1HR WALL | 3" = 1'-0" | 4

IDENTIFICATION STAMP
DIV. OF THE STATE ARCHITECT
APP. 04-118693 INC:
REVIEWED FOR
SS ☑ FLS ☑ ACS ☑
DATE: 03.13.2020

Revison	Date

Consultant

Engineer

studiowc
ARCHITECTURE + ENGINEERING
515 Encinitas Blvd, Ste. 201, Encinitas, California 92024
Telephone: (760) 634-8880 Fax: (760) 452-7541

LICENSED ARCHITECT
ROBERT D. WEBB
C-28036
OCTOBER 31, 2020
STATE OF CALIFORNIA

CHET F. HARRITT ELEM. SCHOOL
LRC & CLASSROOM ADDITION
SANTEE SCHOOL DISTRICT

WALL SECTIONS

Drawn: Author
Checked: Checker
Date: OCTOBER 18, 2019
Job: SSD-CFH-05

A60.9

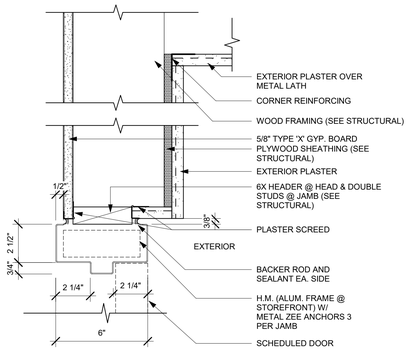

EXTERIOR DOOR HEAD @SOFFIT | 3" = 1'-0" | 5

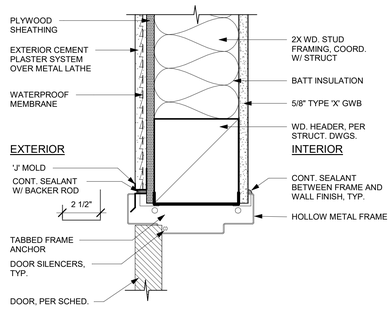

EXT. H.M. DOOR - HEAD | 3" = 1'-0" | 2

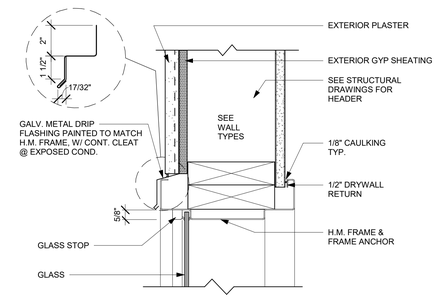

EXTERIOR WINDOW HEAD | 3" = 1'-0" | 8

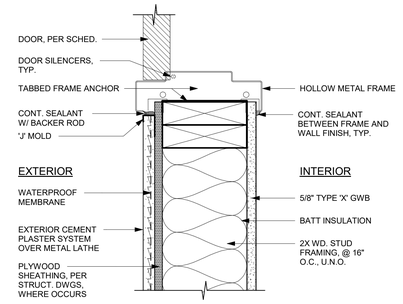

EXT. H.M. DOOR -JAMB | 3" = 1'-0" | 3

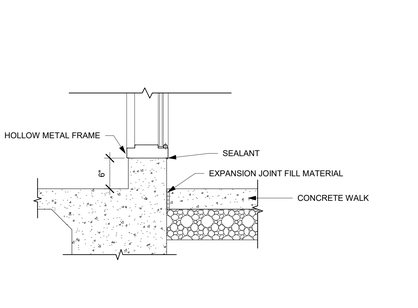

EXTERIOR DOOR THRESHOLD | 6" = 1'-0" | 7

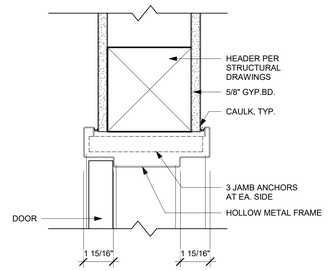

INT. DOOR HEAD | 3" = 1'-0" | 6

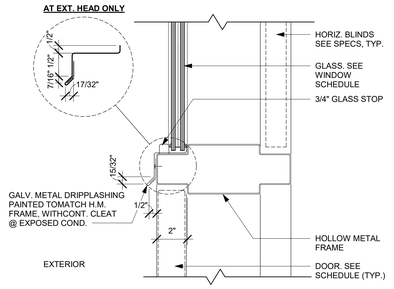

DOOR WINDOW MULLION | 3" = 1'-0" | 4

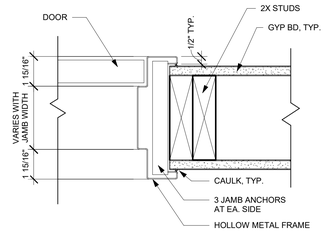

INT. DOOR JAMB | 3" = 1'-0" | 9

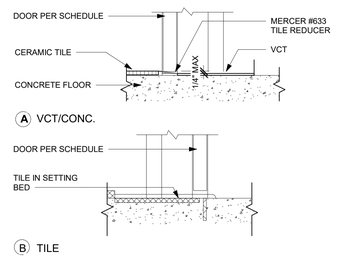

INTERIOR DOOR THRESHOLD | 3" = 1'-0" | 1

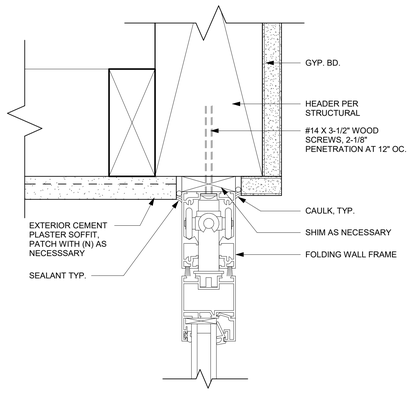

FOLDING WALL- EXTERIOR HEAD | 6" = 1'-0" | 10

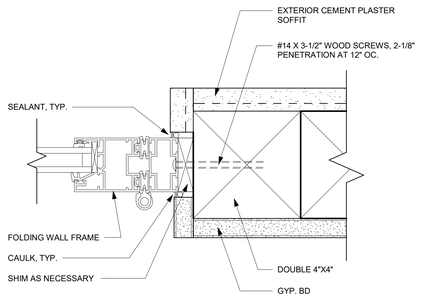

FOLDING WALL- EXTERIOR JAMB | 6" = 1'-0" | 11

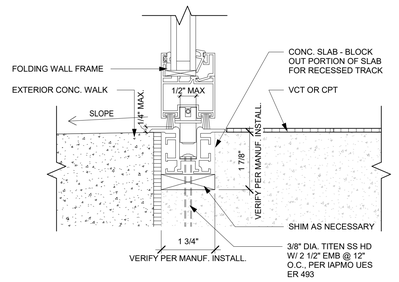

FOLDING WALL- EXTERIOR SILL | 6" = 1'-0" | 12

EXTERIOR WINDOW SILL | 1" = 1'-0" | 13

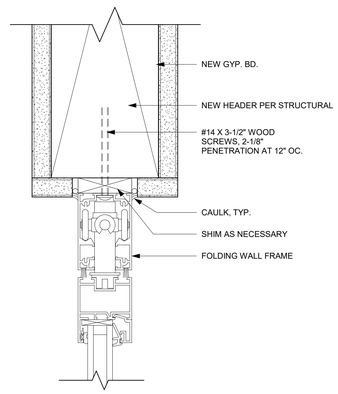

FOLDING WALL- INTERIOR HEAD | 6" = 1'-0" | 14

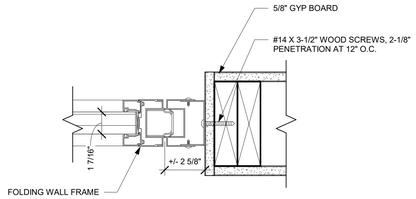

FOLDING WALL- INTERIOR JAMB | 3" = 1'-0" | 15

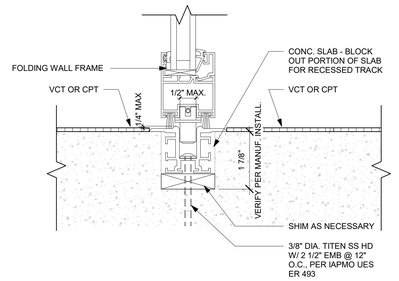

FOLDING WALL- INTERIOR SILL | 6" = 1'-0" | 16

IDENTIFICATION STAMP
DIV. OF THE STATE ARCHITECT
APP. 04-118693 INC:
REVIEWED FOR
SS ☑ FLS ☑ ACS ☑
DATE: 03.13.2020

Revision	Date

Consultant

Engineer

studiowc
ARCHITECTURE + ENGINEERING
515 Encinitas Blvd, Ste. 201, Encinitas, California 92024
Telephone: (760) 634-8880 Fax: (760) 452-7341

LICENSED ARCHITECT
ROBERT D. WEBB
C-28036
OCTOBER 31, 2020
STATE OF CALIFORNIA

CHET F. HARRITT ELEM. SCHOOL
LRC & CLASSROOM ADDITION
SANTEE SCHOOL DISTRICT

OPENING DETAILS

Drawn: Author
Checked: Checker
Date: OCTOBER 18, 2019
Job: SSD-CFH-05

A80.1

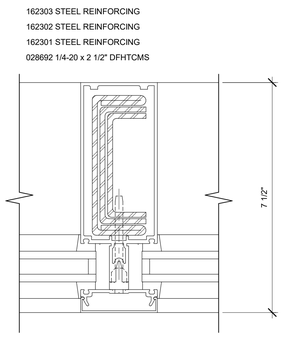

A STEEL REINFORCING DETAIL

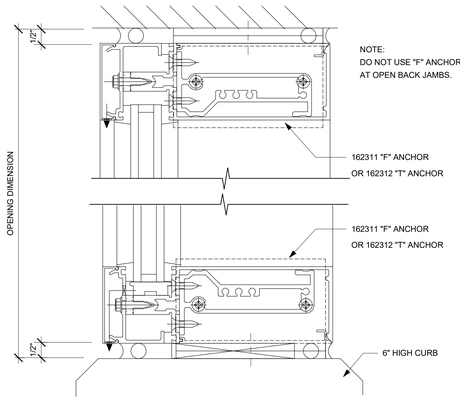

B SECTION THRU "T" & "F-ANCHORS"

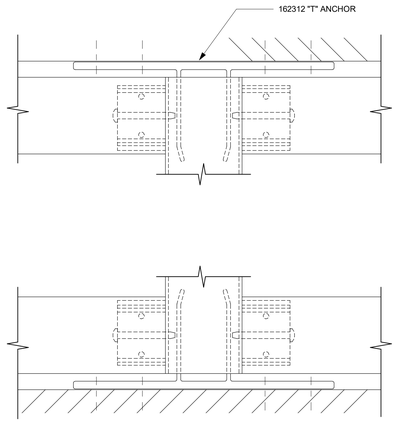

C "T-ANCHOR" DETAIL
EXTERIOR VIEW AT HEAD & SILL

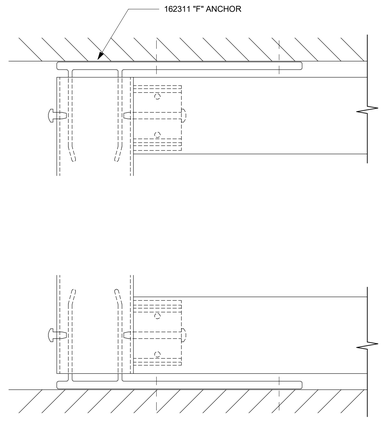

D "F-ANCHOR" DETAIL
EXTERIOR VIEW AT HEAD & SILL

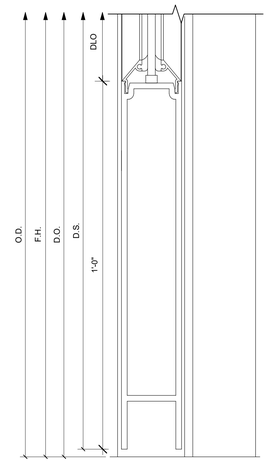

THRESHOLD- 12" BOTTOM RAIL | 6" = 1'-0" | 5

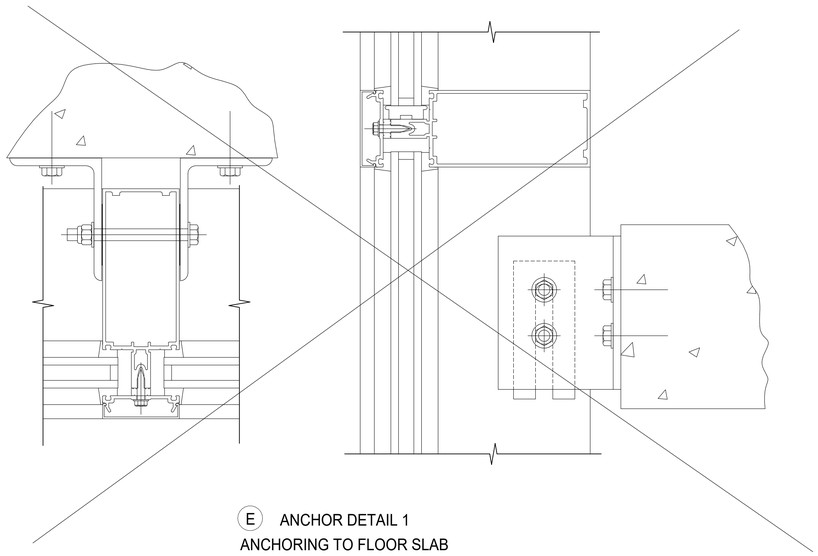

TYPICAL ANCHOR DTLS & STEEL REINFORCING | 6" = 1'-0" | 7

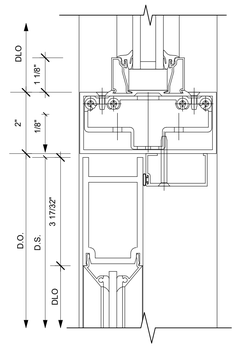

CONCEALED CLOSER | 6" = 1'-0" | 8

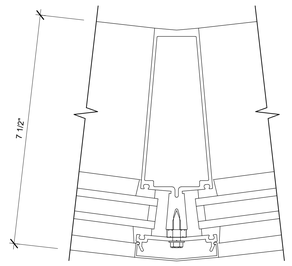

CORNER DETAIL- SYSTEM 1 | 6" = 1'-0" | 9

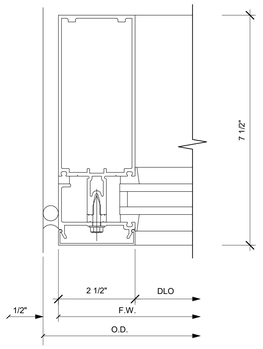

JAMB DETAIL | 6" = 1'-0" | 10

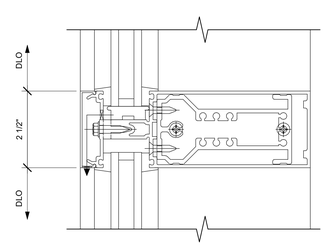

HORIZONTAL MULLION | 6" = 1'-0" | 11

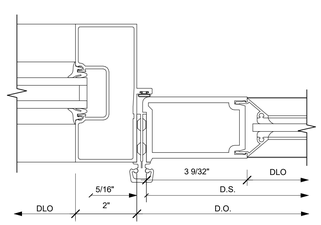

DOOR JAMB AT SIDELITE | 6" = 1'-0" | 12

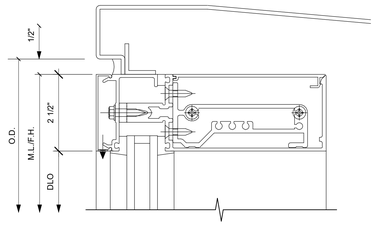

HEAD DETAIL | 6" = 1'-0" | 13

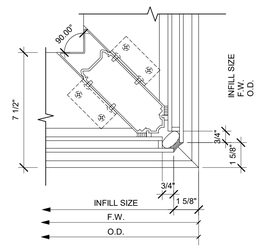

CORNER DETAIL- SYSTEM 2 | 3" = 1'-0" | 19

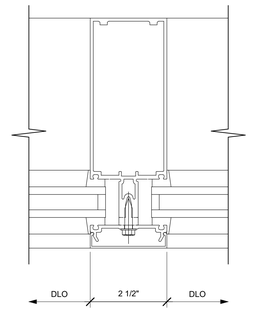

VERTICAL MULLION | 6" = 1'-0" | 20

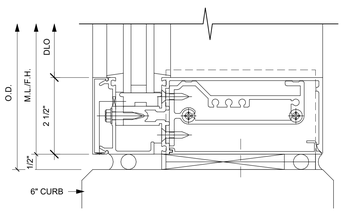

SILL DETAIL | 6" = 1'-0" | 16

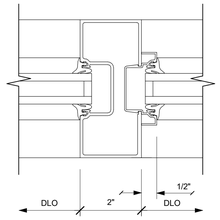

DOOR JAMB @ TRANSOM SIDELITE | 6" = 1'-0" | 17

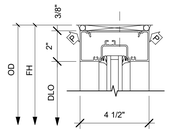

TRANSOM HEAD DETAIL | 3" = 1'-0" | 18

IDENTIFICATION STAMP
DIV. OF THE STATE ARCHITECT
APP. 04-118693 INC:
REVIEWED FOR
SS ☑ FLS ☑ ACS ☑
DATE: 03.13.2020

Revison	Date

Consultant

Engineer

studiowc
ARCHITECTURE + ENGINEERING
515 Encinitas Blvd, Ste. 201, Encinitas, California 92024
Telephone: (760) 632-8800 Fax: (760) 452-7541

LICENSED ARCHITECT
ROBERT D. WEBB
C-28036
OCTOBER 31, 2021
STATE OF CALIFORNIA

CHET F. HARRITT ELEM. SCHOOL
LRC & CLASSROOM ADDITION
SANTEE SCHOOL DISTRICT

OPENING DETAILS- CURTAIN WALL

Drawn: Author
Checked: Checker
Date: OCTOBER 18, 2019
Job: SSD-CFH-05

A80.2

ABBREVIATION

AB	ANCHOR BOLT	INFO	INFORMATION
ABV	ABOVE	INT	INTERIOR
ADDTL	ADDITIONAL		
ALT	ALTERNATE	KP	KING POST
ARCH	ARCHITECT,ARCHITECTURAL	KSI	KIPS PER SQ INCH
BTWN	BETWEEN	LBS	POUNDS
BLW	BELOW	LG	LONG
BLDG	BUILDING	LONG	LONGITUDINAL
BLKG	BLOCKING	LT WT	LIGHT WEIGHT
BM	BEAM		
BN	BOUNDARY NAILING	MAX	MAXIMUM
BOTT	BOTTOM	MB	MACHINE BOLT
BS	BOTH SIDES	MD	METAL DECK
BSMT	BASEMENT	MECH	MECHANICAL
		MFR	MANUFACTURER
CLR	CLEAR	MIN	MINIMUM
CLG	CEILING	MISC	MISCELLANEOUS
CMU	CONCRETE MASONRY UNITS		
COL	COLUMN	NS	NEAR SIDE
CONC	CONCRETE	NW	NORMAL WEIGHT
CONN	CONNECTION		
CONST	CONSTRUCTION	OC	ON CENTER
CONT	CONTINUOUS	OPP	OPPOSITE
CONTR	CONTRACTOR		
CF	CUBIC FOOT	PSF	POUNDS PER SQ FOOT
CJ	CONST JOINT	PSI	POUNDS PER SQ INCH
CVR	COVER		
		REINF	REINFORCEMENT
DIA	DIAMETER	REQ	REQUIRED
DIR	DIRECTION		
DT	DRAG TIE	SCHED	SCHEDULE
DWG	DRAWING	SF	SQUARE FOOT
		SHT	SHEET
EA	EACH	SIM	SIMILAR
EF	EACH FACE	SPEC	SPECIFICATION
ELEC	ELECTRICAL	SQ	SQUARE
EL	ELEVATION	STD	STANDARD
ENGR	ENGINEER	STL	STEEL
EXP JT	EXPANSION JOINT	STRUCT	STRUCTURAL
EQ	EQUAL	SYM	SYMMETRICAL
EXT	EXTERIOR	THK	THICK
		T&B	TOP & BOTTOM
FF	FINISHED FLOOR	TOF	TOP OF FOOTING
FG	FINISHED GRADE	TL	TOP OF LEDGER
FL	FLOOR	TOS	TOP OF STEEL, TOP OF SHEATHING
FS	FAR SIDE	TRANSV	TRANSVERSE
FDN	FOUNDATION	TS	TUBE STEEL
FOC	FACE OF CONCRETE	TYP	TYPICAL
FOS	FACE OF STUD		
FT	FOOT, FEET	UNO	UNLESS NOTED OTHERWISE
FOOTING	FTG		
		VERT	VERTICAL
GA	GAGE		
GALV	GALVANIZED	WF	WIDE FLANGE BEAM
GND	GROUND	W/	WITH
GR	GRADE	W/O	WITHOUT
		WP	WATERPROOFING
HB	HEADED BOLT	WWF	WELDED WIRE FABRIC
HT	HEIGHT	WT	WEIGHT
HORIZ	HORIZONTAL	WP	WORKING POINT
HS	HIGH STRENGTH	WS	WELDED STUD

POWDER DRIVEN SHOT PINS (LOW VELOCITY)

1. SHOT PINS MAY BE USED FOR SHEAR LOADS AND THEY MAY BE USED IN TENSION TO SUPPORT LOADS LESS THAN 100 POUNDS FOR MINOR LOADS LIKE ACOUSTICAL CEILINGS, DUCT WORK, CONDUIT, ETC. ANY SHOT ANCHORS MUST HAVE ICC APPROVAL FOR USE ON CONCRETE CURBS.
2. THE ALLOWABLE LOADS SHALL BE 100 POUNDS OR 80 % OF ESR 1663 VALUES, WHICHEVER IS LESS. QUALIFICATIONS FOR USE OF ALL POWER ACTUATED TOOLS MUST MEET ANSI A10.3 STANDARD AS REQUIRED BY THE MANUFACTURER AND ALL OSHA REQUIREMENTS.
3. TESTING - THE OPERATOR, TOOL AND FASTENER SHALL BE PRE - QUALIFIED BY THE PROJECT INSPECTOR. THE INSPECTOR SHALL OBSERVE THE TESTING OF THE FIRST 10 FASTENER INSTALLATIONS. A TEST "PULL - OUT" LOAD OF NOT LESS THAN TWICE THE DESIGN LOAD SHALL BE APPLIED TO THE PIN IN SUCH A MANNER AS NOT TO RESIST THE SPALLING TENDENCY OF THE CONCRETE SURROUNDING THE PIN. THEREAFTER, RANDOM TESTS UNDER THE PROJECT INSPECTOR'S SUPERVISION SHALL BE MADE OF APPROXIMATELY 1 IN 10 PINS. IF ANY PIN FAILS TESTING, TEST ALL PINS OF THE SAME CATEGORY NOT PREVIOUSLY TESTED UNTIL (20) CONSECUTIVE PASS, THEN RESUME THE INITIAL TESTING FREQUENCY.
4. SHOT PINS SHALL BE HILTI. X - U (ESR 2269) AND CAN BE USED TO CONNECT METAL STUD TRACK OR WOOD SILL TO
   - CONCRETE AND MASONRY — X - U 0.157 SHANK DIA. W/ 1-1/2" MIN.\ PENETRATION

MASONRY

1. F'm, SPECIFIED COMPRESSIVE STRENGTH OF CONCRETE MASONRY UNIT (CMU) SHALL BE AS FOLLOWS AND SHALL MATCH THE EXISTING BLOCK ON THE ADJACENT WALL FOR THE INFILL AREA.

   f 'm = 2000 PSI U.N.O.
2. CONCRETE BLOCK SHALL BE MEDIUM WEIGHT COMPLYING ASTM C90, GRADE N-1 AND ARTICLE 2.3 OF TMS 602/ACI 530.1/ASCE 6.
3. GROUT SHALL COMPLY WITH ASTM C476 AND ARTICLE 2.2 OF TMS 602/ACI 530.1/ASCE6. COMPRESSIVE STRENGTH SHALL NOT BE LESS THAN 2000 PSI AT 28 DAYS. GROUT SHALL BE FRESHLY PREPARED AND UNIFORMLY MIXED. SUBMIT MIX DESIGN FOR APPROVAL.
4. MORTAR SHALL COMPLY WITH ASTM C270, TYPE S AND ARTICLE 2.1A AND 2.6A OF TMS 602/ACI 530.1/ASCE6 WITH MINIMUM STRENGTH AT 28 DAYS OF 2000 PSI. PROVIDE MIX DESIGN PREPARED BY TESTING LAB FOR APPROVAL.
5. CEMENT SHALL CONFORM T, ASTM C150, TYPE I OR II. USE OF MASONRY CEMENT OR PLASTIC CEMENT IS NOT PERMITTED.
6. SPECIAL INSPECTION IS REQUIRED FOR ALL STRUCTURAL MASONRY UNITS PER CBC SECTION 1701A.
7. AGGREGATES FOR MORTAR AND GROUT SHALL BE NATURAL SAND AND ROCK COMPLYING WITH ASTM C144 AND C404.
8. SEE REINFORCING STEEL NOTES FOR REINFORCING STEEL, U.N.O.
9. REINFORCING STEEL SPLICES (U.N.O.):
   - 48 DIAMETERS @ LAP SPLICES IN WALL
   - 72 DIAMETERS @ FOOTING DOWELS
   - WHEN MINIMUM CLEAR DISTANCE BETWEEN BARS @ ADJACENT SPLICE IS 3 INCHES OR LESS, INCREASE SPLICE LENGTH 30 PERCENT UNLESS SPLICES ARE STAGGERED AT LEAST 24 BAR DIAMETERS.
10. PROVIDE MINIMUM 1" MINIMUM GROUT COVER AROUND ALL ANCHOR BOLTS, INSERTS, REINFORCING STEEL, ETC. PENETRATING MASONRY SHELL.
11. GROUT SOLID ALL CELLS UNLESS NOTED OTHERWISE MECHANICALLY VIBRATE GROUT IN CELLS.
12. USE LOW LIFT GROUTING METHOD PER CBC SECTION 2104A.5.1.1.1 UNLESS NOTED OTHERWISE. FOR HIGH LIFT GROUTING METHOD, SEE IR 21-2 AND CBC SECTION 2104A.1.3.1.1.1.1.
13. SET COURSES IN RUNNING BOND U.N.O. SET CELLS IN VERTICAL ALIGNMENT.
14. WHEN WORK IS STOPPED ONE HOUR OR LONGER, PROVIDE HORIZONTAL CONSTRUCTION JOINT BY STOPPING GROUT 1-1/2" BELOW TOP OF MASONRY UNIT.

WOOD CONT.

5. ALL BOLTED CONNECTIONS ARE TO BE RETIGHTENED PRIOR TO CLOSING IN.
6. NAILING SHALL BE WITH COMMON NAILS AND SHALL CONFORM TO THE CBC NAILING SCHEDULE TABLE 2304.10.1
7. SHEET METAL HANGERS, TIES, BRIDGING ANCHORS, ETC. SHALL BE BY THE SIMPSON COMPANY OR APPROVED EQUAL.
8. BLOCKING AND BRIDGING TO BE PROVIDED PER CBC 2308.4.6 AND 2308.7.8.
9. FOR 10d NAILS AT PLYWOOD SHEAR WALLS AND ROOF DIAPHRAGMS , PROVIDE 1½" MINIMUM PENETRATION INTO FRAMING PER AWS SDPWS (FORMERLY ANSI/AF & PA SDPWS)TALBES.

GLU LAM BEAMS

1. STRUCTURAL GLUED LAMINATED TIMBER SHALL BE DOUGLAS FIR FABRICATED TO CONFORM TO STANDARD SPECIFICATIONS FOR THE DESIGN AND FABRICATION OF STRUCTURAL GLUED LAMINATED TIMBER PER ANSI A190.1 AND AITC 117-2004 COMBINATION 24 F-V4 FOR SIMPLE SPAN & 24F-V8 FOR CANTILEVERED UNLESS NOTED OTHERWISE. GLULAM BEAMS ARE DESIGNED FOR DRY SERVICE CONDITION, U.N.O. SEE TYPICAL DETAIL 19/S1.3 FOR TENSION LAP SPLICE REQUIREMENTS OF GLULAMS. GLULAM BEAMS SHALL BE PROTECTED DURING SHIPPING AND FIELD HANDLING. PROVIDE SEALING AND WRAPPING IN ACCORDANCE WITH AITC 111. ALL GLUED LAMINATED TIMBER EXPOSED TO WEATHER SHALL BE ALASKAN CEDAR. (20F V12 - AC/AC)

COMPOSITE LUMBER

1. STRUCTURAL COMPOSITE LUMBER SHALL BE MANUFACTURED BY WEYERHAEUSER, TIMBERSTRAND (LSL) OR APPROVED EQUAL. ALL LSL SHALL BE 1.55E AND IN ACCORDANCE WITH ESR # 1387

   E = 1,550,000 PSI
   F_b = 2325 PSI
   F_t = 1600 PSI
   $F_{t\perp}$= 900 PSI
   F_v= 2170 PSI
   F_c = 525 PSI
   S.G. = 0.50
2. STRUCTURAL COMPOSITE LUMBER SHALL BE MANUFACTURED BY PARALLAM, PARALLEL STRANDED LUMBER (PSL) OR APPROVED EQUAL. ALL PSL SHALL BE PARALLAM PSL 2.0E AND IN ACCORDANCE WITH ESR # 1387

   G = 125,000 PSI
   E = 2.0 X 10 PSI
   F_t = 2900 PSI
   F_c = 2025 PSI
   $F_{c\perp}$= 625 PSI
   F_v= 2900 PSI
   F_c = 290 PSI
   S.G. = 0.50

EXPANSION OR EPOXY - TYPE ANCHORS

1. INSTALLATION SHALL BE IN ACCORDANCE WITH THE 2016 CBC 1910.A.5.
2. INSTALLATION SHALL BE CONTINUOUSLY INSPECTED IN ACCORDANCE WITH ICC EVALUATION .
3. LOAD TEST FOR VALUES SHOWN U.N.O. ARE IN ACCORDANCE WITH CBC, SECTION 1910A.5.4
4. ALL EXPANSION BOLTS TO BE USED SHALL BE HILTI KB-TZ ANCHORS TYP PER ICC ESR-1917. ALL EPOXY BOLTS SHALL BE SIMPSON SET-XP EPOXY PER ICC ESR-2508. NO SUBSTITUTION SHALL BE MADE WITHOUT APPROVAL FROM THE STRUCTURAL ENGINEER.

   HILTI KB TZ BOLT TESTING TABLE. FOR EPOXY BOLTS SEE SPECIFIC DETAIL FOR EMBEDMENT AND DIRECT PULL TESTING LOAD.

BOLT DIA.	MINIMUM DEPTH OF EMBEDMENT	REQUIRED INSTALLATION TORQUE FOR EXPANSION BOLT
3/8"	2"	25 FT-LBS
1/2"	3 1/4"	40 FT- LBS
5/8"	4"	60 FT- LBS
3/4"	4 3/4"	110 FT- LBS

TABLE NOTES:

A. TABULATED VALUES ARE BASED ONTHE ICC ESR REPORT #1917 AND SHALL BE INSTALLED WITH SPECIAL INSPECTION. THE TABULATED VALUES ARE FOR ANCHORS INSTALLED A MINIMUM OF 12 DIAMETERS ON CENTER AND A MINIMUM EDGE DISTANCE OF 12 DIAMETERS. SEE CBC 1910A.5.5 FOR ACCEPTANCE AND FAILURE CRITERIA.

B. WHEN THE EXPANSION-TYPE ANCHORS ARE TO BE USED FOR SILL PLATE BOLTING APPLICATIONS, 10% OF THE ANCHORS SHALL BE TORQUE TESTED. WHEN EXPANSION-TYPE ANCHORS ARE USED FOR OTHER STRUCTURAL APPLICATIONS, ALL SUCH EXPANSION ANCHORS SHALL BE TESTED. WHEN EXPANSION-TYPE ANCHORS ARE USED FOR NONSTRUCTURAL APPLICATIONS SUCH AS EQUIPMENT ANCHORAGE, 50% OR ALTERNATE BOLTS IN A GROUP SHALL BE TORQUE TESTED.

C. THE TESTING OF THE EXPANSION AND EPOXY ANCHORS SHALL BE DONE IN THE PRESENCE OF THE PROJECT INSPECTOR AND A REPORT OF THE TEST RESULTS SHALL BE SUBMITTED TO DSA ENFORCEMENT AGENCY. IF ANY ANCHORS FAIL THE TESTING REQUIREMENTS, DSA ENFORCEMENT AGENCY SHALL DETERMINE IF THE PROPOSED ADDITIONAL TESTING REQUIREMENTS ARE ACCEPTABLE.

REINFORCING STEEL

1. REINFORCING STEEL SHALL CONFORM TO ASTM A615 GRADE 40 FOR#3 AND SMALL AND GRADE 60 FOR #4 AND LARGER. REINFORCING STEEL TO BE WELDED SHALL CONFORM TO ASTM A706, GRADE 60.
2. WELDED WIRE FABRIC (WWF) SHALL COMPLY WITH ASTM A1064, AND SHALL BE LAPPED 1-1/2 SPACES (12" MIN).
3. ALL REINFORCING STEEL, DOWELS, ANCHOR BOLTS, ETC. SHALL BE WELL SECURED IN PLACE PRIOR TO PLACING CONCRETE.
4. ALL REINFORCING STEEL SHALL BE LAPPED AS SPECIFIED ON THE DETAIL. WHERE NOT SPECIFICALLY INDICATED ON THE DRAWING, ALL REINFORCING STEEL SHALL BE LAPPED USING THE TENSION SPLICE LENGTHS IN THE SCHEDULE ON DRAWING UNLESS NOTED OTHERWISE, TERMINATED CONTINUOUS BARS AT DISCONTINUOUS ENDS WITH STANDARD HOOKS.
5. DOWELS SHALL BE PROVIDED AT POUR AND CONSTRUCTION JOINTS AND SHALL BE THE SAME SIZE AND SPACING AS THE REINFORCING SHOWN FOR THE SUBSEQUENT CONSTRUCTION.
6. REINFORCING STEEL SHALL HAVE THE FOLLOWING MINIMUM COVERS, U.N.O.

   CONCRETE AGAINST EARTH (NOT FORMED) ——— 3"
   CONCRETE AGAINST EARTH (FORMED AND TROWELED) ——— 2"
   WALL AND CURB ——— 1-1/2"
   SLAB ON GRADE ——— CENTER
7. WELDING OF REINFORCING STEEL SHALL COMPLY WITH AWS D1.4. ALL BARS TO BE WELDED SHALL CONFORM TO ASTM A706, GRADE 60.
8. SUBMIT REINFORCING STEEL SHOP DRAWING TO ARCHITECT FOR APPROVAL.

STRUCTURAL STEEL

1. ALL STRUCTURAL STEEL SHALL CONFORM TO THE REQUIREMENTS OF ASTM A6 AND SHALL BE FABRICATED ACCORDING TO AISC PRACTICE AND SPECIFICATION FOR BUILDING.
2. MATERIALS: PROVIDE STRUCTURAL STEEL COMPLYING WITH ASTM STANDARD AS FOLLOWS, U.N.O.

A.	ALL WIDE FLANGES	ASTM A992, GRADE 50
B.	TUBES (HSS ROUNDS, HSS TUBES)	ASTM A500, GRADE B (46ksi)
C.	PIPES	ASTM A53, GRADE B (35ksi)
D.	CHANNELS, ANGLES, PLATES	ASTM A36 (U.O.N.)
E.	ANCHOR BOLTS	ASTM A307
F.	THREADED ROD	ASTM A36

3. BOLTS
   A. UUSE ASTM A307 BOLTS, NUTS AND WASHERS UNLESS NOTED OTHERWISE.
   B. STANDARD BOLT HOLE SHALL BE 1/16" LARGER IN DIAMETER THAN NORMAL BOLT DIAMETER, U.N.O.
   C. OVERSIZE BOLTS HOLES FOR ANCHOR BOLTS IN BASE PLATE MAY BE ALLOWED BY PROVIDING 3-1/2" SQUARE PLATE WASHERS UNDER NUT U.N.O. THICKNESS OF PLATE WASHER SHALL BE 0.5 TIMES THE DIAMETER OF ANCHOR BOLTS U.N.O. USE 5/16 INCH FILLET WELD AROUND PLATE WASHER U.N.O.
4. WELDING
   A. ALL WELDS SHALL BE DONE USING THE SHIELDED ELECTRIC ARC PROCESS BY AWS CERTIFIED WELDERS USING AWS D1.1 LOW - HYDROGEN E70XX ELECTRODES.
   B. ALL WELDS USED IN PRIMARY MEMBERS AND CONNECTIONS IN THE LATERAL FORCE SYSTEMS SHALL BE MADE WITH A FILLER MATERIAL THAT HAS A MINIMUM CHARPY V - NOTCH TOUGHNESS OF 20FT-LBS AT MINUS 20 DEGREES F. AS DETERMINED BY AWS CLASSIFICATION.
   C. CONTINUOUS INSPECTION IS REQUIRED FOR ALL FIELD AND SHOP WELDING BY AN INSPECTOR APPROVED BY GOVERNING CODE - AUTHORITY (DSA FOR PUBLIC SCHOOLS)
   D. WELDERS SHALL BE QUALIFIED AND CERTIFIED BY THE GOVERNING CODE AUTHORITY. (DSA FOR PUBLIC SCHOOLS)
5. STEEL EXPOSED TO WEATHER SHALL BE HOT DIPPED GALVANIZED U.N.O. (SEE ARCHITECTURAL DRAWINGS FOR OTHER CONDITION)
6. STRUCTURAL STEEL SHOP DRAWINGS SHALL BE REVIEWED BY THE STRUCTURAL ENGINEER PRIOR TO FABRICATION.

WOOD

1. ALL WOOD MEMBERS SHALL BE DOUGLAS FIR LARCH #1 GRADE, EXCEPT BLOCKING MAY BE #2 GRADE, CONFORMING TO THE WCLIB GRADING RULES #16, OR AS SPECIFICALLY CALLED FOR ON THE DRAWINGS. EACH PIECE OF LUMBER SHALL BE GRADE MARKED. ALL MEMBERS TO HAVE MOISTURE CONTENT LESS THAN 19% AT TIME OF INSTALLATION.
2. ALL LUMBER WHICH COMES IN DIRECT CONTACT WITH CONCRETE OR MASONRY SHALL BE DOUGLAS FIR NO. 2 OR BETTER, PRESSURE TREATED AND BEAR THE MARK INDICATING CONFORMANCE WITH THE REQUIREMENTS OF AWPA STANDARD U1 AND T1. THE LUMBER SHALL BE PRESSURE TREATED WITH THE CHEMICAL ACZA, BORATE OR EQUAL. WHERE SILLS ARE CUT, DRILLED OR NOTCHED THEY SHALL BE TREATED WITH A PRESERVATIVE THAT MEETS THE AWPA STANDARD U1 AND APPROVED BY THE ARCHITECT AND THE ENFORCEMENT AGENCY. ON ALL EXPOSED SURFACES FROM WHICH THE PRESERVATIVE TREATMENT HAS BEEN REMOVED. SILLS AT SHEAR WALLS AND BEARING WALLS SHALL BE FLAT AND UNIFORM ON CONCRETE SURFACE SO AS TO OBTAIN CONTINUOUS BEARING.
3. ALL PLYWOOD SHALL BE MANUFACTURED USING EXTERIOR GLUE AND SHALL CONFORM TO U.S. PRODUCT STANDARD PS-1, SECTION 7. PANELS SHALL CONFORM TO THE GRADES SPECIFIED ON THE DRAWINGS. PANELS EXPOSED TO WEATHER SHALL BE EXTERIOR GRADE. EACH PANEL SHALL BEAR MARKINGS IDENTIFYING THE QUALIFIED TESTING AND INSPECTION AGENCY, GRADE, NOMINAL THICKNESS, SPAN RATING, EXPOSURE DURABILITY CLASSIFICATION AND STANDARD TO WHICH IT IS CERTIFIED.
4. USE OF MACHINE NAILING IS SUBJECT TO A SATISFACTORY JOB SITE DEMONSTRATION FOR EACH PROJECT AND THE APPROVAL OF THE PROJECT ARCHITECT OR STRUCTURAL ENGINEER AND THE ENFORCEMENT AGENCY. THE APPROVAL IS SUBJECT TO CONTINUED SATISFACTORY PERFORMANCE. MACHINE NAILING IS NOT ALLOWED FOR 5/16 INCH PLYWOOD. IF THE NAIL HEADS PENETRATE THE OUTER PLY MORE THAN WOULD BE NORMAL FOR A HAND HELD HAMMER, OR IF MINIMUM ALLOWABLE EDGE DISTANCES ARE NOTE MAINTAINED, THE PERFORMANCE WILL BE DEEMED UNSATISFACTORY AND MACHINE NAILING SHALL BE DISCONTINUED.

GENERAL

1. ALL WORKS AND MATERIALS SHALL CONFORM TO THE 2016 CALIFORNIA BUILDING CODE AND ALL LOCAL CODES.
2. STRUCTURAL DRAWINGS ARE PARTS OF CONTRACT DOCUMENTS. THE CONTRACTOR SHALL VERIFY ALL DIMENSIONS AND CONDITIONS AND COORDINATE WITH ARCHITECTURAL DRAWINGS, DRAWINGS FROM OTHER CONSULTANTS, PROJECT SHOP DRAWINGS AND FIELD CONDITIONS, AND SHALL NOTIFY THE ARCHITECT AND ENGINEERS OF ANY DISCREPANCIES.
3. STRUCTURAL DRAWINGS AND SPECIFICATIONS REPRESENT THE FINISHED STRUCTURE. CONTRACTOR SHALL PROVIDE MEANS AND METHODS AS REQUIRED. PROVIDE ADEQUATE BRACING, SHORING, TEMPORARY STRUCTURES AND PARTIALLY COMPLETED PORTIONS OF WORKS COMPLYING WITH NATIONAL, STATE AND ALL LOCAL SAFETY ORDINANCES.
4. TYPICAL DETAILS AND SCHEDULES MAY NOT BE REFERENCED ON DRAWINGS. CONTRACTOR SHALL REVIEW AND BE FAMILIAR WITH ALL TYPICAL DETAILS AND SCHEDULES PRIOR TO PROCEED WITH WORK.
5. CONTRACTOR SHALL PROTECT EXISTING FACILITIES, STRUCTURES AND UTILITY LINES FROM ALL DAMAGE.
6. THE CONTRACTOR SHALL NOT DEVIATE FROM THE TENDERED DOCUMENTS WITHOUT WRITTEN APPROVAL OF THE ARCHITECT, ENGINEERS AND DSA.
7. JOB SAFETY AND CONSTRUCTION PROCEDURES ARE THE SOLE RESPONSIBILITY OF THE CONTRACTOR.
8. FOR ALL LOCATIONS OF DATUM ELEVATION 0.0; REFER TO ARCHITECTURAL AND SITE DRAWINGS. ALL ELEVATIONS INDICATED ON THE STRUCTURAL DRAWINGS ARE MEASURED WITH RESPECT TO THIS DATUM, UNLESS NOTED OTHERWISE.

DESIGN LOADS

1. WIND DESIGN LOADS
   ULTIMATE DESIGN WIND SPEED.....115 MPH
   EXPOSURE..... C
   INTERNAL PRESSURE COEFFICIENT..... ± 0.18
   COMPONENT AND CLADDING..... -29.5 PSF (OUTWARD)
   +29.5 PSF (INWARD)
2. SEISMIC DESIGN LOADS
   RISK CATEGORY.....III
   SITE CLASS.....D
   SEISMIC DESIGN CATEGORY.....D
   IMPORTANCE FACTOR.....1.25
   S_s = 0.877 Fa=1.149
   S_1 = 0.341 Fv=1.719
   S_{DS} = 0.672
   S_{D1} = 0.39

BLDG ANALYSIS PROCEDURE
ALL EQUIVALENT LATERAL FORCE PROCEDURE

BLDG	DIRECTION	SEISMIC FORCE RESISTING SYSTEM	R	Cd	OMEGA	Cs
LCR BUILDING	BOTH	LFWSW	6.5	4.0	2.5	0.13 (LRFD)

"LFWSW" - LIGHT FRAMED WOOD SHEAR WALL

3. ROOF LIVE LOAD = 20PSF

FOUNDATION

1. FOUNDATION DESIGN IS BASED ON ORIGINAL GEOTECHNICAL REPORT PREPARED BY:

   NINYO & MOORE
   PROJECT NUMBER 108774001, DATED JULY 11, 2019
2. ALLOWABLE DESIGN VALUE :

BEARING PRESSURE	3000 PSF (W/ 18" MIN. DEPTH & WIDTH)(3500 PSF MAX)
PASSIVE PRESSURE	350 PCF (LEVEL)
FRICTION	0.35
SOIL WEIGHT	120 PCF
1/3 INCR FOR WIND/ SEISMIC LOADING	(WHERE ALLOWED, BASED ON LOAD COMBINATIONS)

3. FOOTING SHALL REST ON COMPACTED SOIL, SEE GEOTECHNICAL REPORT FOR OVEREXCAVATION AND RECOMPACTION REQUIREMENTS. AND 15/S1.1
4. NO BACKFILL SHALL BE DONE AGAINST FOUNDATION AND RETAINING WALL UNTIL CONCRETE HAS ATTAINED AT LEAST 75% OF ITS DESIGN STRENGTH. ADEQUATELY SHORE RETAINING WALLS DURING BACKFILL.
5. CONTRACTOR SHALL BE RESPONSIBLE TO ADEQUATELY PROTECT ALL EXCAVATION SLOPES. WHERE NECESSARY, SHEETING AND SHORING OF EXCAVATION SHALL BE PROVIDED WITH ALL REQUIRED TIE BACKS AND BRACING.
6. METHOD EMPLOYED IN ALL SHEETING AND SHORING SHALL BE DESIGNED BY A LICENSED PROFESSIONAL CIVIL ENGINEER.

REINFORCED CONCRETE (CAST-IN-PLACE)

1. STRUCTURAL CONCRETE AND CONCRETE PRACTICES SHALL CONFORM TO ACI 318 CURRENT EDITION AS WELL AS ALL APPLICABLE CODES STATED IN GENERAL NOTE.
2. ALL CONCRETE DETAILS SHALL BE IN ACCORDANCE WITH ACI-315 "MANUAL OF STANDARD PRACTICE FOR DETAILING REINFORCED CONCRETE STRUCTURES", UNLESS NOTED OTHERWISE.
3. ALL CONCRETE SHALL HAVE A MINIMUM COMPRESSIVE STRENGTH AT 28 DAYS AS FOLLOWS. ALL CONCRETE NORMAL WEIGHT U.N.O.

	STRENGTH (PSI)	CEMENT TYPE	W/C	WT (PCF)	MAX NOMINAL AGG:
SLAB ON GRADE	3000	II	0.50	145	1"
FOUNDATIONS	3000	II	0.50	145	1"

4. ALL CONCRETE SHALL HAVE A MAXIMUM SLUMP NO GREATER THAN 4" EXCEPT FOR FOUNDATIONS WHICH MAY HAVE 5" MAX SLUMP.
5. MIX DESIGNS SHALL BE APPROVED BY STRUCTURAL ENGINEER PRIOR TO USE.
6. PROPOSED CONSTRUCTION JOINT LOCATIONS SHALL BE SUBMITTED FOR REVIEW AND APPROVAL.

IDENTIFICATION STAMP
DIV. OF THE STATE ARCHITECT
APP. 04-118693 INC:
REVIEWED FOR
SS ☑ FLS ☑ ACS ☑
DATE: 03.13.2020

Date JAN 23, 2020
Revison
Date

WSI
WELSH STRUCTURES, INC.
12722 BARRETT LANE
SANTA ANA, CA 92705
PH: 714-832-6297
JN: 19-034
Consultant

PROFESSIONAL ENGINEER — No. 2998 — Exp. 9-30-20 — CIVIL — STATE OF CALIFORNIA — REGISTERED — Engineer

studiowc
ARCHITECTURE + ENGINEERING
515 Encinitas Blvd. Ste. 201, Encinitas, California 92024
Telephone: (760)753-6800 Fax: (760)452-7241

LICENSED ARCHITECT — REGINALD D. WEBB — RDWebb — C-28036 — EXPIRES 31-3-2021 — STATE OF CALIFORNIA

CHET F. HARRITT ELEM. SCHOOL
LRC & CLASSROOM ADDITION
SANTEE SCHOOL DISTRICT

GENERAL NOTES

Job: IUSD-MPES-02

S0.1

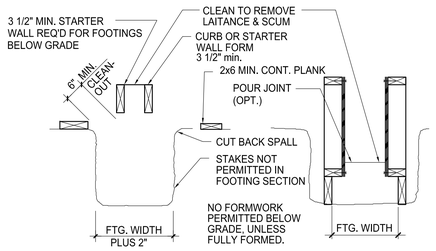

NOTES:

1. UNFORMED FOOTING DETAIL MAY BE USED PROVIDED TRENCH IS STABLE & APPROVED BY STRUCTURAL ENGINEER.
2. SOLID FORM LUMBER MAY BE USED IN UNEXPOSED CONSTRUCTION IF IN GOOD SOUND CONDITION.
3. ALL ANCHOR BOLTS, REINFORCING, INSERTS, ETC. TO BE FIRMLY TIED IN PLACE PRIOR TO PLACING CONCRETE.

1 FORMS FOR FOUNDATION

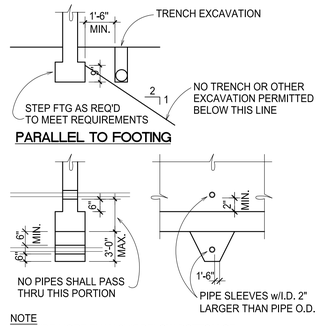

NOTE
FOR PIPE MORE THAN 3'-0" BELOW BOTTOM OF FOOTING USE COMPACTED FILL.

TRANSVERSE TO FOOTING

2 PIPES THROUGH FOOTING

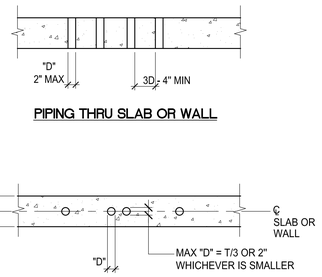

3 PIPES & CONDUIT IN WALLS AND SLAB

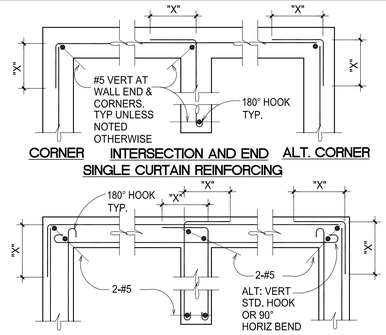

NOTE: "X" = 19/S1.1 CLASS 'B' AT CONC UNLESS NOTED
"X" = 72 DIA AT MASONRY UNLESS NOTED

4 REINF @ WALL AND GRD BEAM INTERSECTION

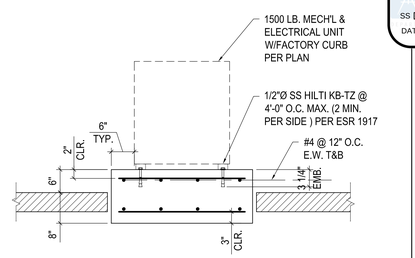

5 MECHANICAL PAD

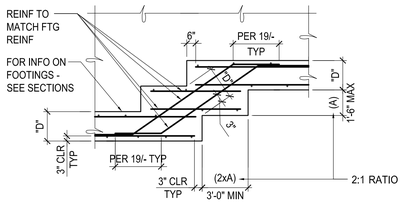

6 STEPPED FOOTING DETAIL

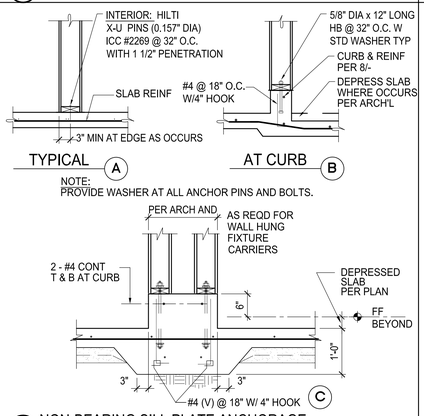

7 NON-BEARING SILL PLATE ANCHORAGE

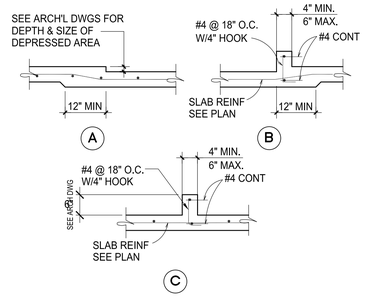

8 DEPRESSED SLAB AND CONC CURB

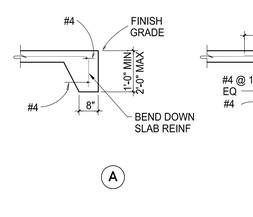

9 SLAB EDGE

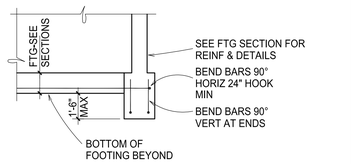

10 STEPPED FOOTING @ CORNER

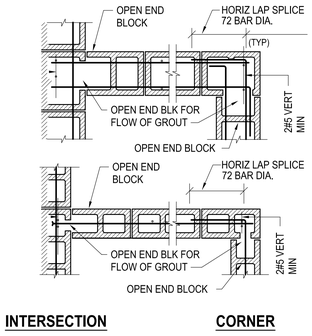

11 CMU WALL INTERSECTION

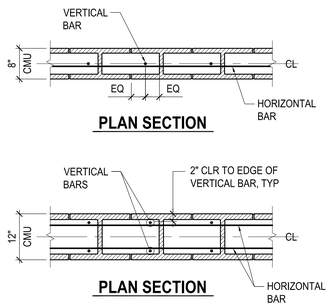

12 DETAIL FOR CLR. DISTANCE

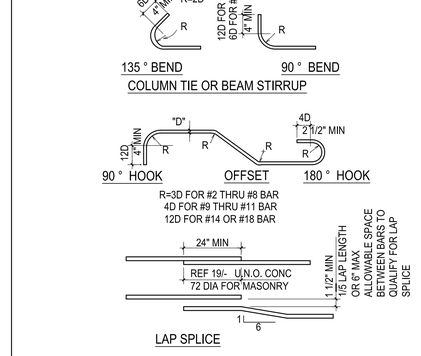

13 REINFORCING STEEL DETAIL

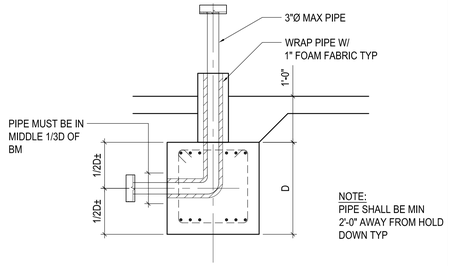

14 PIPE THRU FOOTING

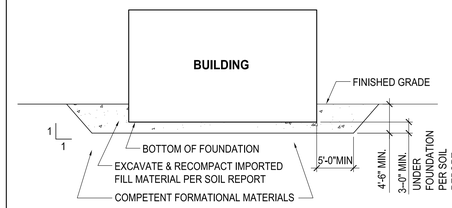

SOIL EXCAVATION AND RECOMPACTION

1. THE GRADING CONTRACTOR SHALL NOTIFY THE PROJECT GEOTECHNICAL ENGINEER NOT LESS THAN 72 HOURS IN ADVANCE OF THE LOCATION OF ANY SOILS PROPOSED FOR IMPORT. EACH PROPOSED IMPORT SOURCE SHALL BE SAMPLED, TESTED AND APPROVED PRIOR TO DELIVERY OF SOILS FOR USE ON THE SITE.
2. LOCAL AREAS MAY REQUIRE DEEPER EXCAVATION W/ THE EXACT DEPTH DETERMINED BY GEOTECHNICAL ENGINEER.

15 BUILIDNG OVER EXCAVATION

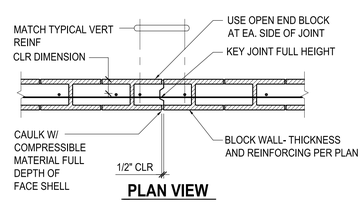

NOTES :

1. PROVIDE VERTICAL EXPANSION / CONTRACTION JOINTS IN WALL AT 25'-0"O.C. MAX. U.N.O. ON PLANS.
2. STOP EVERY OTHER HORIZONTAL REINFORCEMENT AT 2" FROM JOINT. TYP BOTH SIDES. HORIZONTAL REINF. AT ROOF AND FLOOR SHALL BE CONTINUOUS,
3. SEE ARCH. DWG'S. FOR LOCATIONS,
4. ALL CHORD BAR & LINTEL BAR SHALL BE CONTINUOUS THRU EXPANSION JOINT.

TYPICAL EXPANSION / CONTRACTION JOINT DETAIL

16

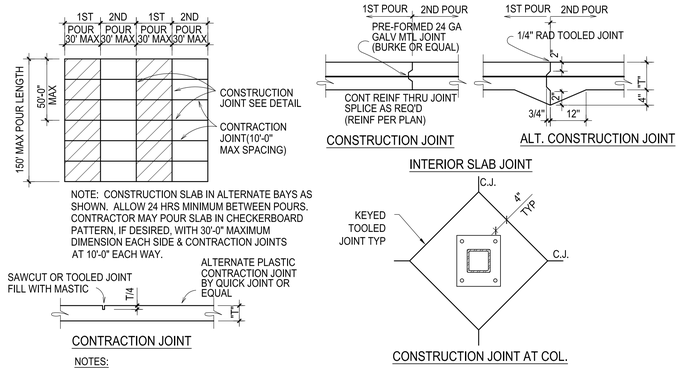

NOTES:

1. PROVIDE CONTRACTION OR CONSTRUCTION JOINTS AT CENTERLINE OF COLUMNS AND 10'-0" MAX O.C. UNO.

17 SLAB ON GRADE

SCHEDULE

CLASS A SPLICE (DEVELOPMENT) LENGTHS

CONCRETE	BAR SIZE	#4	#5	#6	#7	#8	#9	#10	#11
fc=3000	TOP BAR	24	30	35	51	59	66	73	80
HARD ROCK	OTHER BAR	18	23	27	40	45	51	56	62

CLASS B SPLICE LENGTHS

CONCRETE	BAR SIZE	#4	#5	#6	#7	#8	#9	#10	#11
fc=3000	TOP BAR	31	38	46	67	76	86	95	104
HARD ROCK	OTHER BAR	24	30	35	51	59	66	73	80

NOTES:

1. TOP BARS ARE HORIZONTAL BARS WITH MORE THAN 12" OF CONCRETE BELOW THEM.
2. WALL BARS ARE NOT CONSIDERED TOP BARS.
3. USE CLASS B SPLICES TYPICALLY U.N.O.
4. ALL LENGTHS ARE IN INCHES.
5. REF. ACI318 CHAPTER 25

19 REINFORCING BAR SPLICE SCHEDULE IN CONCRETE

IDENTIFICATION STAMP
DIV. OF THE STATE ARCHITECT
APP. 04-118693 INC:
REVIEWED FOR
SS ☑ FLS ☑ ACS ☑
DATE: 03.13.2020

Date JAN 23, 2020
Revison
Date

WSI
WELSH STRUCTURES, INC.
12722 BARRETT LANE
SANTA ANA, CA 92705
PH: 714-832-6297
JN: 19-034
Consultant

Engineer

vstudiowc
ARCHITECTURE + ENGINEERING
515 Encinitas Blvd. Ste. 201, Encinitas, California 92024
Telephone: (760)753-6800 Fax: (760)452-7541

LICENSED ARCHITECT
ROBERT D. WEBB
C-28036
EXPIRES 31 YEARS
STATE OF CALIFORNIA

CHET F. HARRITT ELEM. SCHOOL
LRC & CLASSROOM ADDITION
SANTEE SCHOOL DISTRICT

TYPICAL CONCRETE DETAILS

Job:
IUSD-MPES-02

S1.1

1 NAILING SCHEDULE

JOIST OR RAFTER TO SIDE OF STUD:	
8" DEEP JOIST OR LESS	3 - 16d
EACH ADDITIONAL 4" OF DEPTH	1 - 16d
BRIDGING TO JOIST:	
TOE NAIL EACH END	2 - 8d
BLOCKING BETWEEN JOISTS OR RAFTERS:	
TOE NAIL EACH SIDE, EACH END	2 - 10d *
BLOCKING BETWEEN STUDS:	
TOENAIL	4 - 8d
OR END NAIL	2 - 16d
1"x6" SUBFLOOR OR LESS TO EACH JOIST, FACE NAIL	2 - 8d
WIDER THAN 1"x6" SUBFLOOR TO EA. JOIST, FACE NAIL	3 - 8d
2" SUBFLOOR TO JOIST OR GIRDER, BLIND & FACE NAIL	2 - 16d
SOLE PLATE TO JOIST OR BLOCKING, FACE NAIL	16d @ 16"
SOLE PLATE TO JOIST OR BLK'G, @ BRACED WALL PANELS	16d @ 16"
TOP PLATE TO STUD, END NAIL	2 - 16d
STUD TO SOLE PLATE:	
TOENAIL	4 - 8d
OR END NAIL	2 - 16d
DOUBLE STUDS, FACE NAIL	16d @ 24"
DOUBLE TOP PLATES, FACE NAIL	16d @ 16"
DOUBLE TOP PLATES, LAP SPLICE	8 - 16d
BLOCKING BETWEEN JOISTS OR RAFTERS TO TOP PLATE:	
TOENAIL	3 - 8d
RIM JOIST TO TOP PLATE:	
TOENAIL	8d @ 6"
TOP PLATES, LAPS & INTERSECTIONS, FACE NAIL	2 - 16d
CONTINUOUS HEADER, TWO PIECES - ALONG EA. EDGE	16d @ 16"
CEILING JOIST TO PLATE, TOENAIL	3 - 8d
CONTINUOUS HEADER TO STUD, TOENAIL	4 - 8d
CEILING JOISTS, LAPS OVER PARTITIONS, FACE NAIL	3 - 16d
CEILING JOISTS TO PARALLEL RAFTERS, FACE NAIL	3 - 16d
JOIST OR RAFTER AT ALL BEARINGS:	
TOE NAIL EACH SIDE	2 - 10d
1" BRACE TO EACH STUD & PLATE, FACE NAIL	2 - 8d
1"x8" SHEATHING OR LESS TO EA. BEARING, FACE NAIL	3 - 8d
WIDER THAN 1"x8" SHT'G TO EA BEARING, FACE NAIL	3 - 8d
BUILT UP CORNER STUDS	16d @ 24"
BUILT UP GIRDER AND BEAMS:	
ALONG TOP AND BOTTOM OF BEAM OR JOIST	20d @ 32"
AT ENDS AND AT EACH SPLICE, STAGGER	2 - 20d
2" PLANKS, AT EA BEARING	2 - 16d
COLLAR TIES TO RAFTERS, FACE NAIL	3 - 10d

COMMON SHALL BE USED EXCEPT WHERE OTHERWISE STATED.

* WHEN POSSIBLE, NAILS DRIVEN PERPENDICULAR TO THE GRAIN SHALL BE USED INSTEAD OF TOE NAILS.

2 NON BEARING WALL BRACING

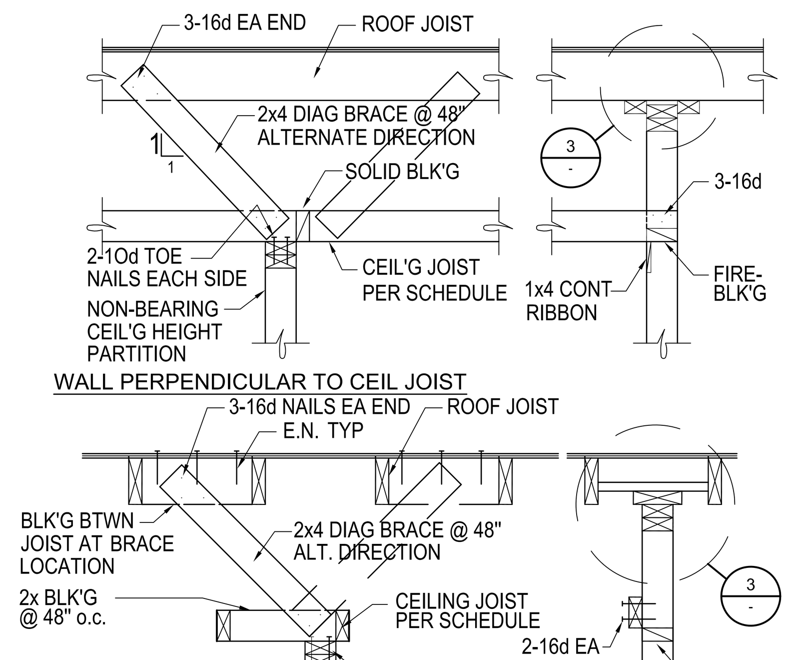

CEILING JOIST SCHEDULE (DL=12PSF)	
SPAN	JOIST
≤ 8'-0"	2x4 @ 16"
8'-1" to 14'-0"	2x6 @ 16"
14'-1" to 16'-0"	2x8 @ 16"

3 NON BEARING WALL SUPPORT

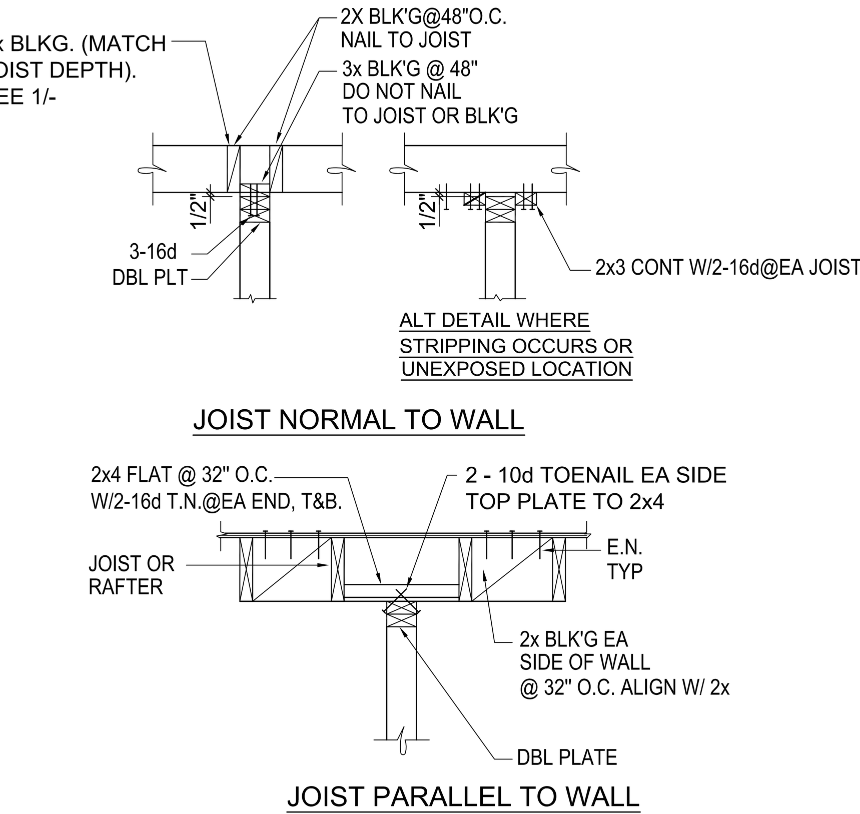

4 PLYWOOD ROOF DIAPHRAGM

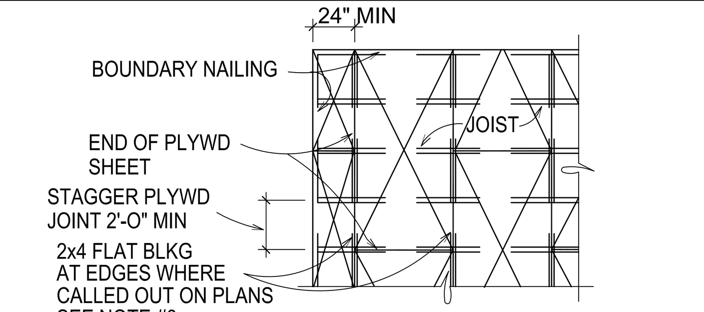

NOTES
1. RUN FACE GRAIN OF PLYWD PERPENDICULAR TO JOIST UNLESS NOTED OTHERWISE.
2. NAILS SHALL HAVE 3/8" MIN EDGE DISTANCE FROM EDGE OF PLYWD & FRAMING MEMBER. NAILS SHALL BE STAGGERED.
3. PROVIDE 3 x FRAMING WHERE NAIL SPACING IS LESS THAN 3" O.C. FOR 8d NAILS & 4" O.C. FOR 10d NAILS AT PLYWD JOINTS.
4. PROVIDE 3/4" NAIL EDGE DISTANCE AT 3 x MEMBERS.
5. WHERE JOIST LAP SPLICE OCCURS & PLYWD JOINT IS OFFSET, ADD 2x4 OR 3x4 NAILER AS SHOWN
6. BOUNDARY NAIL AT DIAPHRAM BOUNDARY, CHORDS, DRAG TIES, & WHERE CALLED OUT ON PLANS. DOUBLE ROW @ INTERIOR DRAG LINES
7. PLYWOOD JOINTS SHALL OCCUR AT THE CENTER OF FRAMING MEMBERS OR BLOCKING. THE MINIMUM EDGE DISTANCE FOR NAILS IN THE RECEIVING MEMBERS AND THE PLYWOOD SHALL BE 3/8" FOR 2-INCH NOMINAL RECEIVING MEMBERS AND 1/2" FOR 3-INCH NOMINAL RECEIVING MAMBERS. FLAT BLOCKING RECEIVING 10d NAILS SHALL BE 3-INCH BY 4-INCH NOMINAL OR LARGER.

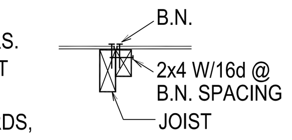

5 WASHER SCHEDULE

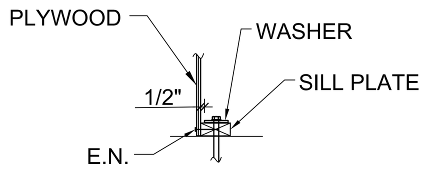

BOLT SIZE	STEEL WASHERS SQUARE	STEEL WASHERS ROUND	MALL IRON ROUND
1/2"	3"x1/4"	3 1/2"x1/4"	3 1/2"x1/4"
5/8"	3"x1/4"	3 1/2"x1/4"	3 1/2"x5/16"
3/4"	3"x1/4"	3 1/2"x5/16"	3 1/2"x7/16"
7/8"	3 1/4"x5/16"	3 1/2"x3/8"	3 1/2"x7/16"
1"	4"x3/8"	4"x7/16"	4"x1/2"

NOTES:
1. WASHERS SHALL BE USED UNDER ALL NUT & BOLT HEADS BEARING ON WOOD.
2. WASHER SCHEDULE ABOVE SHALL BE USED IN THE FOLLOWING LOCATIONS: ANCHOR BOLTS, WOOD TO STEEL & BOLTS IN TENSION AND SHEAR WALL A.B.
3. USE STANDARD CUT WASHERS AT ALL OTHER LOCATIONS.
4. WASHERS ABOVE ARE MIN. SIZES. SEE A/- FOR SHEAR WALL.

6 (NEW) SHEAR WALL SCHEDULE AND DETAIL

SHEAR WALL SCHEDULE										
MARK	PLYWOOD	NAIL AND SPACING: NAIL	E.N.	F.N.	EDGE STUD & BLK'G	SILL PLATE SEE NOTE #8: CONNECTOR	SPAC'G	SILL PLATE	A35 OR LPT4	SEISMIC SHEAR CAP. A.S.D.
A	15/32"	10d	6"	12"	2x	5/8"Øx12"H.B.	4'-0"	2x	@ 16"o.c.	340 #/ft
B	15/32"	10d	4"	12"	3x	5/8"Øx12"H.B.	2'-8"	3x	@ 16"o.c.	510 #/ft
C	15/32"	10d	3"	12"	3x	5/8"Øx12"H.B.	1'-4"	3x	@ 12"o.c.	665 #/ft
D	15/32"	10d	2"	12"	3x	5/8"Øx12"H.B.	1'-4"	3x	@ 8"o.c.	820 #/ft
E	3/8"	8d	6"	12"	2x	5/8"Øx12"H.B.	4'-0"	2x	@ 16"o.c.	280 #/ft

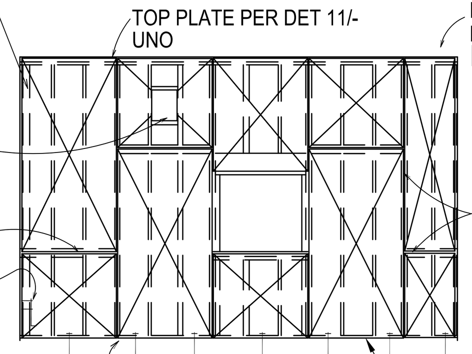

NOTES:
1. ALL PLYWOOD SHEATHING SHALL BE STRUCT I PLYWOOD.
2. ALL PLYWOOD EDGES SHALL BE BLOCKED WITH 2-INCH NOMINAL OR THICKER FRAMING. PLYWOOD MAY BE INSTALLED EITHER HORIZONTALLY OR VERTICALLY.
3. WHERE PLYWOOD PANELS ARE APPLIED ON BOTH FACES OF A WALL, PLYWOOD PANEL JOINTS SHALL OCCUR AT 3" NOMINAL OR THICKER FRAMING MEMBERS, INCLUDING BLOCKING, AND NAILS SHALL BE STAGGERED.
4. SHEARWALLS MORE THAN ONE VERTICAL PANEL IN HEIGHT SHALL HAVE EITHER VERT OR HORIZ STAGGERED SPLICED JOINTS. AT CONT HORIZ JOINTS THE BLK'G SHALL BE 3" NOMINAL OR THICKER.
5. THE MINIMUM EDGE DISTANCE FOR NAILS IN THE RECEIVING MEMBERS AND THE PLYWOOD SHALL BE 3/8" FOR 2" NOMINAL RECEIVING MEMBERS AND 1/2" FOR 3" NOMINAL RECEIVING MEMBERS. BLK'G RECEIVING 10d NAILS SHALL BE 3" NOMINAL OR LARGER.
6. SILL PLATE SHALL BE PRESSURE TREATED D.F. AND CONFORM TO SILL PLATE DETAILS. PROVIDE MINIMUM OF 3 ANCHOR BOLTS IN ALL SHEARWALLS.
7. ANCHOR SPACING SHALL BE REDUCED TO HALF THE SPACING SHOWN WHERE SHEARWALL SHEATHING IS ON BOTH SIDES OF THE WALL (TWICE AS MANY A.B.). ALSO STAGGER NAILING @ JOINTS.
8. ALL DEFECTIVE NAILS SHALL BE REMOVED & REPLACED WITH SOUND NAILING.
9. NAILING WITH MACHINE NAILS SHALL CONFORM TO THE WOOD GENERAL NOTES ON COVER SHEET.
10. ALL ANCHOR BOLTS AT SHEAR WALL SHALL BE 12" LONG HEX BOLTS U.N.O.
11. ALL NAILS TO SILL PLATE (P.T.D.F.) SHALL BE GALVANIZED.

8 SILL PLATE DETAIL

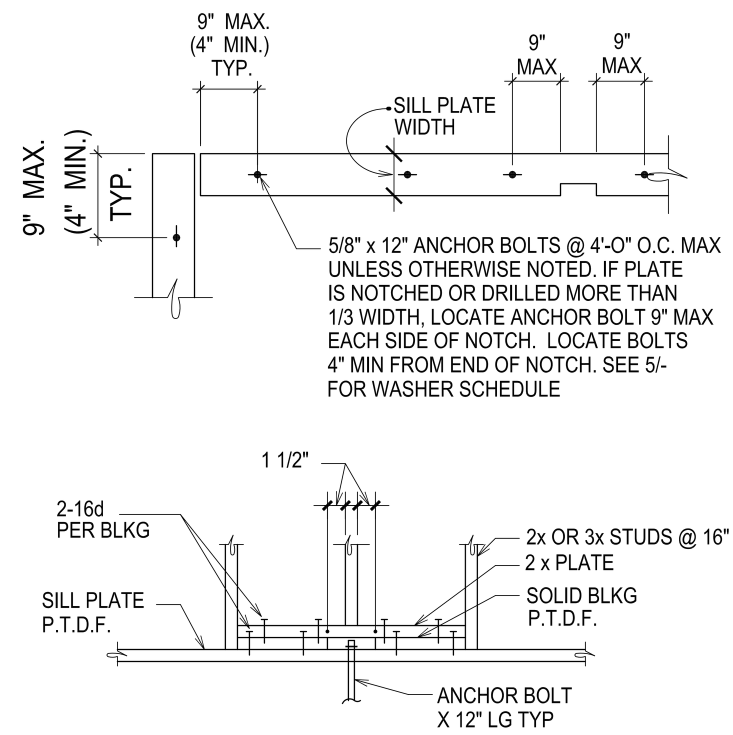

9 HEADER SCHEDULE

CLEAR OPNG WIDTH	HEADER SIZE	REMARKS
TO 4'-0"	6x6	
4'-1" TO 6'-0"	6x6	
6'-1" TO 8'-0"	6x8	
8'-1" TO 10'-0"	6x10	2-CRIPPLE STUDS U.N.O.
10'-1" TO 12'-0"	6x12	2-CRIPPLE STUDS U.N.O.

NOTE:
USE ABOVE SCHEDULED SIZES ONLY WHERE SIZE IS NOT INDICATED ON PLANS & DETAILS AND ONLY AFTER PRIOR WRITTEN APPROVAL FROM STRUCTURAL ENGINEER & D.S.A. IF SPAN EXCEEDS 12'-0". INTERIOR USE ONLY.

10 TOP PLATE NOTCH

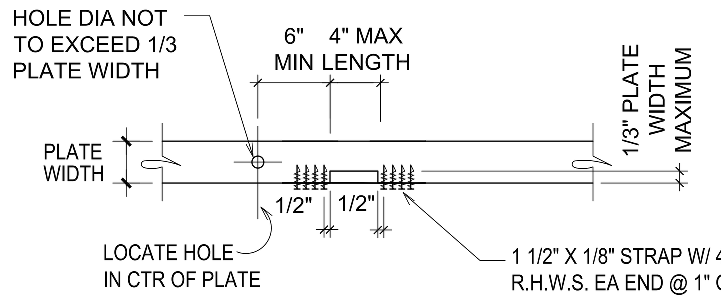

NOTE:
NOTCHES NOT PERMITTED WITHOUT PRIOR APPROVAL OF STRUCTURAL ENGINEER.

11 TOP PLATE SPLICE

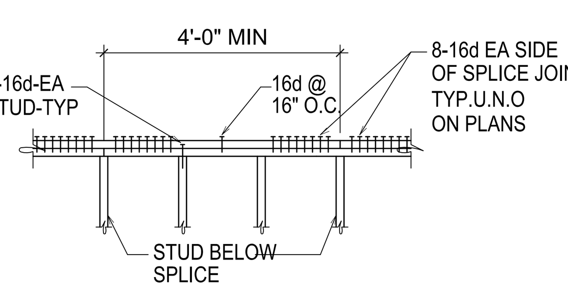

NOTE:
PROVIDE SPLICE W/ 3-16d AT PLATE LAPS AT CORNERS & INTERSECTIONS.

12 TYPICAL STUD WALL

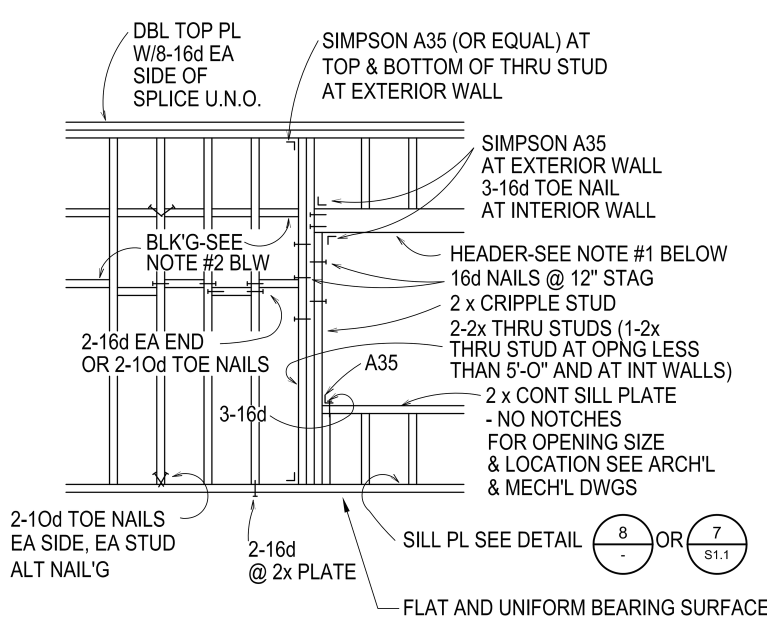

NOTES:
1. SEE DETAIL 9/- FOR TYPICAL HEADER. U.N.O. ON PLAN
2. BLOCKING REQ'D AT CEILING LINE & 8'-0" o.c. MAX SPACING. 2 x STUD WIDTH SOLID BLOCKING REQ'D. SEE SHEAR WALL DETAILS & SECTIONS FOR ADDITIONAL BLOCKING REQ'D.

13 STEEL TUBE NAILER

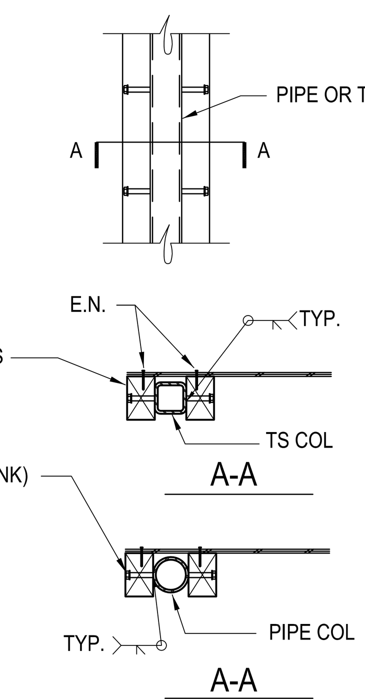

14 JOIST TO BEAM HANGER SCHEDULE

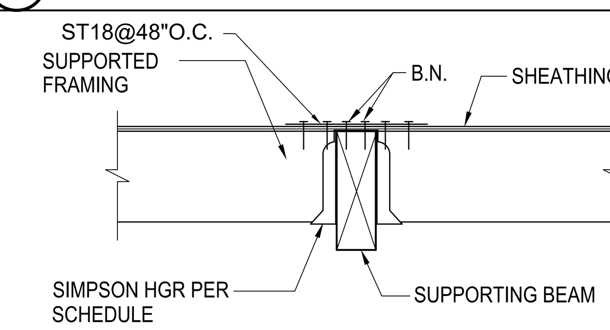

SUPPORTED FRAMING	HGR TYPE
2x	"U"
SKEWED 2x	"W"
MULTIPLE JOIST	"WNP"
3x AND LARGER	"W"
GLB	"GLT"

15 TYPICAL ROOF OPENING

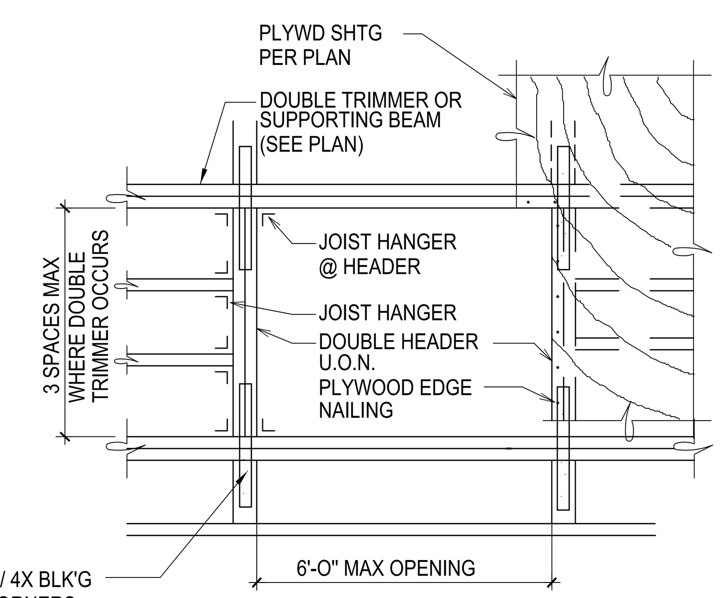

NOTE:
JOIST HGRS TO BE SIMPSON STD U JOIST HGRS. (OR EQUAL)

16 EXHAUST FAN SUPPORT

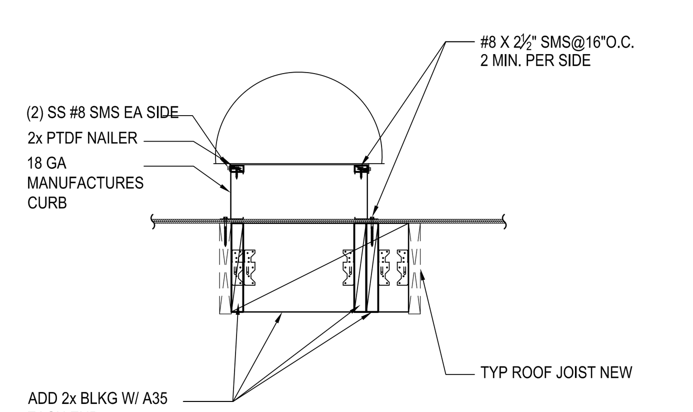

17 HVAC UNIT SUPPORT

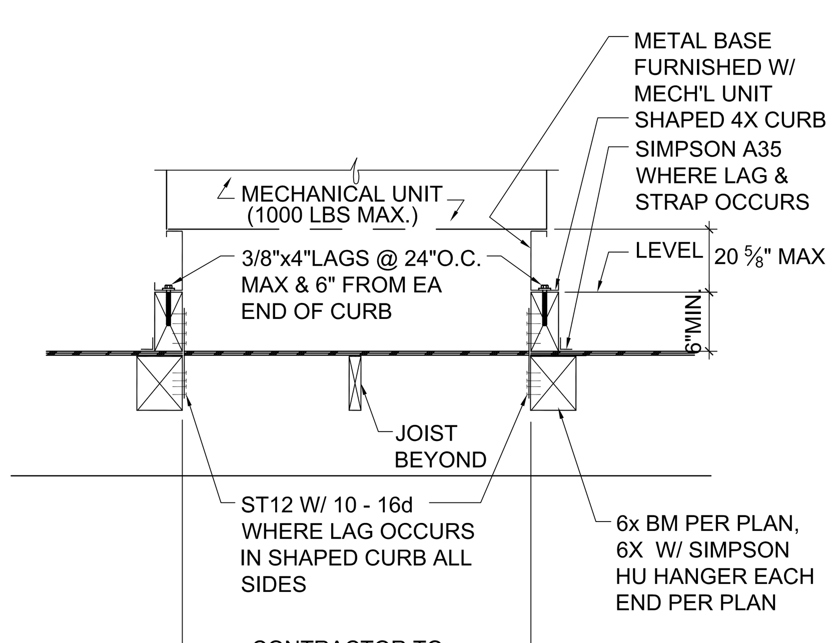

18 CONDENSING UNIT SUPPORT

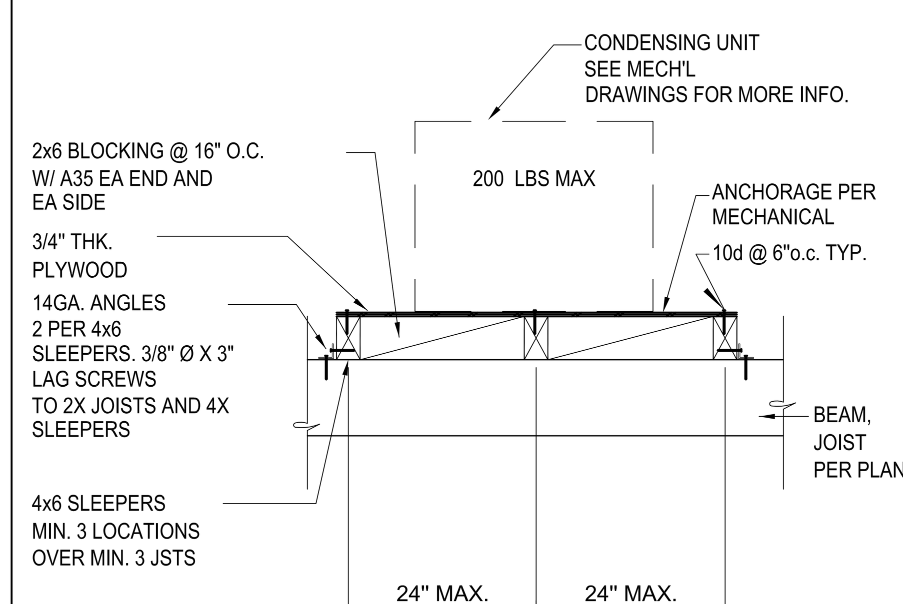

19 TYP. BLOCK'G OR CROSS BRIDGING

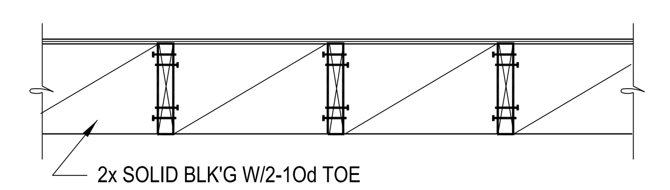

SOLID BLOCKING

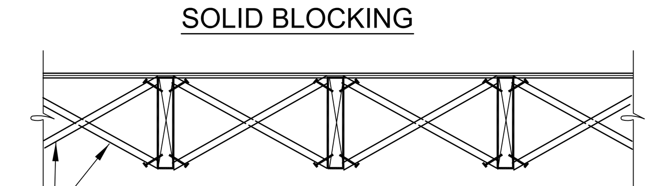

CROSS BRIDGING

NOTE: PROVIDE BLOCKING OR BRIDGING AT 8'-0" O.C. MAX AT ROOF JOISTS DEEPER THAN 8" AND AT ALL FLOOR JOISTS.

BLOCKING BETWEEN JOISTS TYPICAL AT ROOF & FLOOR

20 TYP. SHEAR WALL BLOCKING

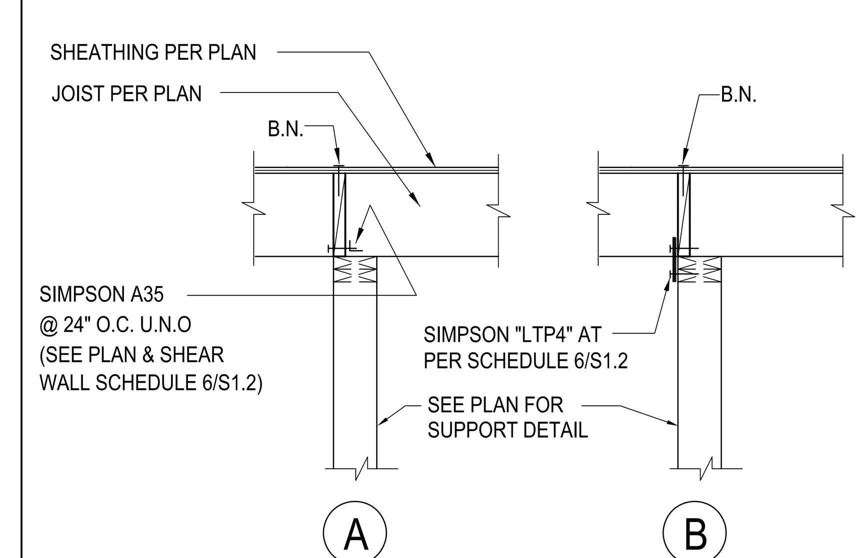

IDENTIFICATION STAMP DIV. OF THE STATE ARCHITECT
APP. 04-118693 INC:
REVIEWED FOR
SS ☑ FLS ☑ ACS ☑
DATE: 03.13.2020

Date: JAN 23, 2020

Revison | Date

WSI WELSH STRUCTURES, INC.
12722 BARRETT LANE
SANTA ANA, CA 92705
PH: 714-352-6297
J.N.: 19-034

Consultant

REGISTERED PROFESSIONAL ENGINEER STEVE WELSH No. 2998 Exp. 6-30-20 STRUCTURAL STATE OF CALIFORNIA

Engineer

studiowc ARCHITECTURE + ENGINEERING
515 Encinitas Blvd. Ste. 201, Encinitas, California 92024
Telephone: (760)753-6800 Fax: (760)452-7541

LICENSED ARCHITECT ROBERT D. WEBB A.I.A. C-28036 OCTOBER 31, 2021 STATE OF CALIFORNIA

CHET F. HARRITT ELEM. SCHOOL
LRC & CLASSROOM ADDITION
SANTEE SCHOOL DISTRICT

TYPICAL WOOD FRAMING DETAILS

Job: IUSD-MPES-02

S1.2

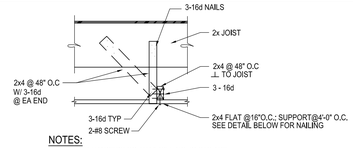

NOTES:
1. STAGGER HANGERS SO THAT CEILING JOISTS ARE SUPPORTED ON ALTERNATE ROOF JOISTS.

SUSPENDED CEILING DETAIL

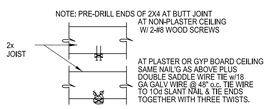

CEILING DETAIL

1 TYPICAL CEILING DETAIL

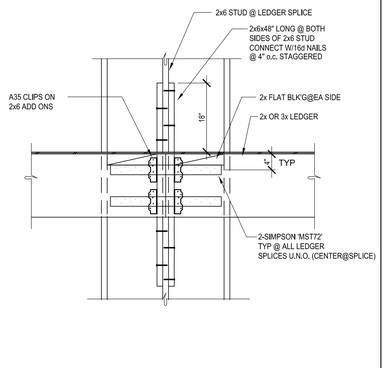

2 TYPICAL LEDGER SPLICE

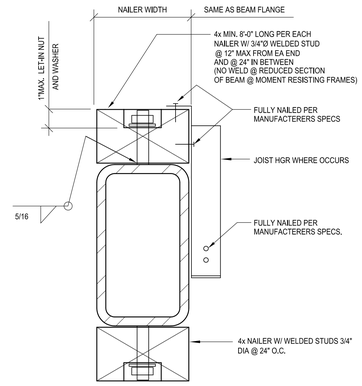

3 TYPICAL NAILER AT STEEL BEAM

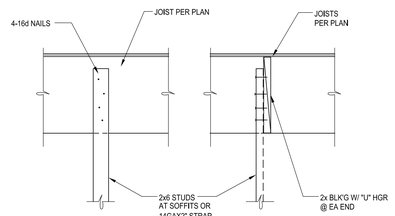

4 TYPICAL SOFFIT HANGER DETAIL

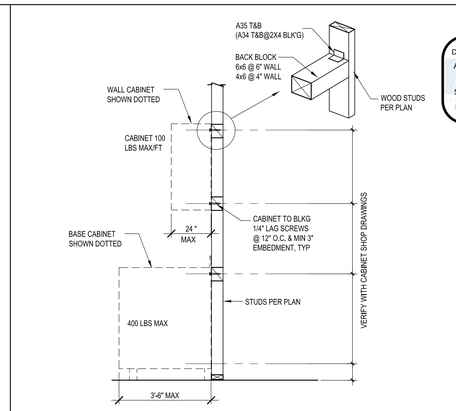

5 CABINET ANCHORAGE TO WALL

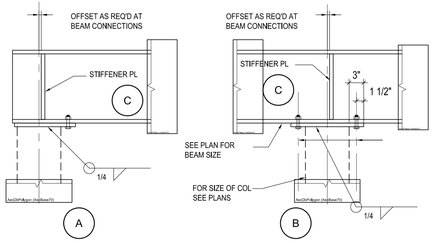

NOTE:
1. COLUMN CAP PLATE SHALL BE THE SAME WIDTH AS BEAM FLANGE OR COLUMN DIMENSION +1/2" (WHICHEVER IS GREATER), THICKNESS SAME AS BEAM FLANGE (1/2" MIN)
2. USE 5/8" DIA M.B. WHEN FLANGE = 4"

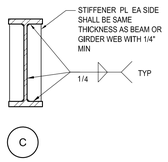

6 TYPICAL BEAM TO COLUMN

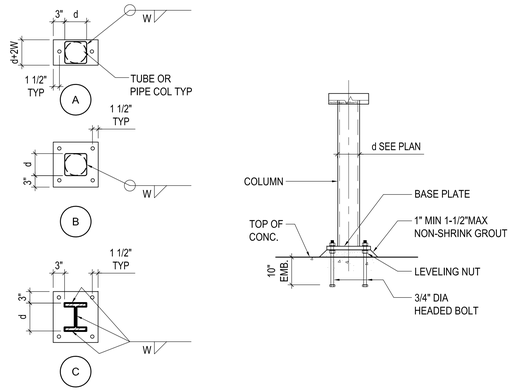

SCHEDULE		
MEMBER SIZE d	PLATE THICKNESS	WELD "w"
LESS THEN 4"	5/8"	1/4"
4-1/4" TO 6"	3/4"	1/4"
6-1/4" TO 8"	1"	5/16"
8-1/4" TO 12"	1-1/4"	5/16"
12-1/4" TO 16"	1-1/2"	3/8"

7 TYPICAL COL BASE PLATE

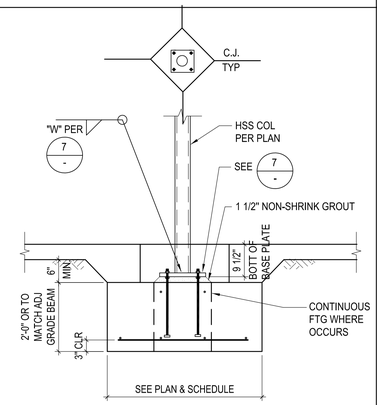

9 FOOTING AT STEEL COLUMN

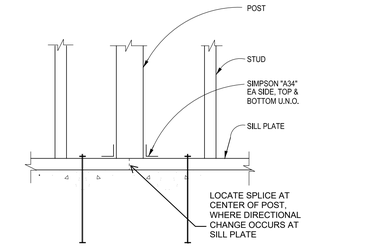

10 TYPICAL WOOD POST TO SILL PLATE

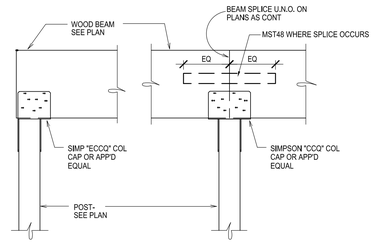

11 BEAM TO POST CONNECTION

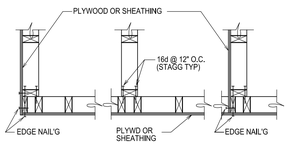

NOTE:
PROVIDE 3 x STUD OR POST AS REQ'D.

12 WALL INTERSECTIONS

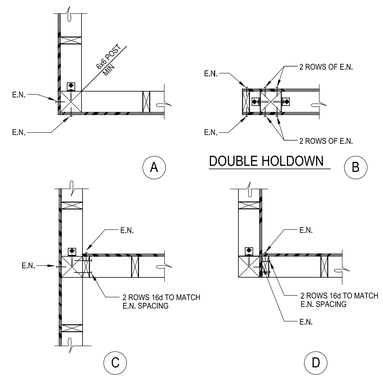

13 HOLDOWNS AT INTERSECTIONS

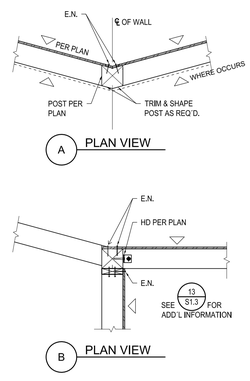

14

HOLDOWN OF	1/4x2.5 SDS @ POST	ANCHOR	CONC. MIN. STRENGTH (PSI)	MIN. EMBED. Le	"F" MIN.	POST SIZE U.N.O	(ASD) MAX. CAP
HDU2	6	5/8"Ø PAB5	3000	12"	18"	4x	2460 LBS
HDU5	14	5/8"Ø PAB5	3000	16"	18"	4x	4516 LBS
HDU11	30	1"Ø	3000	18"	48"	6x	7628 LBS
HDU14	36	1"Ø	3000	18"	48"	6x	11556 LBS

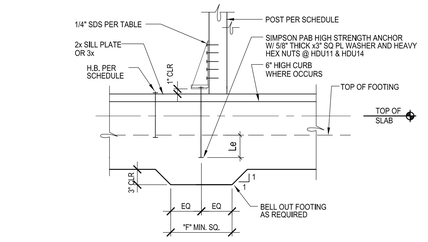

15 TYP HOLDOWN AT NEW FOUNDATION

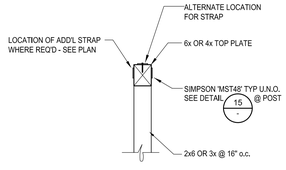

* SEE DETAIL 11/S1.2 FOR NON-BEARING WALL TOP PLATE SPLICE DETAIL

16 BEAM TO POST CONNECTION

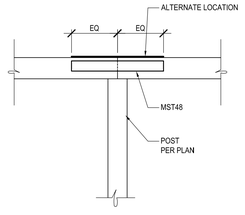

17 BEAM TO POST CONNECTION

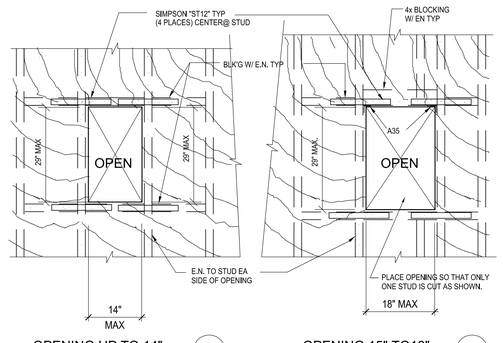

NOTES:
1. PLACE OPENINGS BETWEEN STUDS AS INDICATED ON DETAIL "A". WHEN WIDTH OF OPENING EXCEEDS 14" USE DETAIL "B".
2. NO MORE THAN ONE OPENING IS PERMITTED IN EVERY 20'-0".
3. PROVIDE E.N. TO STUD AND BLK'G AROUND OPENING.
4. NO OPENING SHALL BE PLACED IN SHEAR WALL LESS THAN 20'-0".

18 SMALL OPENING IN SHEAR WALL

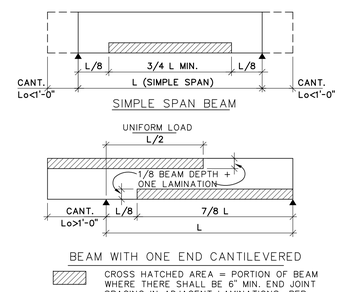

19 GLU LAM BEAM LAMINATION CRITERIA

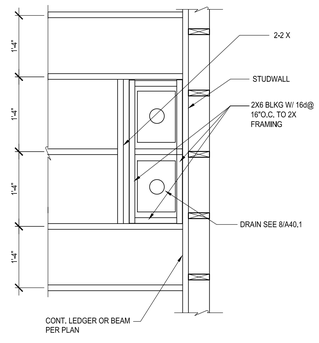

20 FRAMING AT ROOF DRAIN

WSI
WELSH STRUCTURES, INC.
12722 BARRETT LANE
SANTA ANA, CA 92705
PH: 714-734-0297
JN: 19-034
Consultant

WSI studiowc
ARCHITECTURE + ENGINEERING
515 Encinitas Blvd., Ste. 201, Encinitas, California 92024
Telephone: (760)753-6800 Fax: (760)452-7541

IDENTIFICATION STAMP
DIV. OF THE STATE ARCHITECT
APP. 04-118693 INC:
REVIEWED FOR
SS ☑ FLS ☑ ACS ☑
DATE: 03.13.2020

Revison	Date

Date: JAN 23, 2020

Engineer

LICENSED ARCHITECT
ROBERT D. WEBB
C-28036
RENEWAL DATE OCTOBER 31, 2021
STATE OF CALIFORNIA

CHET F. HARRITT ELEM. SCHOOL
LRC & CLASSROOM ADDITION
SANTEE SCHOOL DISTRICT

TYPICAL DETAILS

Job: IUSD-MPES-02

S1.3

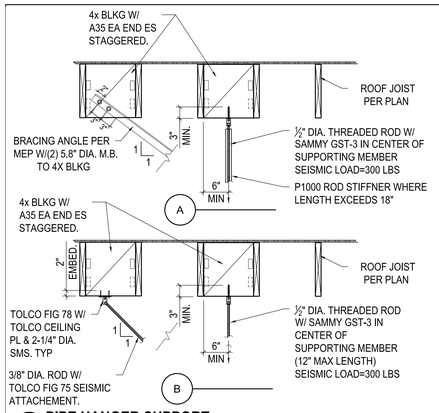

1 **PIPE HANGER SUPPORT**
3/4"= 1'-0"

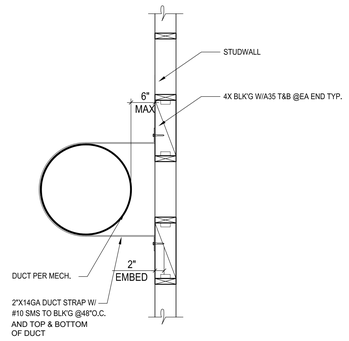

2 **PLAN VIEW@DUCT BRACING TO WALL**
3/4"= 1'-0"

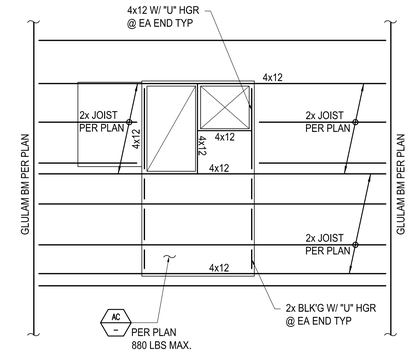

5 **TYPICAL FRAMING @ HVAC UNIT**
1/2"= 1'-0"

WATERPROOFING AND DRAINAGE

1. THE WALL SHALL BE WATERPROOFED WITH SLATEX OR APPROVED EQUAL
2. A DRAINAGE BLANKET OF CLEAN SAND (EXPANSION INDEX LESS THAN 20) SHALL BE INSTALLED BEHIND THE WALL TO WITHIN 1 FOOT OF THE TOP OF THE WALL AND EXTEND A HORIZONTAL DISTANCE EQUAL TO 1 FT/ MINIMUM AT THE BASE, A PERFORATED 4 INCH DIAMETER PIPE EMBEDDED IN A 1 FOOT SQUARE, 3/4 INCH DRAINAGE ROCK MATERIAL WHICH IS WRAPPED IN FILTER FABRIC SHALL BE INSTALLED AT THE BASE OF THE WALL. AT LEAST 3 INCHES OF GRAVEL SHOULD BE PLACED BENEATH THE PIPE. DRAIN PIPE SHOULD HAVE A MINIMUM GRADIENT OF ONE PERCENT TOWARD THE DRAIN OUTLET. PLACE PERFORATIONS DOWNWARD. DRAINAGE SYSTEM TO BE FREE-DRAINING AND UN OBSTRUCTED.
3. ALL RETAINING WALL BACKFILL SHOULD BE COMPACTED IN HORIZONTAL LIFTS OF 6" TO AT LEAST 90 PERCENT OR MORE OF THE LABORATORY MAXIMUM DRY DENSITY.

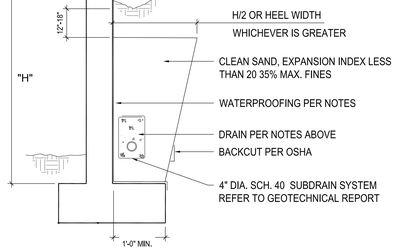

11 **RET WALL**
3/4"= 1'-0"

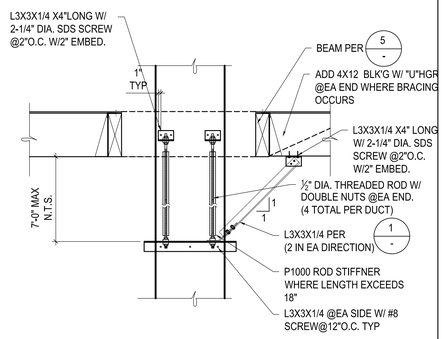

7 **DUCT SUPPORT DETAIL**
3/4"= 1'-0"

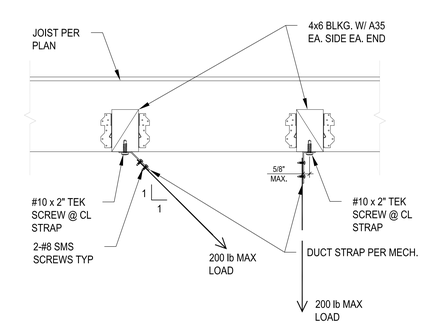

15 **DUCT STRAPS TO FRAMING**
1 1/2" = 1'-0"

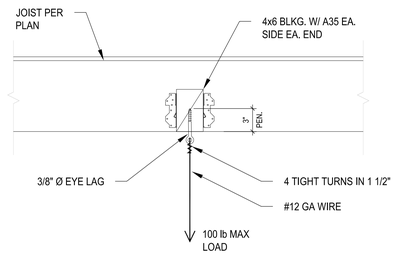

16 **HANGER WIRE TO FRAMING**
1 1/2" = 1'-0"

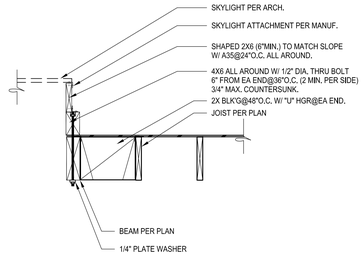

17 **SKYLIGHT DETAIL**

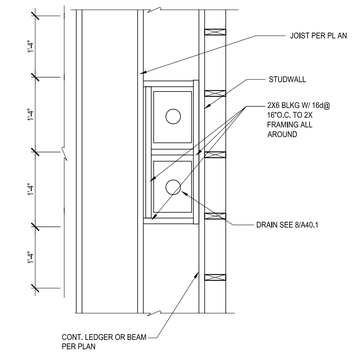

20 **FRAMING AT ROOF DRAIN**

IDENTIFICATION STAMP
DIV. OF THE STATE ARCHITECT
APP. 04-118693 INC:
REVIEWED FOR
SS ☑ FLS ☑ ACS ☑
DATE: 03.13.2020

Date JAN 23, 2020

Revison | Date

WSI
WELSH STRUCTURES, INC.
12722 BARRETT LANE
SANTA ANA, CA 92705
PH: 714-832-6297
JN: 19-034
Consultant

REGISTERED PROFESSIONAL ENGINEER
No. 29961
Exp. 9-30-20
CIVIL
STATE OF CALIFORNIA
Engineer

studiowc
ARCHITECTURE + ENGINEERING
515 Encinitas Blvd. Ste. 201, Encinitas, California 92024
Telephone: (760)753-6800 Fax: (760)452-7541

LICENSED ARCHITECT
ROBERT D. WEBB
C-28036
RENEWAL: OCTOBER 31, 2021
STATE OF CALIFORNIA

CHET F. HARRITT ELEM. SCHOOL
LRC & CLASSROOM ADDITION
SANTEE SCHOOL DISTRICT

TYPICAL DETAILS

Job:
IUSD-MPES-02

S1.4

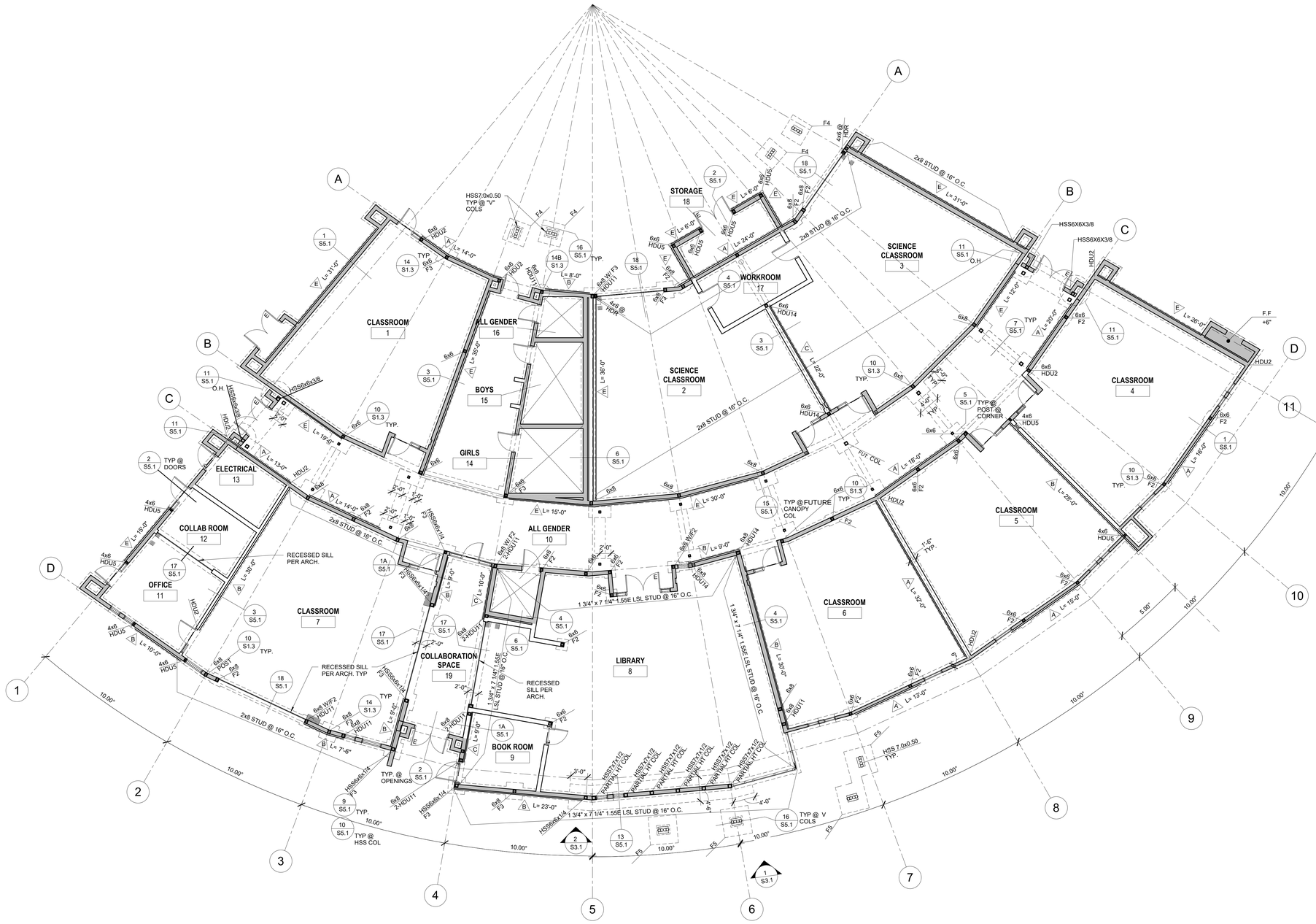

FOUNDATIONS NOTES:

1. FOR STRUCTURAL GENERAL NOTES AND TYPICAL DETAILS, REFER TO SHEET S0.1 THROUGH S1.4
2. INDICATES FINISH FLOOR ELEVATION
3. INDICATES CONTINUOUS FOOTING. SEE SECTION DETAIL FOR FOOTING THICKNESS AND REINFORCEMENT
4. INDICATES 6" (MIN) HIGH CONCRETE CURB
5. INDICATES BEARING AND / OR SHEAR WALL FTG
6. INDICATES SHEAR WALL. SEE DETAIL "6/S1.2" FOR SHEAR WALL SCHEDULE

   L= INDICATES PLYWOOD PANEL WHERE ACTUAL WALL IS LONGER THAN MINIMUM LENGTH SPECIFIED ON PLAN, EXTEND SHEAR PANEL & HOLDOWNS ACCORDINGLY.
7. SEE DETAIL "15/S1.3" FOR TYPICAL HOLDOWN DETAIL. (H.D.AS NOTED ON PLANS)
8. ALL HARDWARE TO BE "SIMPSON STRONG TIE" PRODUCT OR APPROVED EQUAL.
9. SEE ARCHITECTURAL DRAWINGS FOR DIMENSIONS NOT SHOWN. COORDINATE ALL POST-COLUMN HOLDOWNS, ETC., BASED ON ARCHTECTURAL DRAWINGS UNLESS NOTED OTHERWISE.
10. SOILS ENGINEER SHALL INSPECT AND APPROVE BOTTOM OF ALL FOUNDATIONS PRIOR TO CONTRACTOR PLACING REINFORCEMENT OR CONCRETE.
11. ALL EXTERIOR STUD WALLS (INCLUDING NON-SHEAR WALLS) SHALL BE COVERED W/ MIN. 1/2" THICK STRUCT I PLYWOOD FOR ARCH'L FINISH . OUTSIDE FACE OF PLYWOOD SHALL BE FLUSH WITH OUTSIDE FACE OF CONCRETE CURB. USE 8d NAILS @ 6" O.C. (EDGE) & 12" O.C. (FIELD) FOR ALL PLYWOOD U.N.O.
12. INDICATES TYPICAL 2 1/2" SLAB RECESS U.N.O. SEE ARCH'L PLAN FOR DETAIL
13. ALL CONCRETE SLAB ON GRADE SHALL BE MIN 5" THK WITH #4 @ 18" O.C. EACH WAY OVER 4" MIN PEA GRAVEL LAYER. PLACE MINIMUM 10 MIL VISQUEEN @ MID-DEPTH OF SAND LAYER, OVER 4" FREE DRAINING PEA GRAVEL LAYER COMPACTED TO 95%
14. F4 / 4 — INDICATES COLUMN MARK, SEE SCHEDULE FOR COLUMN SIZE
    INDICATES FOOTING MARK, SEE SCHEDULE FOR FOOTING SIZE
15. INDICATES STEPPED FOOTING. SEE DETAIL 6/S1.1
16. ALL STUD WALLS SHALL BE 6" WIDE W/ 2x6 STUD @ 16" O.C. PER 12/S1.2 U.O.N. ON PLAN
17. INDICATES DRAIN. VERIFY SIZE AND LOCATION W/ ARCH'L PLAN. REFER TO DETAIL 14/S1.1 FOR PIPE THROUCH FOOTING DETAIL

FOOTING SCHEDULE			
MARK	PAD FOOTING *		REINFORCEMENT (BOTTOM)
	W	H	
F2	2'-0" SQ.	24"	3-#4 EA. WAY
F3	3'-0" SQ.	24"	3-#5 EA. WAY
F4	4'-0" SQ.	24"	4-#6 EA. WAY
F5	5'-0" SQ.	24"	5-#6 EA. WAY
F6	6'-0" SQ.	24"	6-#6 EA. WAY

*FOOTING THICKNESS TO MATCH ADJ. GRADE BEAM

IDENTIFICATION STAMP
DIV. OF THE STATE ARCHITECT
APP. 04-118693 INC:
REVIEWED FOR
SS ☑ FLS ☑ ACS ☑
DATE: 03.13.2020

Revison	Date
1	JAN 23, 2020

WSI
WELSH STRUCTURES, INC.
12722 BARRETT LANE
SANTA ANA, CA 92705
(949) 515-4297
JN: 19-054
Consultant

Engineer

studiowc
ARCHITECTURE + ENGINEERING
515 Encinitas Blvd, Ste 201 Encinitas, California 92024
Telephone: (760) 525-8000 Fax: (760) 452-7641

LICENSED ARCHITECT
ROBERT D. WEBB
C-28036
OCTOBER 31, 2021
STATE OF CALIFORNIA

CHET F. HARRITT ELEM. SCHOOL
LRC & CLASSROOM ADDITION
SANTEE SCHOOL DISTRICT

FOUNDATION PLAN

Job: IUSD-MPES-02

S2.1

FOUNDATION PLAN | 1/8" = 1'-0" | 1

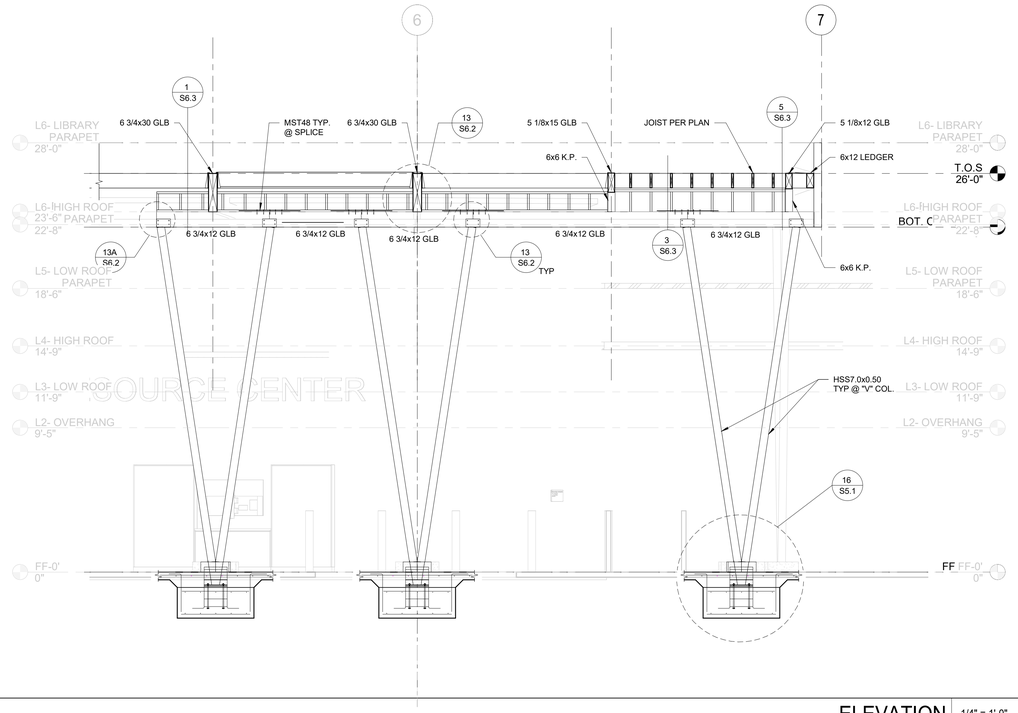

ELEVATION 1/4" = 1'-0" 1

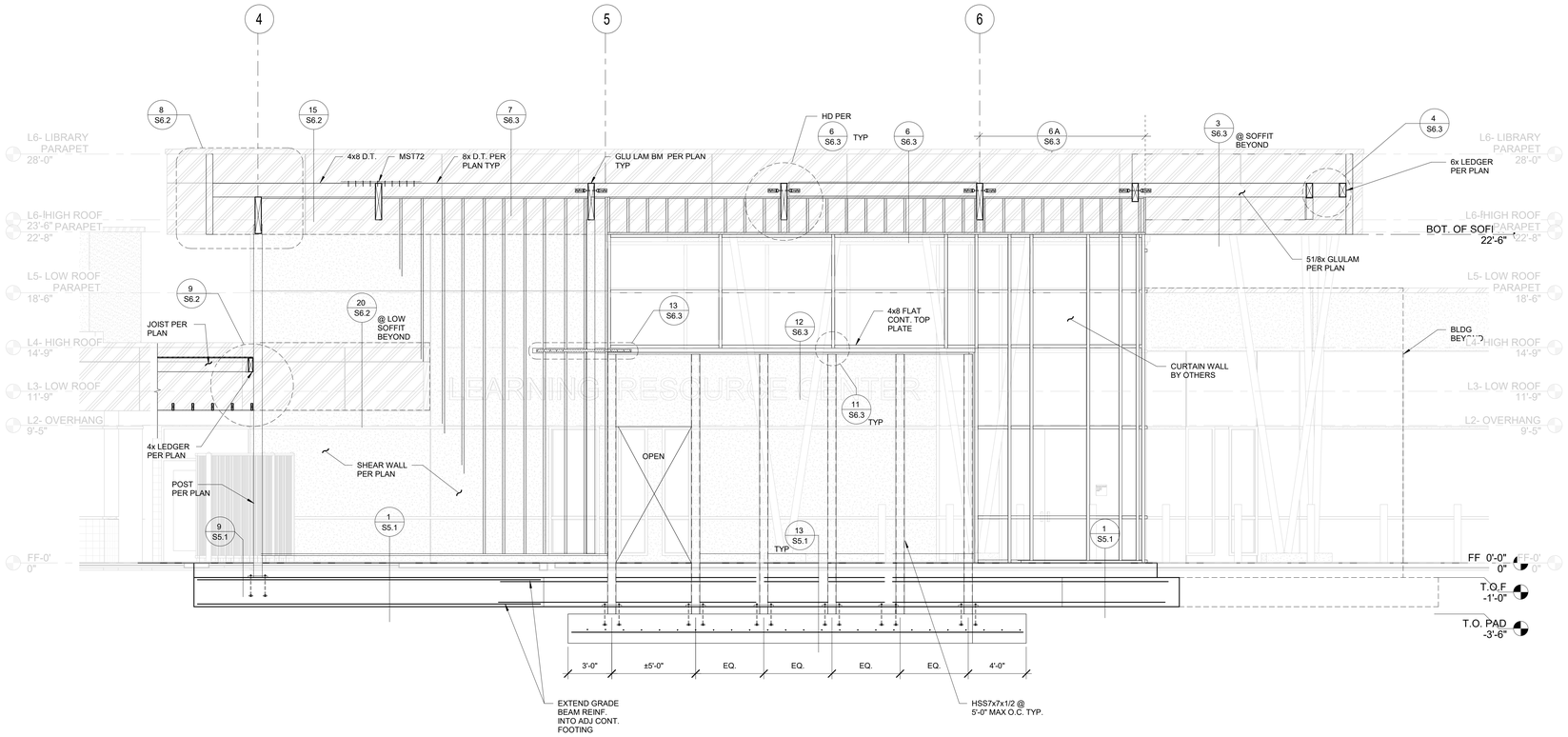

SOUTH ELEVATION @ LIBRARY 1/4" = 1'-0" 2

IDENTIFICATION STAMP
DIV. OF THE STATE ARCHITECT
APP. 04-118693 INC:
REVIEWED FOR
SS ☑ FLS ☑ ACS ☑
DATE: 03.13.2020

Date: JAN 23, 2020

Revison | Date

WSI
WELSH STRUCTURES, INC.
12722 BARRETT LANE
SANTA ANA, CA 92705
PH: 714-352-6297
JN.: 19-034

Consultant

Engineer

studiowc
ARCHITECTURE + ENGINEERING
515 Encinitas Blvd, Ste. 201, Encinitas, California 92024
Telephone: (760)753-6800 Fax: (760)452-7541

LICENSED ARCHITECT
ROBERT D. WEBB A.I.A.
C-28036
OCTOBER 31, 2021
STATE OF CALIFORNIA

CHET F. HARRITT ELEM. SCHOOL
LRC & CLASSROOM ADDITION

SANTEE SCHOOL DISTRICT

BUILDING ELEVATIONS

Job: IUSD-MPES-02

S3.1

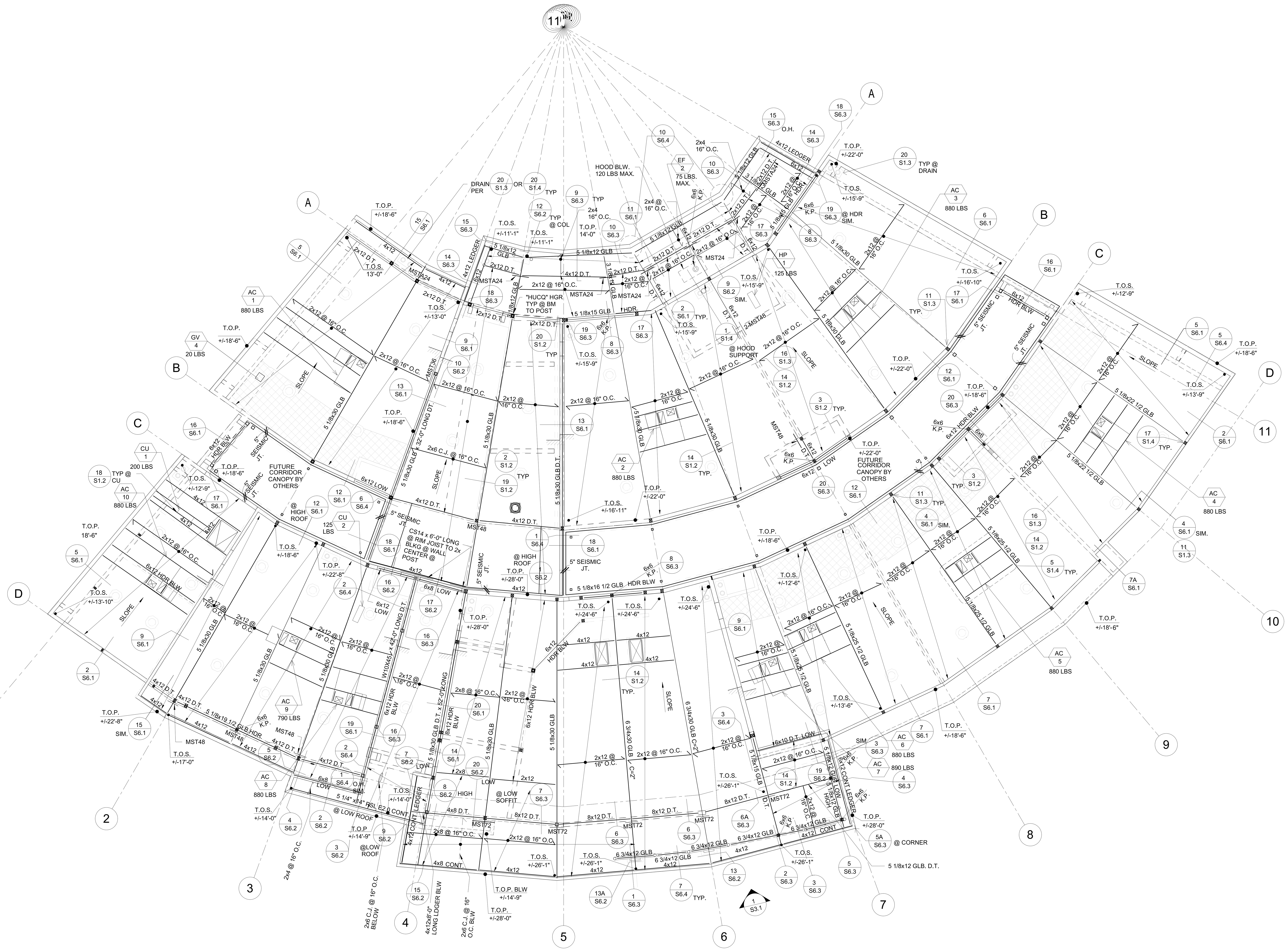

ROOF FRAMING PLAN | 1/8" = 1'-0" | 1

ROOF FRAMING NOTES:

1. FOR STRUCTURAL GENERAL NOTES AND TYPICAL DETAILS, REFER TO SHEETS S0.1 THROUGH S1.4.
2. SEE GENERAL NOTE ON SHEET S0.1 FOR DESIGN ROOF LIVE LOAD.
3. ○○ INDICATES ROOF DRAIN LOCATION. COORDINATE WITH ARCHITECTURAL ROOF PLAN. USE 2-JOIST @ DRAIN/OVERFLOW PER 20/S1.3.
4. SEE DETAIL 15/S1.2 FOR TYPICAL FRAMING AT ROOF OPENING UNLESS NOTED OTHERWISE.
5. SEE DETAIL 19/S1.2 FOR BLOCKING BETWEEN ROOF JOISTS.
6. D.T. DENOTES STRUT MEMBER, ALL STRUT LINES TO RECEIVE BOUNDARY NAILING.
7. SEE 17/S1.2, 18/S1.2 & 5/S1.4 FOR FRAMING @ MECHANICAL UNITS.
8. C= DENOTES CAMBER ON GLULAM BEAM
9. ALL PLYWOOD SHEATHING SHALL EXTEND TO ROOF SHEATHING AND/OR FRAMING.
10. ALL HARDWARE TO BE "SIMPSON STRONG TIE" PRODUCT OR A APPROVED EQUIVALENT.
11. SEE ARCHITECTURAL DRAWINGS FOR DIMENSIONS NOT SHOWN. COORDINATE ALL POST-COLUMN BASED ON ARCHITECTURAL DRAWINGS UNLESS NOTED OTHERWISE.
12. ROOF SHEATHING SHALL BE 1/2" THICK STRUCT I PLYWOOD AND NAIL WITH 10d NAILS @ 4"O.C.(E), 4"O.C. (B), AND 12"O.C. (F) UNLESS NOTED OTHERWISE. BLOCK ALL EDGES. SEE 4/S1.2
13. FOR NON-BEARING INT. WALL, SEE DETAIL 2/S1.2 & 3/S1.2
14. SEE 9/S1.2 FOR HEADER SIZES NOT SHOWN
15. (-) INDICATES SHEAR WALL SEE DETAIL "6/S1.2" FOR SHEAR WALL SCHEDULE
    L= INDICATES PLYWOOD PANEL WHERE ACTUAL WALL IS LONGER THAN MINIMUM LENGTH SPECIFIED ON PLAN. EXTEND SHEAR PANEL & HOLDOWNS ACCORDINGLY
16. PHOTOVOLTAIC PANELS WILL NEED TO BE SUBMITTED UNDER A SEPARATE DSA APPLICATION NUMBER AS AN ALTERATION TO BUILDING. MASS OF Ø PSF HAS BEEN TAKEN INTO BUILDING DESIGN PER 2016 CBC 1603A.1.8.1

IDENTIFICATION STAMP
DIV. OF THE STATE ARCHITECT
APP. 04-118693 INC:
REVIEWED FOR
SS ☑ FLS ☑ ACS ☑
DATE: 03.13.2020

Date: JAN 23, 2020

Revison | Date

WSI
WELSH STRUCTURES, INC.
12722 BARRETT LANE
SANTA ANA, CA 92705
PH: 714-352-6297
J.N.: 19-034

Consultant

REGISTERED PROFESSIONAL ENGINEER No. 2998 Exp. 6-30-20 STRUCTURAL STATE OF CALIFORNIA

Engineer

studioWC
ARCHITECTURE + ENGINEERING
515 Encinitas Blvd. Ste. 201, Encinitas, California 92024
Telephone: (760)753-6800 Fax: (760)452-7541

LICENSED ARCHITECT ROBERT D. WEBB A.I.A. C-28036 OCTOBER 31, 2021 STATE OF CALIFORNIA

CHET F. HARRITT ELEM. SCHOOL
LRC & CLASSROOM ADDITION
SANTEE SCHOOL DISTRICT

ROOF FRAMING PLAN

Job: IUSD-MPES-02

S4.1

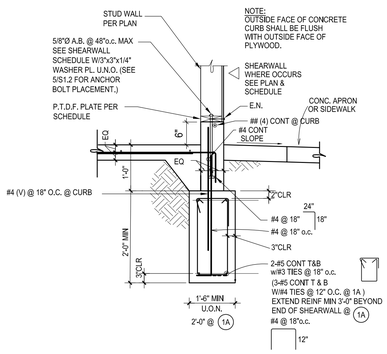

1 1A EXTERIOR STUD WALL FOOTING

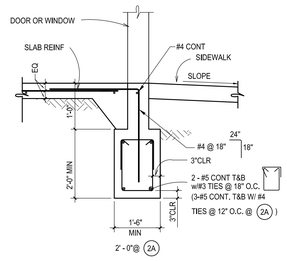

2 2A FOOTING @ DOOR OPENINGS

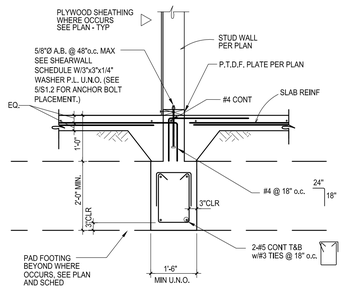

3 INTERIOR STUD WALL FTG

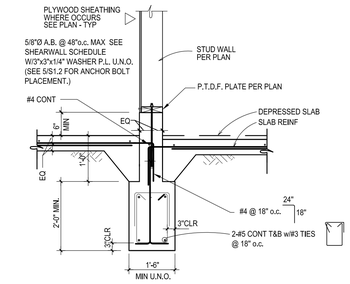

4 INTERIOR STUD WALL AT CURB

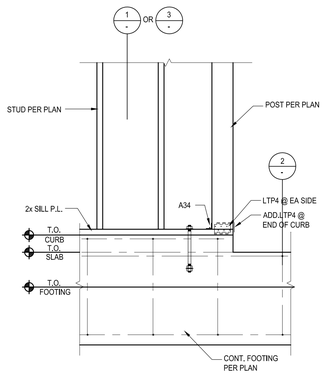

5 POST @ SLAB

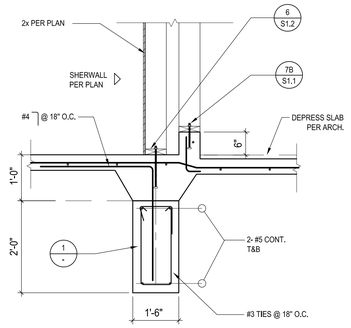

6 DETAIL

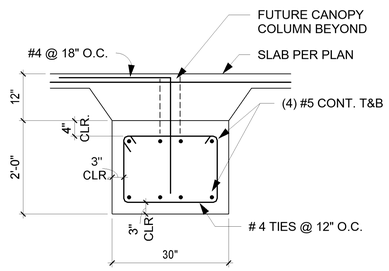

DETAIL
3/4"= 1'-0"

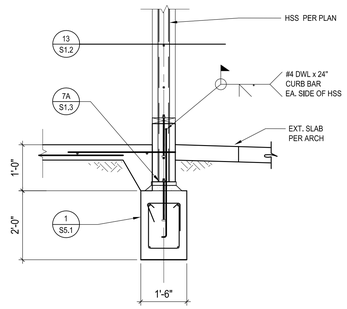

8 DETAIL

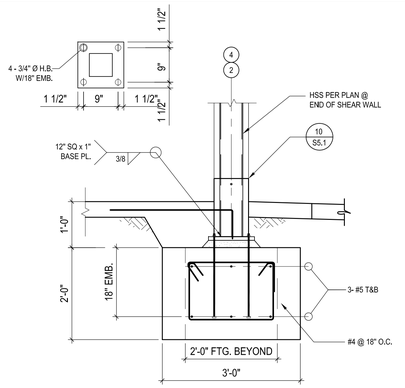

9 DETAIL

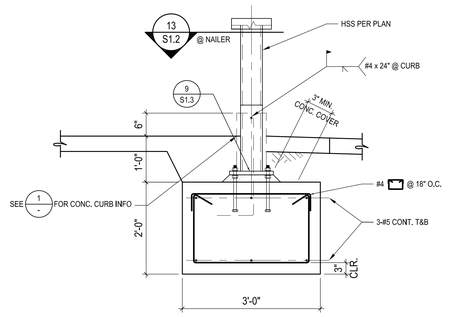

10 DETAIL

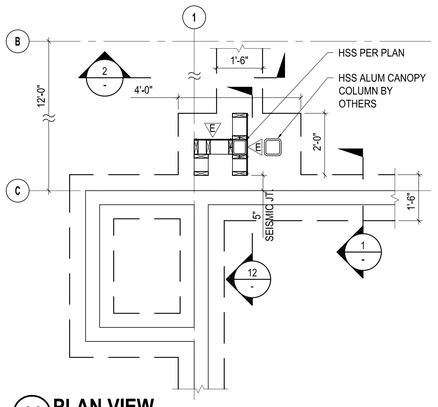

11 PLAN VIEW

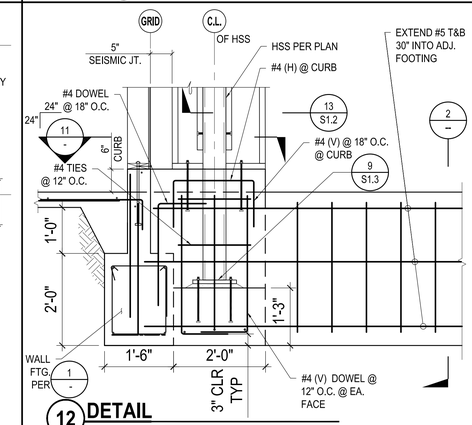

12 DETAIL

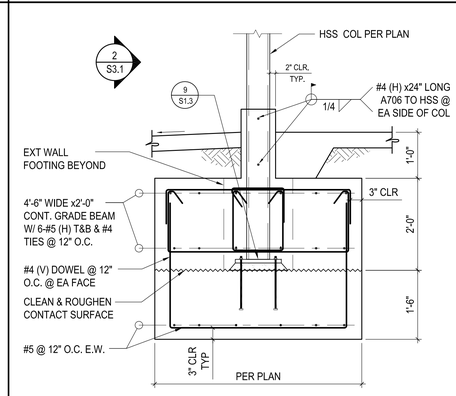

13 DETAIL

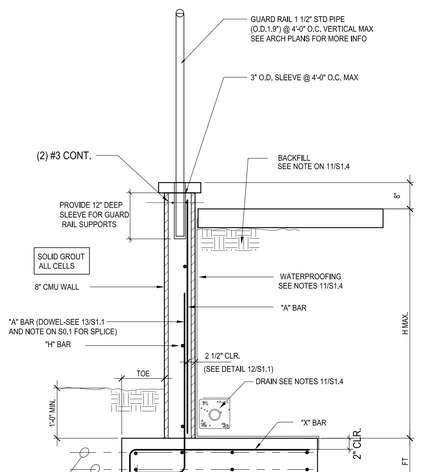

RETAINING WALL SCHEDULE

H max.	FT	FW	TOE	"X" BAR	"A" BAR	"H" BAR
2'-8"	1'-3"	2'-6"	6"	#4@16"o.c.	#4@16"o.c.	#4@24"o.c.
4'-0"	1'-3"	3'-0"	6"	#5@16"o.c.	#4@16"o.c.	#4@24"o.c.
6'-0"	1'-3"	4'-0"	6"	#5@16"o.c.	#5@16"o.c.	#4@24"o.c.

19 RETAINING WALL DETAIL

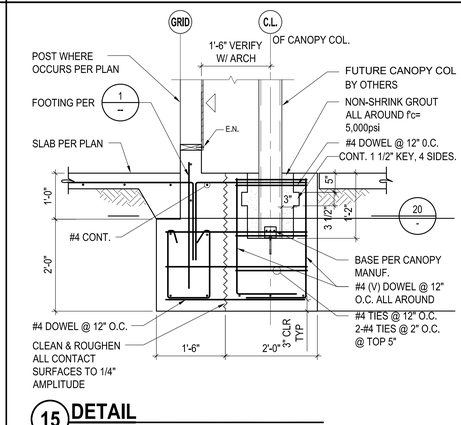

15 DETAIL

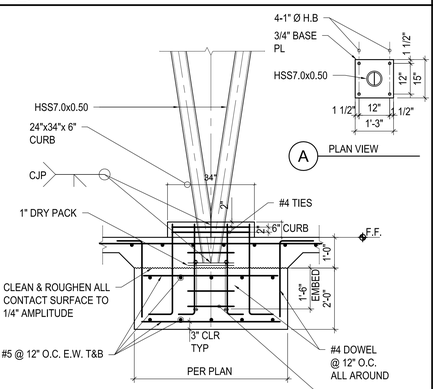

16 DETAIL

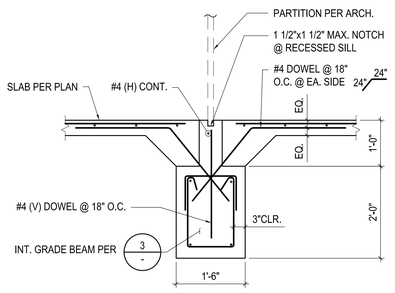

17 DETAIL

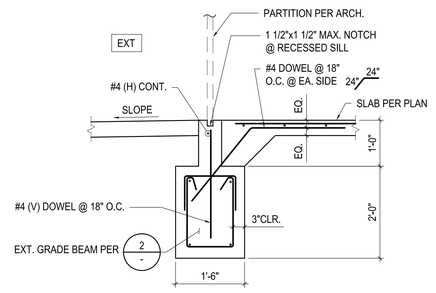

18 DETAIL

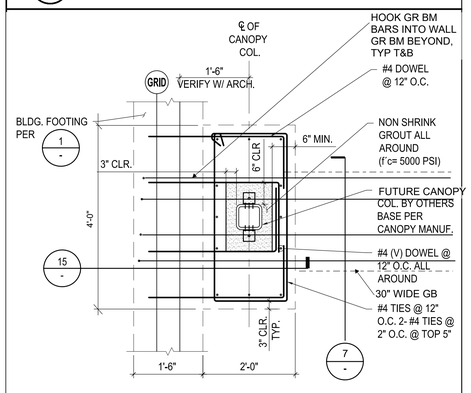

20 PLAN VIEW

IDENTIFICATION STAMP
DIV. OF THE STATE ARCHITECT
APP. 04-118693 INC:
REVIEWED FOR
SS ☑ FLS ☑ ACS ☑
DATE: 03.13.2020

Revison	Date
	JAN 23, 2020

WSI
WELSH STRUCTURES, INC.
12722 BARRETT LANE
SANTA ANA, CA 92705
PH: 714-832-6297
JN: 19-034
Consultant

STRUCTURAL ENGINEER
No. 2998
Exp. 9-30-20
REGISTERED PROFESSIONAL ENGINEER
STATE OF CALIFORNIA
Engineer

studiowc
ARCHITECTURE + ENGINEERING
515 Encinitas Blvd. Ste. 201, Encinitas, California 92024
Telephone: (760)753-6800 Fax: (760)452-7541

LICENSED ARCHITECT
ROBERT D. WEBB
R D Webb
C-28036
RENEWAL OCTOBER 31, 2021
STATE OF CALIFORNIA

CHET F. HARRITT ELEM. SCHOOL
LRC & CLASSROOM ADDITION
SANTEE SCHOOL DISTRICT

FOUNDATION DETAILS

Job:
IUSD-MPES-02

S5.1

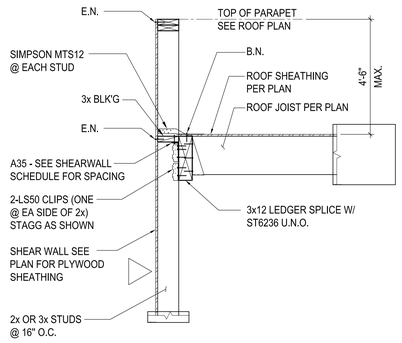

1 DETAIL
3/4"= 1'-0"

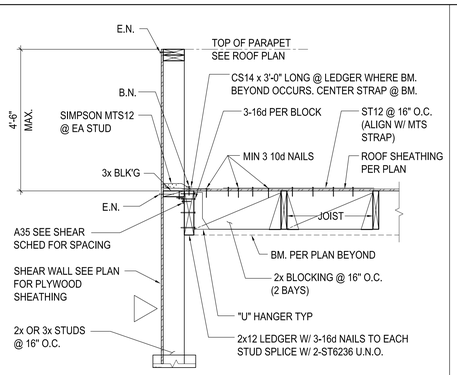

2 DETAIL
3/4"= 1'-0"

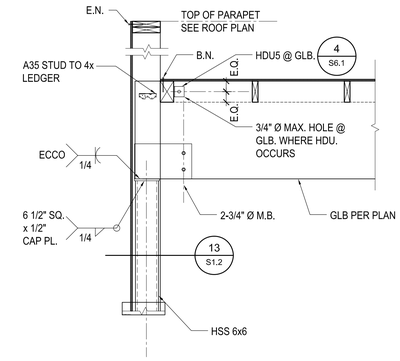

3 DETAIL
3/4"= 1'-0"

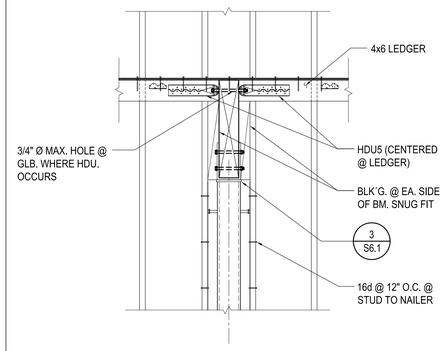

4 DETAIL
3/4"= 1'-0"

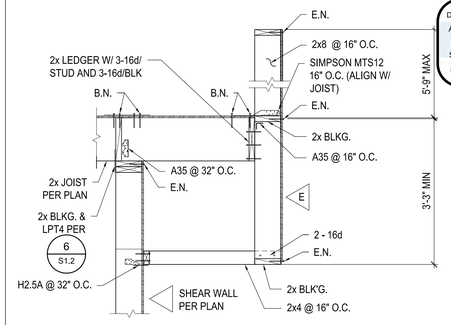

5 PARAPET SECTION
3/4"= 1'-0"

IDENTIFICATION STAMP
DIV. OF THE STATE ARCHITECT
APP. 04-118693 INC:
REVIEWED FOR
SS ☑ FLS ☑ ACS ☑
DATE: 03.13.2020

Revison	Date
	JAN 23, 2020

WSI
WELSH STRUCTURES, INC.
12722 BARRETT LANE
SANTA ANA, CA 92705
PH: 714-832-6297
FAX: 714-832-6297
Consultant

studiowc
ARCHITECTURE + ENGINEERING
515 Encinitas Blvd. Ste. 201, Encinitas, California 92024
Telephone: (760)753-6800 Fax: (760)452-7241

CHET F. HARRITT ELEM. SCHOOL
LRC & CLASSROOM ADDITION
SANTEE SCHOOL DISTRICT

FRAMING DETAILS

Job:
IUSD-MPES-02

S6.1

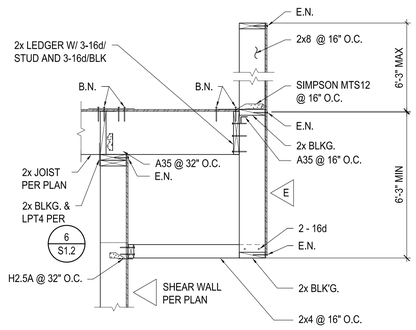

6 PARAPET SECTION
3/4"= 1'-0"

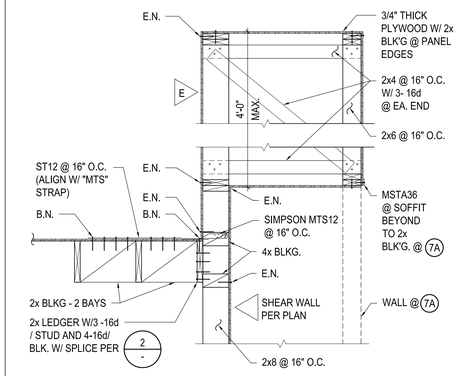

7A 7 DETAIL
3/4"= 1'-0"

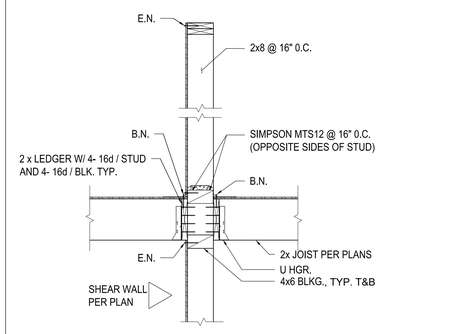

8 WALL SECTION
3/4"= 1'-0"

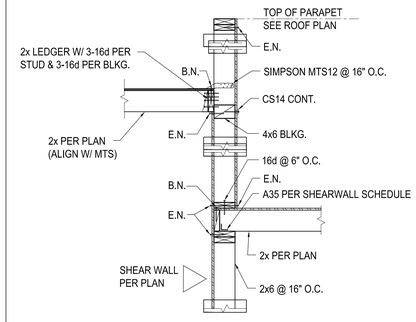

9 DETAIL
3/4"= 1'-0"

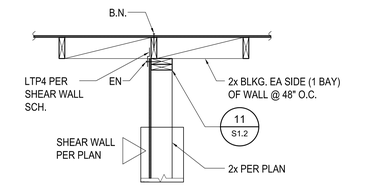

10 DETAIL
3/4"= 1'-0"

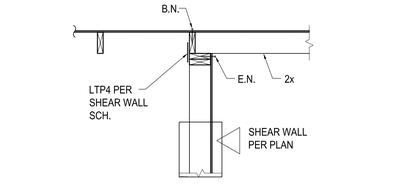

11 DETAIL
3/4"= 1'-0"

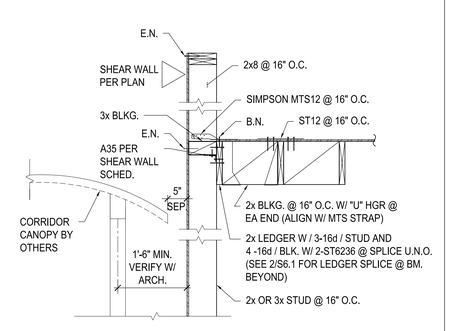

12 WALL SECTION
3/4"= 1'-0"

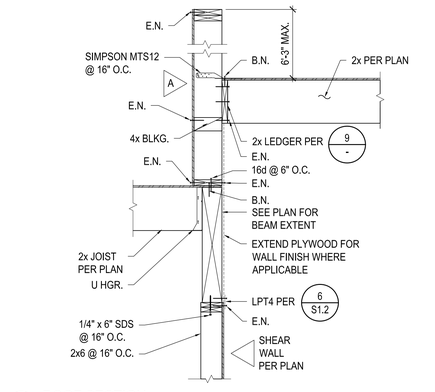

13 ROOF SECTION
3/4"= 1'-0"

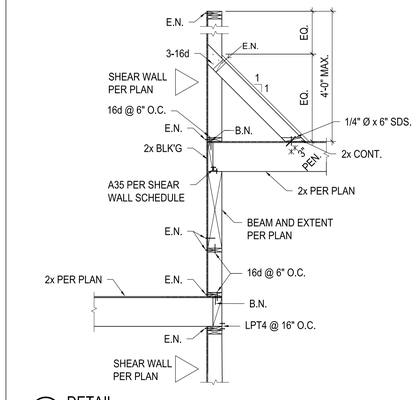

14 DETAIL
1/2"= 1'-0"

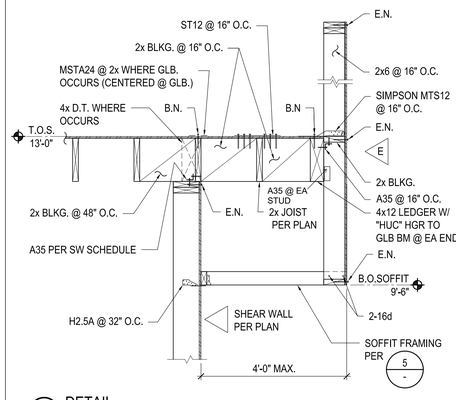

15 DETAIL
3/4"= 1'-0"

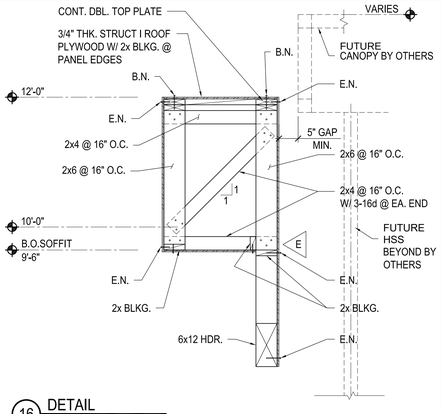

16 DETAIL
3/4"= 1'-0"

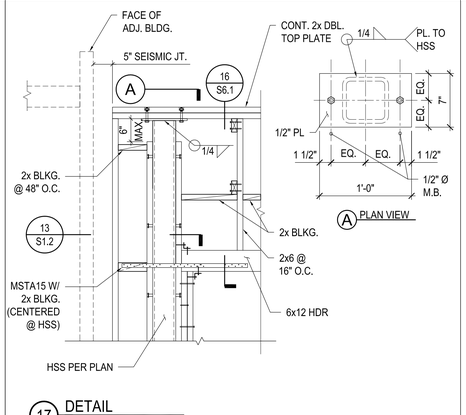

17 DETAIL
3/4"= 1'-0"

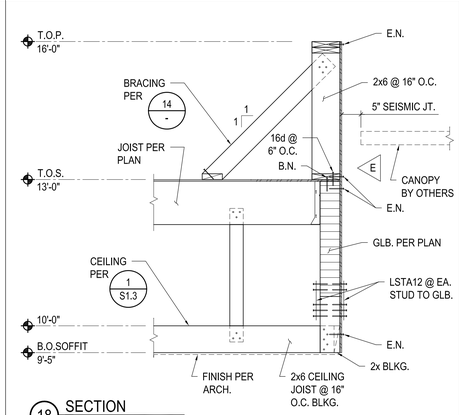

18 SECTION
3/4"= 1'-0"

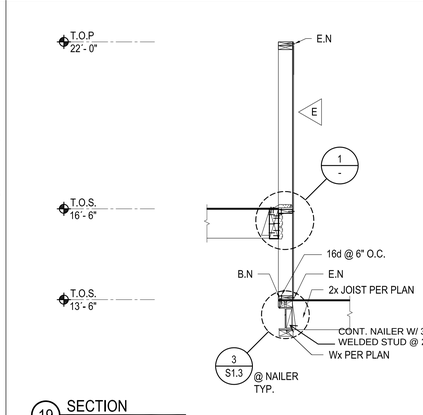

19 SECTION
1/2"= 1'-0"

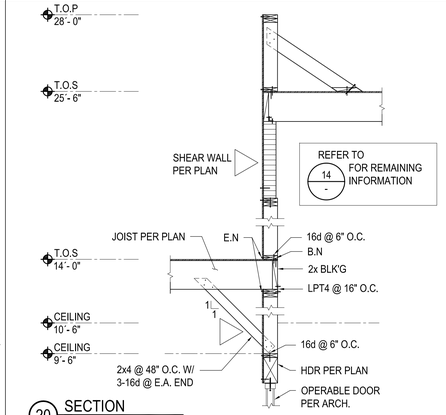

20 SECTION
1/2"= 1'-0"

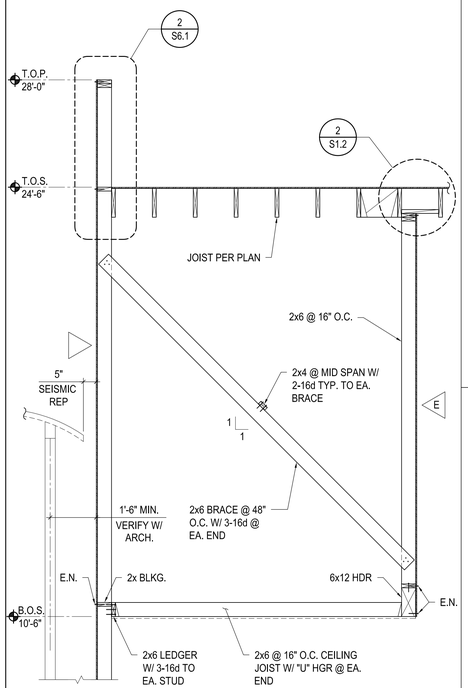

1 DETAIL 1/2"= 1'-0"

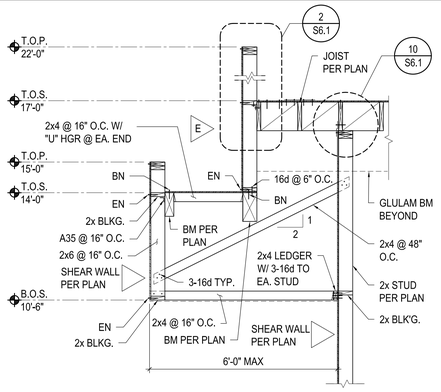

2 DETAIL 1/2"= 1'-0"

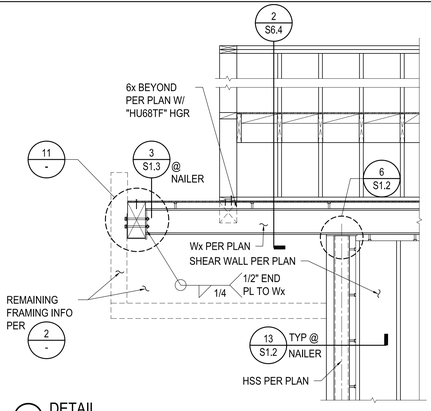

3 DETAIL 1/2"= 1'-0"

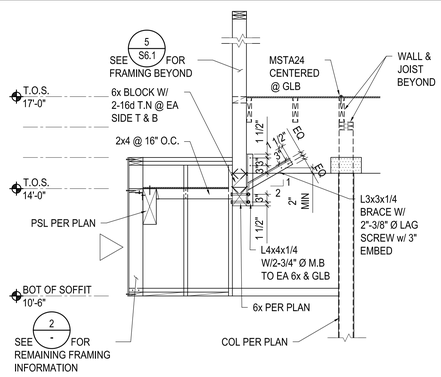

4 DETAIL 1/2"= 1'-0"

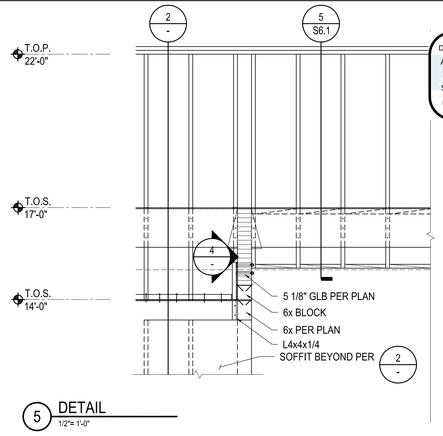

5 DETAIL 1/2"= 1'-0"

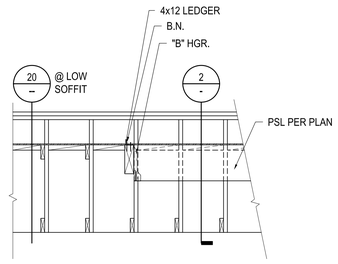

7 DETAIL 1/2"= 1'-0"

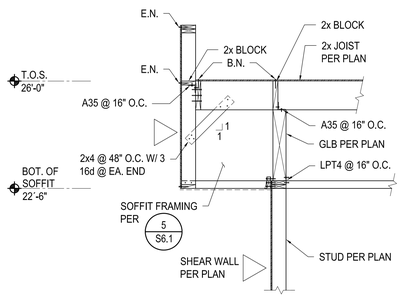

8 DETAIL 1/2"= 1'-0"

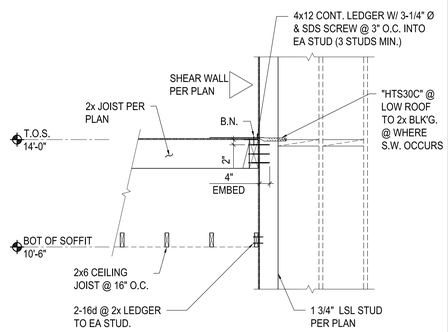

9 DETAIL 1/2"= 1'-0"

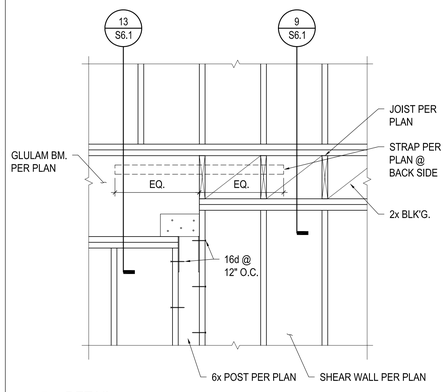

10 DETAIL 3/4"= 1'-0"

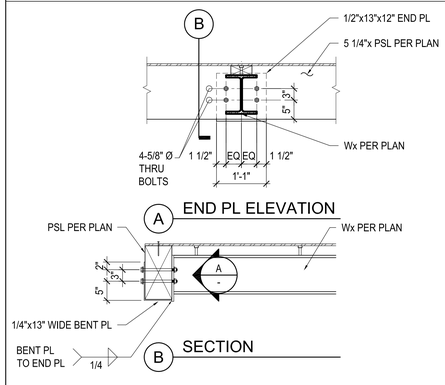

11 DETAIL 3/4"= 1'-0"

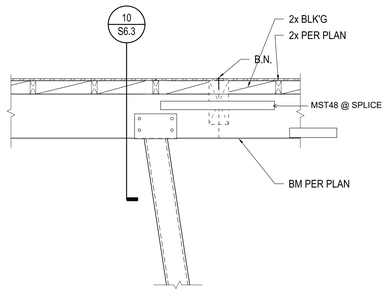

12 DETAIL 3/4"= 1'-0"

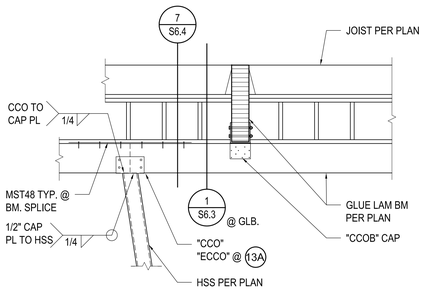

13 13A DETAIL 1/2"= 1'-0"

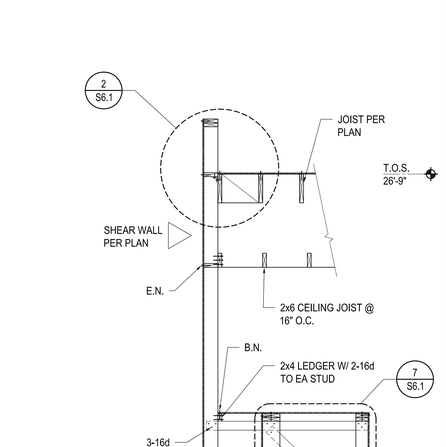

19 DETAIL 1/2"= 1'-0"

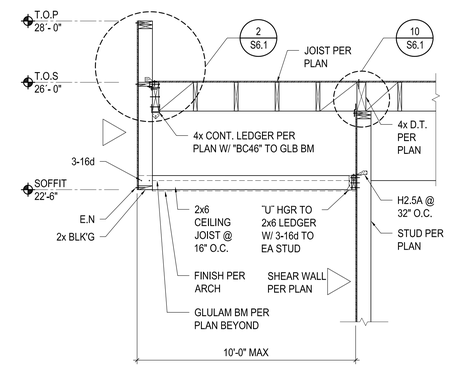

15 DETAIL 1/2"= 1'-0"

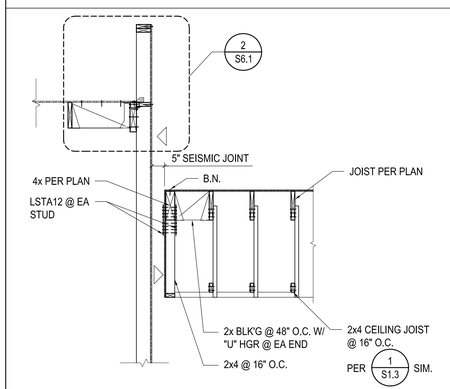

16 DETAIL 1/2"= 1'-0"

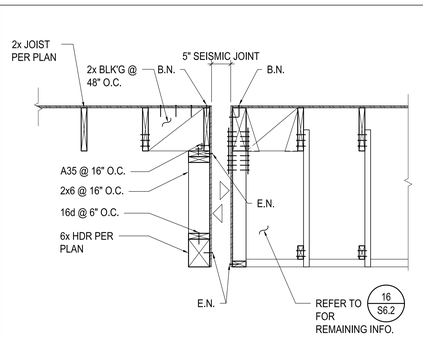

17 DETAIL 3/4"= 1'-0"

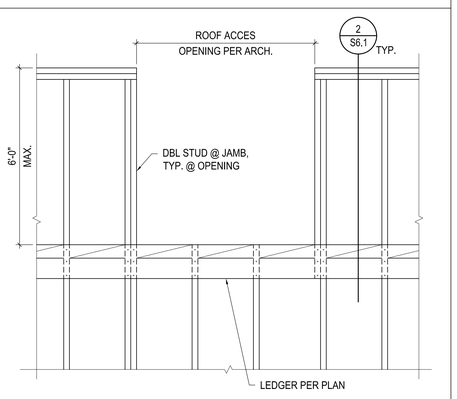

18 ROOF ACCESS OPENING ELEVATION 3/4"= 1'-0"

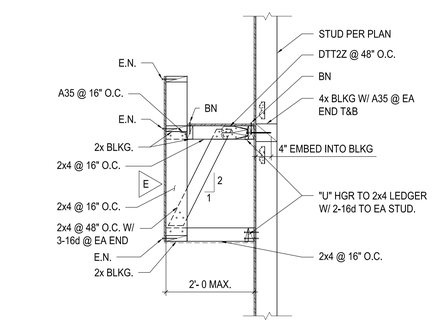

20 DETAIL 3/4"= 1'-0"

IDENTIFICATION STAMP
DIV. OF THE STATE ARCHITECT
APP. 04-118693 INC:
REVIEWED FOR
SS ☑ FLS ☑ ACS ☑
DATE: 03.13.2020

Date JAN 23, 2020
Revison
Date

WSI
WELSH STRUCTURES, INC.
12722 BARRETT LANE
SANTA ANA, CA 92705
PH: 714-832-6297
FAX: 714-832-6297
Consultant

PROFESSIONAL ENGINEER No. 2998 Exp. 9-30-20 STATE OF CALIFORNIA
Engineer

studiowc
ARCHITECTURE + ENGINEERING
515 Encinitas Blvd. Ste. 201, Encinitas, California 92024
Telephone: (760)753-6800 Fax: (760)452-7541

LICENSED ARCHITECT ROBERT D. WEBB R.D.Webb C-28036 OCTOBER 31, 2021 STATE OF CALIFORNIA

CHET F. HARRITT ELEM. SCHOOL
LRC & CLASSROOM ADDITION
SANTEE SCHOOL DISTRICT

FRAMING DETAILS

Job: IUSD-MPES-02

S6.2

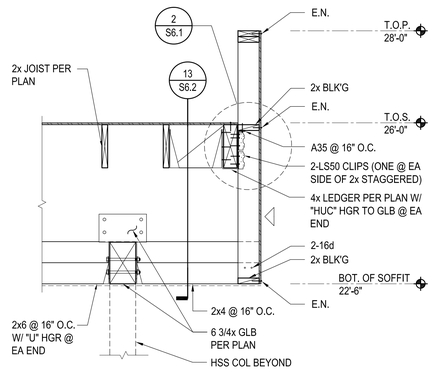

1 **DETAIL** 3/4"=1'-0"

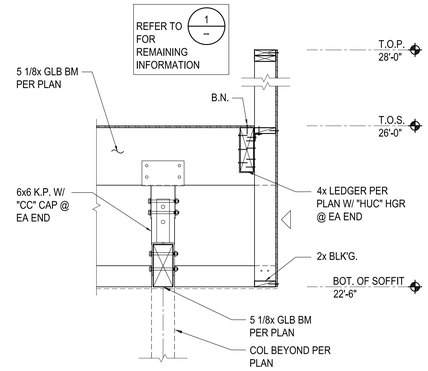

2 **DETAIL** 3/4"=1'-0"

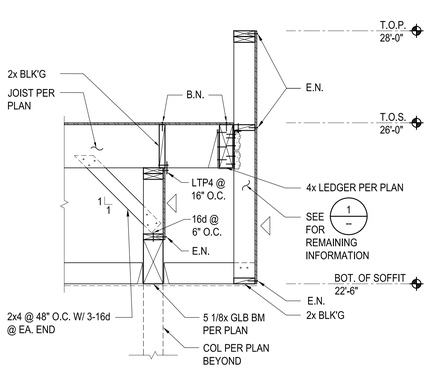

3 **DETAIL** 3/4"=1'-0"

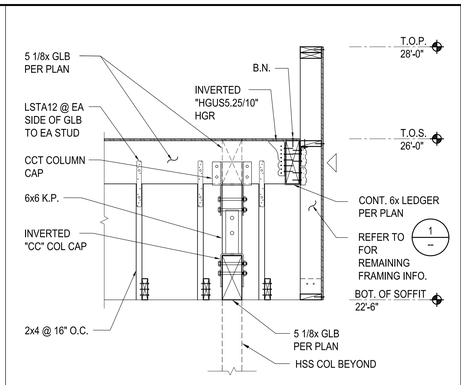

4 **DETAIL** 3/4"=1'-0"

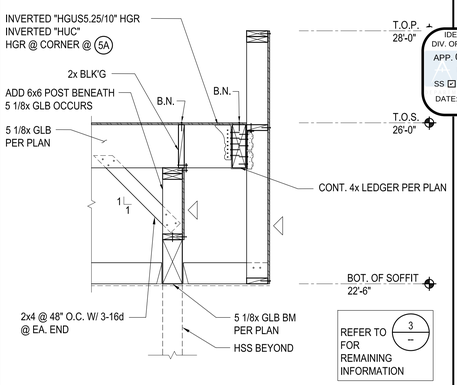

5 5A **DETAIL** 3/4"=1'-0"

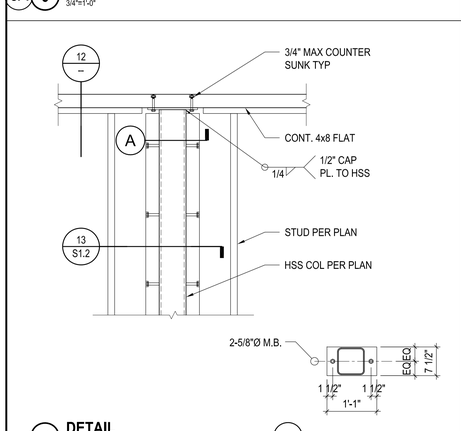

6A 6 **DETAIL** 3/4"=1'-0"

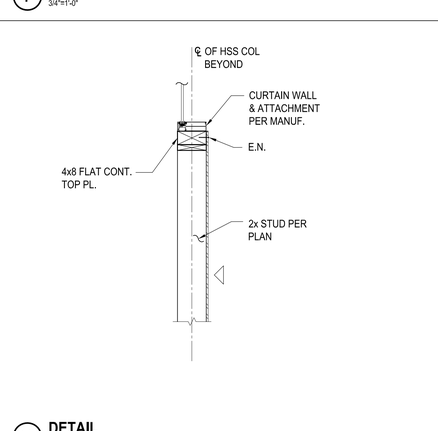

7 **DETAIL** 3/4"=1'-0"

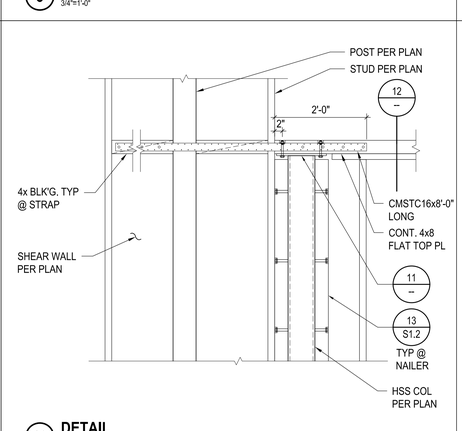

8 **DETAIL** 3/4"=1'-0"

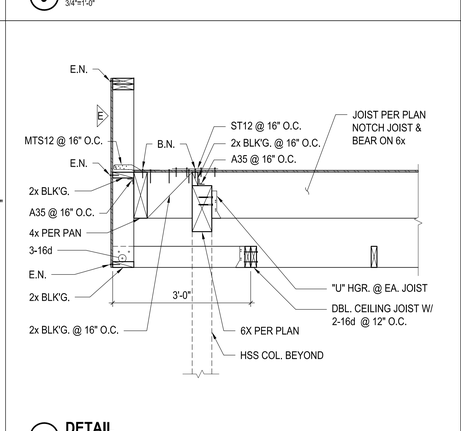

9 **DETAIL** 3/4"=1'-0"

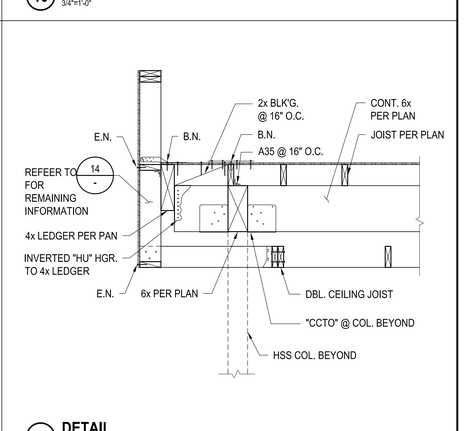

10 **DETAIL** 3/4"=1'-0"

11 **DETAIL** 3/4"=1'-0"

12 **DETAIL** 3/4"=1'-0"

13 **DETAIL** 3/4"=1'-0"

14 **DETAIL** 3/4"=1'-0"

15 **DETAIL** 3/4"=1'-0"

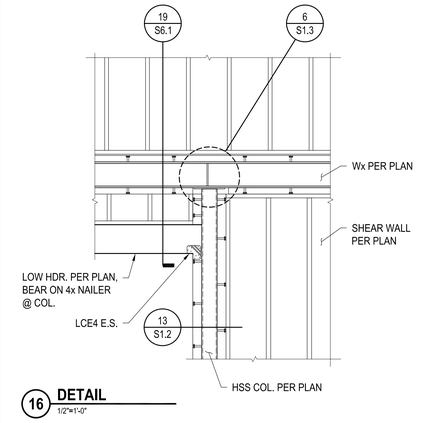

16 **DETAIL** 1/2"=1'-0"

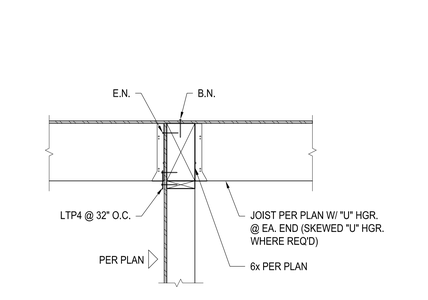

17 **DETAIL** 1/2"=1'-0"

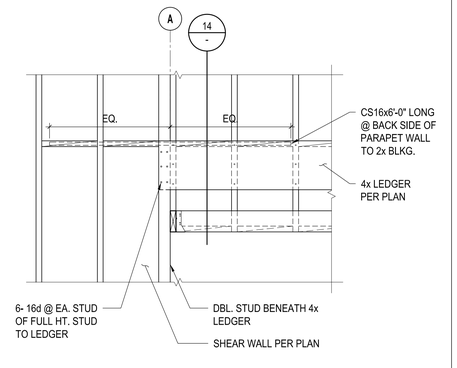

18 **DETAIL** 3/4"=1'-0"

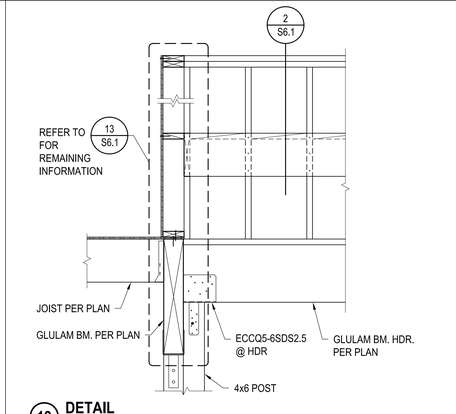

19 **DETAIL** 3/4"=1'-0"

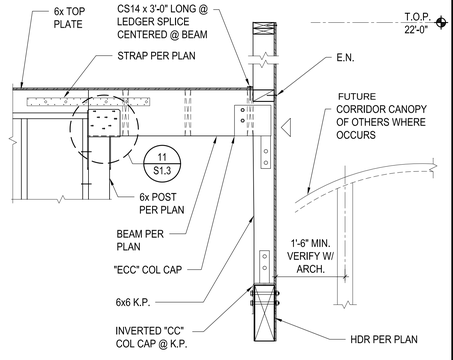

20 **DETAIL** 3/4"=1'-0"

IDENTIFICATION STAMP
DIV. OF THE STATE ARCHITECT
APP. 04-118693 INC:
REVIEWED FOR
SS ☑ FLS ☑ ACS ☑
DATE: 03.13.2020

Date: JAN 23, 2020

Revision | Date

WSI
WELSH STRUCTURES, INC.
12722 BARRET LANE
TUSTIN, CA 92705
PH: 714-352-6297
JN: 19-034
Consultant

ENGINEER ★ KIMBERLY ★ WELSH ★ No. 29968 ★ Exp. 6-30-20 ★ CIVIL ★ STATE OF CALIFORNIA
Engineer

studiowc
ARCHITECTURE + ENGINEERING
515 Encinitas Blvd. Ste. 201, Encinitas, California 92024
Telephone: (760)753-6800 Fax: (760)452-7541

LICENSED ARCHITECT ★ ROBERT D. WEBB R.A. ★ R D Webb C-28036 ★ OCTOBER 31, 2021 ★ STATE OF CALIFORNIA

CHET F. HARRITT ELEM. SCHOOL
LRC & CLASSROOM ADDITION
SANTEE SCHOOL DISTRICT

FRAMING DETAILS

Job: IUSD-MPES-02

S6.3

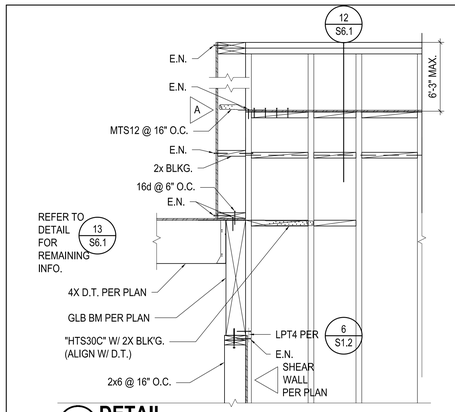

1 DETAIL

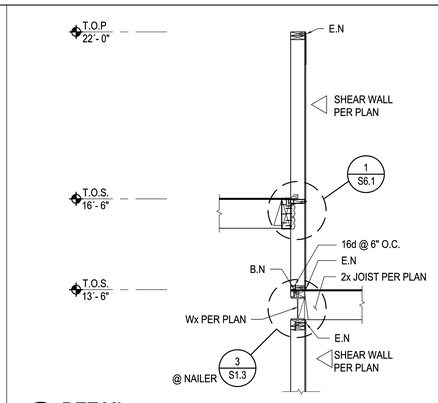

2 DETAIL

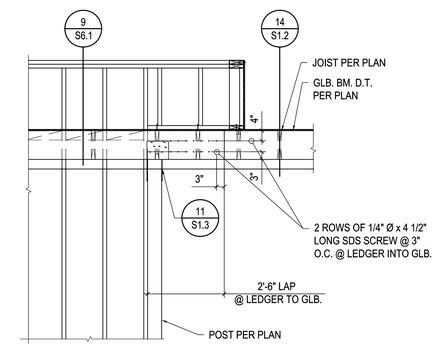

3 DETAIL

4 DETAIL

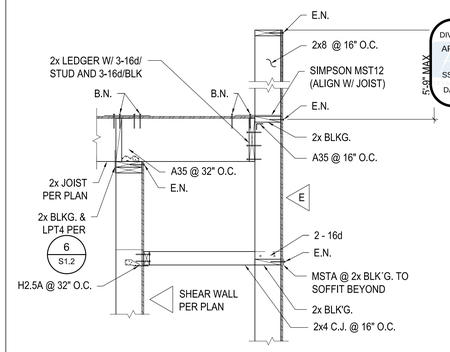

5 DETAIL

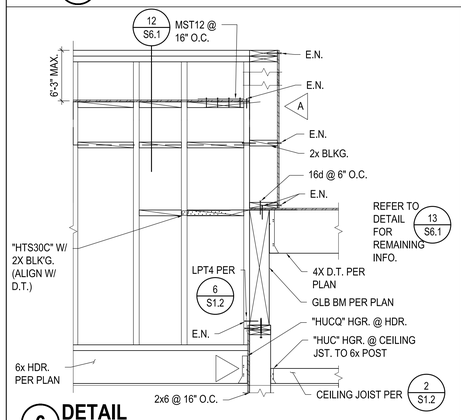

6 DETAIL

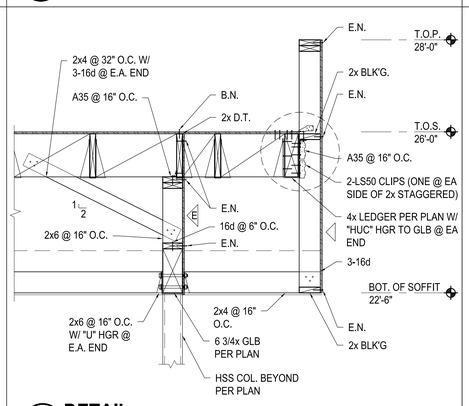

7 DETAIL

8 DETAIL

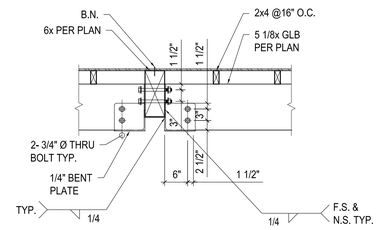

9 DETAIL

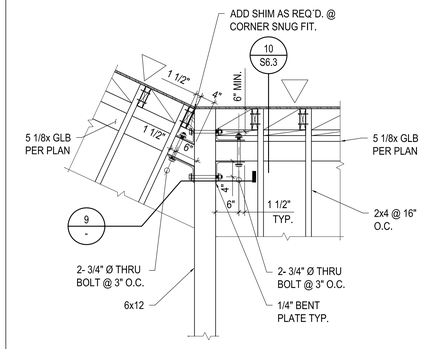

10 PLAN VIEW

11 DETAIL

12 DETAIL

13 DETAIL

14 DETAIL

15 DETAIL

17 DETAIL

18 SECTION

19 DETAIL

20 DETAIL

IDENTIFICATION STAMP
DIV. OF THE STATE ARCHITECT
APP. 04-118693 INC:
REVIEWED FOR
SS ☑ FLS ☑ ACS ☑
DATE: 03.13.2020

Date: JAN 23, 2020

Revison | Date

WSI
WELSH STRUCTURES, INC.
12722 BARRET CT. LANE
EL CAJON, CA. 92020
PH: 714-352-6297
JN: 19-034
Consultant

ENGINEER ★ KIMBERLY S. WELSH ★ No. 29981 Exp. 6-30-20 ★ CIVIL ★ STATE OF CALIFORNIA
Engineer

studiowc
ARCHITECTURE + ENGINEERING
515 Encinitas Blvd. Ste. 201, Encinitas, California 92024
Telephone: (760)753-6800 Fax: (760)452-7541

LICENSED ARCHITECT ★ ROBERT D. WEBB R.A. ★ C-28036 ★ OCTOBER 31, 2021 ★ STATE OF CALIFORNIA

CHET F. HARRITT ELEM. SCHOOL
LRC & CLASSROOM ADDITION
SANTEE SCHOOL DISTRICT

FRAMING DETAILS

Job: IUSD-MPES-02

S6.4

MECHANICAL GENERAL NOTES

1. REVIEW THESE PLANS AND SPECIFICATIONS INCLUDING PLANS AND SPECIFICATIONS OF OTHER TRADES PRIOR TO BID. ANY ITEMS REQUIRING CLARIFICATION SHALL BE BROUGHT TO THE ATTENTION OF ARCHITECT OF RECORD IN SUFFICIENT TIME TO BE INCORPORATED INTO THE BID.
2. VERIFY & COORDINATE EXACT LOCATION EQUIPMENT. PENETRATIONS THROUGH ROOF, FLOOR AND WALLS WITH ARCHITECTURAL, STRUCTURAL, PLUMBING AND ELECTRICAL PRIOR TO SHOP DRAWINGS AND CONSTRUCTION.
3. COORDINATE EXACT SIZE AND ROUTING OF DUCT WORK AND PIPING WITH ARCHITECTURAL STRUCTURAL, PLUMBING AND ELECTRICAL PRIOR TO SHOP DRAWING AND CONSTRUCTION.
4. PROVIDE A COMPLETE SET OF SHOP DRAWINGS AND DETAILS BASED ON ACTUAL FIELD MEASUREMENT AND EQUIPMENT PROCURED. REFER TO SPECIFICATIONS, AND REQUIREMENTS FOR SHOP DRAWINGS ON M0.1.
5. PROVIDE ACCESS AND CLEARANCES FOR EQUIPMENT MAINTENANCE AS RECOMMENDED BY APPLICABLE CODES AND EQUIPMENT MANUFACTURER. COORDINATE WITH OTHER TRADES.
6. CONTRACTOR SHALL BE RESPONSIBLE FOR PROTECTION AND REPAIR OF ADJACENT EXISTING SURFACES, EQUIPMENT, AREAS AND PROPERTY THAT MAY BE DAMAGED AS A RESULT OF DEMOLITION AND/OR NEW WORK.
7. FOR CONDITIONS THAT PIPE AND CONDUIT SUPPORT IS NOT PROVIDED, REFER TO SMACNA DETAILS.
8. THE CONTRACTOR SHALL FURNISH ALL MATERIALS, LABOR, EQUIPMENT, TRANSPORTATION AND SERVICES NECESSARY FOR COMPLETION OF THE WORK.
9. ALL WORK SHALL COMPLY WITH THE LATEST EDITION, ALL APPLICABLE CODES, SPECIFICATIONS, REQUIREMENTS OF AGENCIES HAVING JURISDICTION AND INDUSTRY STANDARDS.
10. INSULATE PIPING AND DUCT WORK IN ACCORDANCE WITH THE GOVERNING CODES. INSULATION SHALL COMPLY WITH STATE FIRE MARSHALL CRITERIA AND SHALL NOT EXCEED FLAME SPREAD OF 25 AND SMOKE DEVELOPED RATING OF NOT MORE THAN 50 WHEN TESTED AS A COMPOSITE INSULATION INCLUDING INSULATION, FACING MATERIALS, TAPES AND ADHESIVES AS NORMALLY APPLIED.
11. START-UP AND COMMISSION THE MECHANICAL SYSTEMS IN ACCORDANCE TO CALIFORNIA ENERGY CODE, ASHRAE AND NEBB STANDARDS.
12. THESE DRAWINGS ARE ESSENTIALLY DIAGRAMMATIC AND ARE NOT INTENDED TO INDICATE ALL DETAILS AND NECESSARY OFFSETS OF PIPING OR DUCT WORK. THE CONTRACTOR SHALL INSTALL MATERIAL AND EQUIPMENT IN A MANNER TO AVOID OBSTRUCTIONS, PRESERVE HEADROOM, AND KEEP OPENINGS AND PASSAGEWAYS CLEAR. ALL INSTALLATIONS SHALL COMPLY WITH NORMALLY ACCEPTABLE INDUSTRY STANDARDS. THE CONTRACTOR SHALL NOTIFY THE ARCHITECT IN WRITING OF ANY DISCREPANCIES OR CONFLICTS THAT WOULD AFFECT THE SYSTEM PERFORMANCE OR INCUR ADDITIONAL COSTS. THIS NOTIFICATION SHALL BE SUBMITTED PRIOR TO INSTALLATION OF THE ITEMS CONCERNED.
13. SUBSTITUTION IS NOT ALLOWED WITHOUT APPROVAL OF OWNER AND ARCHITECT OF RECORD. SUBSTITUTION OF MECHANICAL EQUIPMENT WITH EFFICIENCIES LOWER THAN THOSE INDICATED ON THE PLANS MAY REQUIRE RECALCULATION OF TITLE 24 DOCUMENTS. IF THE CONTRACTOR CHOOSES TO UTILIZE SUCH EQUIPMENT, HE/SHE ASSUMES FULL RESPONSIBILITY FOR THE RECALCULATION AND JURISDICTIONAL APPROVAL OF TITLE 24 DOCUMENTS. SUBSTITUTION OF EQUIPMENT OR DEVIATION FROM EQUIPMENT BASES OF DESIGN WITH GREATER WEIGHT OR OF DIFFERENT DIMENSIONS AND CONFIGURATION WHICH AFFECTS STRUCTURAL DETAILS OR SUPPORTS MUST BE SUBMITTED TO DSA IN A CCD, PRIOR TO CONSTRUCTING THE WORK OR INSTALLING THE EQUIPMENT. IF THE CONTRACTOR CHOOSES TO DEVIATE FROM BASIS OF DESIGN HE/SHE ASSUMES FULL RESPONSIBILITY FOR THE DSA RE-SUBMITTAL. DESIGN CHANGES, RECALCULATION AND REVISION TO MOUNTING DETAIL IS NOT INCLUDED IN OUR SCOPE OF WORK.
14. IF THE CONTRACTOR'S USE OF SUBSTITUTE MATERIALS, EQUIPMENT OR METHODS OF INSTALLATION REQUIRES ANY CHANGES IN OTHER TRADES WORK FROM THAT SHOWN ON THE DRAWINGS, THE EXTRA COST IS THE RESPONSIBILITY OF THE CONTRACTOR INITIATING THE SUBSTITUTION.
15. SUBMITTALS: APPROVAL OF THE SUBMITTALS DOES NOT RELEASE THE CONTRACTOR FROM OBLIGATIONS TO FULLY COMPLY WITH ALL REQUIREMENTS OF THE CONSTRUCTION DOCUMENTS OR APPLICABLE CODE REGULATIONS.
16. ALL WORK UNDER THIS CONTRACT SHALL BE PERFORMED WHILE NORMAL OPERATIONS ARE BEING CONDUCTED IN ADJACENT SPACES. COORDINATE WITH GENERAL CONTRACTOR AND DISTRICT PROJECT MANAGER TO INSURE THAT WORK DOESN'T DISRUPT OPERATIONS IN ANY WAY.
17. INSTALL ALL WORK TO CLEAR NEW AND EXISTING ARCHITECTURAL AND STRUCTURAL MEMBERS AND EXISTING MECHANICAL SYSTEMS. ADJUST PIPING AND DUCTWORK AS REQUIRED TO ACCOMMODATE NEW WORK. NO ITEMS SUCH AS PIPE, DUCT, ETC., TO BE IN CONTACT WITH ANY EQUIPMENT. INSTALL ALL DUCTWORK AND PIPING AS HIGH AS POSSIBLE OR AS SPECIFIED ON DRAWINGS TO MAINTAIN MAXIMUM ACCESSIBILITY.
18. RESTORE ALL DAMAGE RESULTING FROM YOUR WORK, AND LEAVE PREMISES IN CLEAN CONDITION WHEN FINISHED WITH WORK.
19. KEEP ONE SET OF PLANS AT THE JOB SITE TO RECORD ANY CHANGES IN DESIGN.
20. PROVIDE BALANCING AND TESTING REPORT FOR AIR AND REFRIGERATION SYSTEMS TO ACHIEVE AND CONFIRM COMPLIANCE WITH DRAWINGS AND SPECIFICATION. TESTING AND BALANCING SHALL BE PERFORMED BY AN AGENT CERTIFIED BY EITHER AABC OR NEBB. USE STANDARD FORMS FOR AABC'S "NATIONAL STANDARD FOR TESTING, ADJUSTING, AND BALANCING. FOR ENVIRONMENTAL SYSTEMS USE NEBB'S PROCEDURAL STANDARDS. ADJUST, SET AND BALANCE POWER EXHAUST TO INSURE THAT SPACES ARE NOT PRESSURIZED, (ARE SLIGHTLY POSITIVE, 0.05 INCHES WC), WHEN SYSTEMS ARE ON ECONOMIZER MODE. TAB REPORT SHALL INCLUDE WHEN SYSTEMS ARE ON ECONOMIZER MODE AND WHEN NOT ON ECONOMIZER MODE. PROVIDE SPACE PRESSURE SENSORS FOR ALL SYSTEMS.
21. OBTAIN WRITTEN PERMISSION OF ARCHITECT OF RECORD BEFORE PROCEEDING WITH ANY CUTTING OR PATCHING OF STRUCTURAL SYSTEMS. IT SHALL BE REVIEWED BY AND APPROVED BY STRUCTURAL ENGINEER OF RECORD AND DSA.
22. NO MECHANICAL SYSTEM SHALL BE INSTALLED UNTIL ALL REQUIRED MECHANICAL PLAN CHECK PERMITS AND APPROVALS HAVE BEEN OBTAINED FROM ALL REQUIRED AGENCIES.
23. COORDINATE AND SCHEDULE TIMING FOR UTILITY SERVICE CONNECTION.
24. ALL LINES BELOW SLAB ON GRADE TO BE LOCATED AWAY FROM ALL LOAD BEARING FOOTINGS.
25. ANY STRUCTURAL FIREPROOFING DAMAGED DURING INSTALLATION OF MECHANICAL EQUIPMENT, PIPING, ETC. SHALL BE REPAIRED AT NO COST TO THE OWNER. REPAIR SHALL BE DIRECTED BY THE ENGINEER OF RECORD.
26. CONTROLS CONTRACTOR, ELECTRICAL CONTRACTOR, AND MECHANICAL CONTRACTOR SHALL WORK AND COORDINATE TOGETHER TO MAINTAIN REQUIRED CLEARANCES FOR ALL EQUIPMENT AND CONTROL PANELS. IF THERE ARE ANY ISSUES TO PROVIDE REQUIRED CLEARANCE IT SHOULD BE BROUGHT TO THE ATTENTION OF THE ARCHITECT OF RECORD PRIOR TO INSTALLATION.
27. ALL EXPOSED REFRIGERATION PIPING SHALL BE INSULATED INSIDE CPVC CONDUIT AND PROVIDE ALUMINUM COVER OVER CONDUIT. REFER TO MECHANICAL GENERAL NOTE #10 FOR BURNING CHARACTERISTICS.
28. FIRE ALARM SYSTEM SHALL PROVIDE AUTOMATIC SHUTOFF PER CMC SECTION 608 FOR SYSTEMS / SPACES EXCEEDING 2000 CFM, UNLESS THE SPACE HAS DIRECT ACCESS TO OUTSIDE. REFER TO PACKAGE UNITS SCHEDULE REMARK #22 FOR AC-7 AND AC-8.
29. ALL DUCT SIZES NOTED ON DRAWINGS ARE INSIDE DIMENSIONS.
30. ALL SQUARE AND RECTANGULAR DUCTS SHALL BE LINED, EXCEPT EXHAUST DUCTWORK.

MECHANICAL GENERAL NOTES

32. MAXIMUM ALLOWABLE LENGTH OF FLEXIBLE DUCT IS 5'-0" AT THE DIFFUSERS. FLEXIBLE DUCTS SHALL HAVE THE FOLLOWING REQUIREMENTS:
    a. CONSIST OF AN EXTERIOR REINFORCED LAMINATED VAPOR BARRIER, 1-1/2" THICK FIBERGLASS INSULATION, ENCAPSULATED SPRING STEEL WIRE HELIX AND IMPERVIOUS, SMOOTH, NON-PERFORATED INTERIOR VINYL LINER. INDIVIDUAL LENGTHS OF FLEXIBLE DUCTS SHALL CONTAIN FACTORY-FABRICATED STEEL CONNECTION COLLARS.
    b. BE SUPPORTED AT OR NEAR MID LENGTH WITH 2" WIDE 28 GAUGE STEEL HANGER COLLAR ATTACHED TO THE STRUCTURE WITH AN APPROVED DUCT HANGER. INSULATION SHALL MINIMIZE SHARP RADIUS TURNS OR OFFSETS.
    c. THE MAXIMUM LENGTH SHALL BE FIVE (5) FEET AND CAN BE USED AT THE TERMINAL ENDS ONLY.
    d. INSULATION AND FLEXIBLE DUCT SHALL COMPLY WITH STATE FIRE MARSHALL CRITERIA AND SHALL NOT EXCEED FLAME SPREAD OF 25 AND SMOKE DEVELOPED OF 50 PER ASTM-84, NFPA-233 AND UL 723.
33. ALL DUCT INSULATION R VALUE SHALL COMPLY WITH CALIFORNIA ENERGY STANDARDS YEAR 2016, TABLE 150.1-A OR SPECIFICATION WHICHEVER IS MORE STRINGENT.
34. AT THE TIME OF ROUGH INSTALLATION AND DURING STORAGE ON CONSTRUCTION SITE UNTIL FINAL STARTUP OF THE HVAC EQUIPMENT, ALL DUCT AND OTHER RELATED AIR DISTRIBUTION COMPONENT OPENINGS SHALL BE COVERED WITH TAPE, PLASTIC, SHEETMETAL OR OTHER METHODS ACCEPTABLE TO THE ENFORCING AGENCY TO REDUCE THE AMOUNT OF DUST, WATER DEBRIS WHICH MAY ENTER THE SYSTEM.
35. REFRIGERATION PIPING INSULATION R-VALUE SHALL COMPLY WITH 2016 BUILDING ENERGY EFFICIENCY STANDARDS / TITLE 24, TABLE 120.3-A, PRIOR TO INSULATING THE PIPES CONFIRM REFRIGERATION PIPING TEMPERATURE WITH THE MANUFACTURER.

ANCHORAGE NOTES

MEP COMPONENT ANCHORAGE NOTE:
ALL MECHANICAL, PLUMBING AND ELECTRICAL COMPONENTS SHALL BE ANCHORED AND INSTALLED PER THE DETAILS ON THE DSA APPROVED CONSTRUCTION DOCUMENTS. WHERE NO DETAIL IS INDICATED, THE FOLLOWING COMPONENTS SHALL BE ANCHORED OR BRACED TO MEET THE FORCE AND DISPLACEMENT REQUIREMENTS PRESCRIBED IN THE 2016 CBC, SECTIONS 1616A.1.18 THROUGH 1616A.1.26 AND ASCE 7-10 CHAPTER 13, 26 AND 30.

1. ALL PERMANENT EQUIPMENT AND COMPONENTS.
2. TEMPORARY OR MOVABLE EQUIPMENT THAT IS PERMANENTLY ATTACHED (E.G. HARD WIRED) TO THE BUILDING UTILITY SERVICES SUCH AS ELECTRICITY, GAS OR WATER.
3. MOVABLE EQUIPMENT WHICH IS STATIONED IN ONE PLACE FOR MORE THAN 8 HOURS AND HEAVIER THAN 400 POUNDS ARE REQUIRED TO BE ANCHORED WITH TEMPORARY ATTACHMENTS.

THE FOLLOWING MECHANICAL AND ELECTRICAL COMPONENTS SHALL BE POSITIVELY ATTACHED TO THE STRUCTURE, BUT NEED NOT BE DETAILED ON THE PLANS. THESE COMPONENTS SHALL HAVE FLEXIBLE CONNECTIONS PROVIDED BETWEEN THE COMPONENT AND ASSOCIATED DUCTWORK, PIPING AND CONDUIT.

A. COMPONENTS WEIGHING LESS THAN 400 POUNDS AND HAVE A CENTER OF MASS LOCATED 4 FEET OR LESS ABOVE THE ADJACENT FLOOR OR ROOF LEVEL THAT DIRECTLY SUPPORT THE COMPONENT.
B. COMPONENTS WEIGHING LESS THAN 20 POUNDS, OR IN THE CASE OF DISTRIBUTED SYSTEMS, LESS THAN 5 POUNDS PER FOOT, WHICH ARE SUSPENDED FROM A ROOF OR FLOOR OR HUNG FROM A WALL.

FOR THOSE ELEMENTS THAT DO NOT REQUIRE DETAILS ON THE APPROVED DRAWINGS, THE INSTALLATION SHALL BE SUBJECT TO THE APPROVAL OF THE STRUCTURAL ENGINEER OF RECORD AND THE DSA DISTRICT STRUCTURAL ENGINEER. THE PROJECT INSPECTOR WILL VERIFY THAT ALL COMPONENTS AND EQUIPMENT HAVE BEEN ANCHORED IN ACCORDANCE WITH ABOVE REQUIREMENTS.

PIPING, DUCTWORK AND ELECTRICAL DISTRIBUTION SYSTEM BRACING NOTE:
PIPING, DUCTWORK AND ELECTRICAL DISTRIBUTION SYSTEMS SHALL BE BRACED TO COMPLY WITH THE FORCES AND DISPLACEMENTS PRESCRIBED IN ASCE 7-10 SECTION 13.3 AS DEFINED IN ASCE 7-10 SECTION 13.6.5.6, 13.6.7, 13.6.8, AND 2016 CBC, SECTIONS 1616A.1.24, 1616A.1.25 AND 1616A.1.26.

THE METHOD OF SHOWING BRACING AND ATTACHMENTS TO THE STRUCTURE FOR THE IDENTIFIED DISTRIBUTION SYSTEM ARE AS NOTED BELOW. WHEN BRACING AND ATTACHMENTS ARE BASED ON A PREAPPROVED INSTALLATION GUIDE (E.G. SMACNA OR OSHPD OPM), COPIES OF THE BRACING SYSTEM INSTALLATION GUIDE OR MANUAL SHALL BE AVAILABLE ON THE JOBSITE PRIOR TO THE START OF AND DURING THE HANGING AND BRACING OF THE DISTRIBUTION SYSTEMS. THE STRUCTURAL ENGINEER OF RECORD SHALL VERIFY THE ADEQUACY OF THE STRUCTURE TO SUPPORT THE HANGER AND BRACE LOADS.

MECHANICAL PIPING (MP), MECHANICAL DUCTS (MD), PLUMBING PIPING (PP), ELECTRICAL DISTRIBUTION SYSTEMS (E):

MP	MD	PP	E	
☐	☐	☐	☐	- OPTION 1: DETAILED ON THE APPROVED DRAWINGS WITH PROJECT SPECIFIC NOTES AND DETAILS.
☐	☐	☐	☐	- OPTION 2: SHALL COMPLY WITH THE APPLICABLE OSHPD PRE-APPROVED OPM#.
☒	☒	☐	☐	- OPTION 3: SHALL COMPLY WITH SMACNA SEISMIC RESTRAINT MANUAL, OSHPD EDITION (2009), INCLUDE ANY ADDENDA, FASTENERS AND OTHER AMENDMENTS NOT SPECIFICALLY IDENTIFIED IN THE SMACNA SEISMIC RESTRAINT MANUAL, OSHPD EDITION ARE DETAILED ON THE APPROVED DRAWINGS WITH PROJECT SPECIFIC NOTES AND DETAILS. THE DETAILS SHALL ACCOUNT FOR THE APPLICABLE SEISMIC HAZARD LEVEL "C" AND CONNECTION LEVEL "1" FOR THE PROJECT AND CONDITIONS.

HVAC ABBREVIATIONS & SYMBOLS

SYMBOLS	ABBREV.	DESCRIPTION
	(L)	LINE DUCTWORK (PLENUM)
UP		DUCT RISE IN DIRECTION OF FLOW
DN		DUCT DROP IN DIRECTION OF FLOW
		DUCT TRANSITION
		DUCT TRANSITION FROM SQUARE TO ROUND
		ROUND DUCT UP
		ROUND DUCT DOWN
	SA/OSA	SUPPLY AIR/OUTSIDE AIR DUCT UP
	SA/OSA	SUPPLY AIR/OUTSIDE AIR DUCT DOWN
	RA	RETURN AIR DUCT UP
	RA	RETURN AIR DUCT DOWN
	EA	EXHAUST AIR DUCT UP
	EA	EXHAUST AIR DUCT DOWN
	CD	CEILING DIFFUSER
	CR	CEILING RETURN
	CE/EF	CEILING EXHAUST GRILLE/ EXHAUST FAN
18x10		DUCT WORK (1ST NUMBER INDICATES WIDTH SHOWN), NET INSIDE DIMENSION
	(L)	LINED DUCT
	TV	SQUARE ELBOW WITH TURNING VANES
		RADIUS ELBOW
	FLEX	FLEXIBLE CONNECTION
	FLEX	FLEXIBLE DUCT CONNECTION
	MVD	MANUAL VOLUME DAMPER
	BDD	BACK DRAFT DAMPER
		SYMBOL, SEE EQUIPMENT SCHEDULE
	DN	DOWN OR DROP
	UP	RISE OR RISER
T	T	THERMOSTAT / TEMPERATURE SENSOR
CO2	CO2	CARBON DIOXIDE SENSOR
		OCCUPANCY / MOTION SENSOR

REQUIREMENTS FOR SHOP DRAWINGS

PRIOR TO CONSTRUCTION PROVIDE ORIGINALLY PREPARED CONTRACTOR'S SHOP DRAWINGS IN ELECTRONIC FORMAT. IN ADDITION TO THE REQUIREMENTS SPECIFIED IN SPECIFICATIONS, THE SHOP DRAWINGS SHALL INCLUDE THE FOLLOWING, AND NOT LIMITED TO:

1. DUCT, PIPE AND PLUMBING ELEVATIONS.
2. DOUBLE LINE DUCTWORK AND PIPING (6" AND LARGER).
3. ACTUAL SIZE OF PURCHASED EQUIPMENT, PER APPROVED CONTRACTOR'S SUBMITTALS.
4. ACCESS PANELS, INCLUDING CEILING PANELS.
5. ACCESS CLEARANCES FOR EQUIPMENT.
6. ACTUAL LOCATIONS OF CEILING DIFFUSERS, REGISTERS AND RETURN REGISTERS.
7. LOCATIONS OF STRUCTURAL MEMBERS SUCH AS BEAMS AND PLUMBING SYSTEMS.
8. ACTUAL LOCATIONS OF CONTROL PANELS AND POWER CONNECTIONS TO EQUIPMENT.
9. COLOR CODED DUCT AND PIPING BASED ON MATERIAL USED.
10. MINIMUM 1/4" = 1'-0" SCALE DRAWINGS.
11. LABEL AND TAG SCHEDULE FOR EQUIPMENT
12. DUCT TRANSITIONS TO CLEAR BEAMS OR TIGHT AREAS.
13. ROOM TEMPERATURE SENSOR LOCATIONS, COORDINATED WITH ARCHITECT OF RECORD.
14. POINT OF CONNECTION TO UTILITIES OUTSIDE THE BUILDING, COORDINATED WITH CIVIL.
15. SECTIONS OR 3-D DRAWINGS OF CONGESTED AREAS.
16. GRID LINES.
17. UTILITY PROFILES FOR UNDERGROUND PIPING, COORDINATED WITH CIVIL AND PLUMBING.
18. DO NOT COMMENCE WITH ANY INSTALLATION, DEMOLITION OR ORDERING OF ANY EQUIPMENT OR MATERIAL FABRICATION WITHOUT AN APPROVED SHOP DRAWING SUBMITTAL.

HVAC ABBREVIATIONS

ABBREV.	DESCRIPTION
AC	AIR CONDITIONING
AD/AP	ACCESS DOOR/ACCESS PANEL
AFF	ABOVE FINISHED FLOOR
AFG	ABOVE FINISHED GRADE
APD	AIR PRESSURE DROP,INCH WATER COLUMN
BD	BYPASS DAMPER
BDD	BACKED DRAFT DAMPER
BF	BELOW FLOOR
BFP	BACK FLOW PREVENTER
BHP	BRAKE HORSE POWER
BTUH	BRITISH THERMAL UNIT(PER HOUR)
CD	CEILING DIFFUSER/CONDENSATE DRAIN
CFM	CUBIC FEET PER MINUTE
CLG	CEILING
COND	CONDENSER
CONT	CONTINUATION
CR	CEILING RETURN
CU	CONDENSING UNIT
DB	DRY BULB (°F)
DIA	DIAMETER
DL	DOOR LOUVER
DN	DOWN
DWGS	DRAWINGS
(E)	EXISTING
EA	EXHAUST AIR
EAT	ENTERING AIR TEMPERATURE
EDB	ENTERING DRY BULB
EF	EXHAUST FAN
EFF	EFFICIENCY
ESP	EXTERNAL STATIC PRESSURE
EWB	ENTERING WET BULB
EWT	ENTERING WATER TEMPERATURE
FC	FAN COIL
FF	FINISHED FLOOR
FLA	FULL LOAD AMPERES
FPM	FEET PER MINUTE
GA	GAUGE
GALV	GALVANIZED
GI	GALVANIZED IRON
GPH	GALLONS PER HOUR
GPM	GALLONS PER MINUTE
GV	GRAVITY VENTILATOR
HP	HORSE POWER
HTG	HEATING
HW	HOT WATER
IN	INCH
KWH	KILOWATT HOUR
KW	KILOWATTS
LBS	POUNDS
LBS/HR	POUNDS PER HOUR
LDB	LEAVING DRY BULB TEMPERATURE (°F)
LRA	LOCKED ROTOR AMPERES
LWB	LEAVING WET BULB TEMPERATURE (°F)
LWT	LEAVING WATER TEMPERATURE
MVD	MANUAL VOLUME DAMPER
MAX	MAXIMUM
MBH	THOUSAND BRITISH THERMAL UNITS PER HOUR
MIN	MINIMUM
OSA	OUTSIDE AIR
OBD	OPPOSED BLADE DAMPER
RA	RETURN AIR
RLA	RUNNING LOAD AMPERES
RPM	REVOLUTIONS PER MINUTE
RG	RETURN GRILLE
SA	SUPPLY AIR
SD	SUPPLY DIFFUSER
SF	SQUARE FOOT / SQUARE FEET
SOV	SHUT OFF VALVE
SP	STATIC PRESSURE
SPD	STATIC PRESSURE DROP
TCV	TEMPERATURE CONTROL VALVE
TP	TOTAL PRESSURE
TSP	TOTAL STATIC PRESSURE
TYP	TYPICAL
VTR	VENT THRU ROOF
VFD	VARIABLE FREQUENCY DRIVE

SHEET INDEX

M0.1	MECHANICAL LEGEND, SYMBOLS & NOTES
M0.2	MECHANICAL EQUIPMENT SCHEDULES
M0.3	MECHANICAL EQUIPMENT SCHEDULES
M0.4	MECHANICAL TITLE 24
M2.1	MECHANICAL FLOOR PLAN
M4.1	MECHANICAL ROOF PLAN
M4.2	MECHANICAL SECTIONS
M4.3	MECHANICAL ISOMETRIC
M5.1	MECHANICAL DETAILS
M5.2	MECHANICAL DETAILS
M5.3	KILN DETAILS AND SCHEDULE
M6.1	OVERALL CONTROL DIAGRAM
M6.2	PACKAGE UNIT CONTROL DIAGRAM
M6.3	PACKAGE UNIT CONTROL DIAGRAM
M6.4	CONTROL DIAGRAMS
M6.5	CONTROL DIAGRAMS

IDENTIFICATION STAMP
DIV. OF THE STATE ARCHITECT
APP. 04-118693 INC:
REVIEWED FOR
SS ☑ FLS ☑ ACS ☑
DATE: 03.13.2020

Revision | Date

PMPE CONSULTANTS MECHANICAL ENGINEERS
5755 Oberlin Drive, Suite #102
San Diego, CA 92121
Tel: (858) 642-03900
Fax: (858) 642-0902
Consultant

REGISTERED PROFESSIONAL ENGINEER
MAX PAJOHEH
M27488
EXP. 06/30/21
MECHANICAL
STATE OF CALIFORNIA
Engineer

studioWC
ARCHITECTURE + ENGINEERING
515 Encinitas Blvd, Ste. 201, Encinitas, California 92024
Telephone: (760) 634-8800 Fax: (760) 452-7341

LICENSED ARCHITECT
ROBERT D. WEBB
C-28036
OCTOBER 31, 2021
STATE OF CALIFORNIA

CHET F. HARRITT ELEM. SCHOOL
LRC & CLASSROOM ADDITION
SANTEE SCHOOL DISTRICT

MECHANICAL LEGEND, SYMBOLS & NOTES

Drawn: MM
Checked: MP
Date:
Job:

M0.1

PACKAGE GAS HEAT ELECTRIC COOL AIR CONDITIONING UNIT SCHEDULE

SYMBOL	UNIT NO.	MANUFACTURER & MODEL NO.	LOCATION	AREA SERVED	STATIC PRESSURE (IN. WG.)			SA (CFM)	RA (CFM)	MIN. OSA (CFM)	COOLING					GAS HEATING				ELECTRICAL DATA										SEER (IEER)	WEIGHTS (LBS)				DETAILS	REMARKS
					AIR DISTRIBUTION EXTERNAL	50% DIRTY FILTER	TOTAL EXTERNAL				TOTAL (MBH)	SENSIBLE (MBH)	EVAP. EDB (°F)	EVAP. EWB (°F)	EVAP. LDB (°F)	EVAP. LWB (°F)	INPUT (MBH)	OUTPUT (MBH)	EAT (°F)	LAT (°F)	COMPRESSOR QTY.	COMPRESSOR LRA	COMPRESSOR RLA	CONDENSER FAN QTY.	CONDENSER FAN FLA	SUPPLY FAN FLA	SUPPLY FAN BHP	SUPPLY FAN HP	MCA	MOCP	V/PH/Hz		AC UNIT	ECON. / POWER EXHAUST	ROOF CURB	TOTAL		
	AC 1	CARRIER 48LCL005A2A5	ROOF	SPECIAL ED CLASSROOM 1	0.6	0.65	1.25	1520	1520	405	49.09	39.37	80.0	67.0	58.8	57.4	60	49	70.0	98.4	1	83	14	1	3.5	5.8	0.69	-	27	45	208/3/60	16.40	690	90	100	880	7/M5.1	1 2 3 4 5 6 7 8 9 10 11 12 13 14 16 17 18 19 20 21
	AC 2	CARRIER 48LCL005A2A5	ROOF	SCIENCE CLASSROOM 2	0.6	0.65	1.25	1520	1520	405	49.09	39.37	80.0	67.0	58.8	57.4	60	49	70.0	98.4	1	83	14	1	3.5	5.8	0.69	-	27	45	208/3/60	16.40	690	90	100	880	7/M5.1	1 2 3 4 5 6 7 8 9 10 11 12 13 14 16 17 18 19 20 21
	AC 3	CARRIER 48LCL005A2A5	ROOF	SCIENCE CLASSROOM 3	0.6	0.65	1.25	1520	1520	405	49.09	39.37	80.0	67.0	58.8	57.4	60	49	70.0	98.4	1	83	14	1	3.5	5.8	0.69	-	27	45	208/3/60	16.40	690	90	100	880	7/M5.1	1 2 3 4 5 6 7 8 9 10 11 12 13 14 16 17 18 19 20 21
	AC 4	CARRIER 48LCL005A2A5	ROOF	CLASSROOM 4	0.6	0.65	1.25	1520	1520	405	49.09	39.37	80.0	67.0	58.8	57.4	60	49	70.0	98.4	1	83	14	1	3.5	5.8	0.69	-	27	45	208/3/60	16.40	690	90	100	880	7/M5.1	1 2 3 4 5 6 7 8 9 10 11 12 13 14 16 17 18 19 20 21
	AC 5	CARRIER 48LCL005A2A5	ROOF	SPECIAL ED CLASSROOM 5	0.6	0.65	1.25	1520	1520	405	49.09	39.37	80.0	67.0	58.8	57.4	60	49	70.0	98.4	1	83	14	1	3.5	5.8	0.69	-	27	45	208/3/60	16.40	690	90	100	880	7/M5.1	1 2 3 4 5 6 7 8 9 10 11 12 13 14 16 17 18 19 20 21
	AC 6	CARRIER 48LCL005A2A5	ROOF	CLASSROOM 6	0.6	0.65	1.25	1520	1520	405	49.09	39.37	80.0	67.0	58.8	57.4	60	49	70.0	98.4	1	83	14	1	3.5	5.8	0.69	-	27	45	208/3/60	16.40	690	90	100	880	7/M5.1	1 2 3 4 5 6 7 8 9 10 11 12 13 14 16 17 18 19 20 21
	AC 7	CARRIER 48LCL004A2A5	ROOF	LIBRARY 8	0.6	0.65	1.25	1150	1150	300	37.05	27.95	80.0	67.0	57.8	57.3	60	49	70.0	107.8	1	73	11.6	1	3.5	5.8	0.42	-	24	30	208/3/60	16.20	600	90	100	790	7/M5.1	1 2 3 4 5 6 7 8 9 10 11 12 13 14 16 17 18 19 20 21 22
	AC 8	CARRIER 48LCL004A2A5	ROOF	LIBRARY 8	0.6	0.65	1.25	1150	1150	300	37.05	27.95	80.0	67.0	58.4	57.3	60	49	70.0	107.8	1	73	11.6	1	3.5	5.8	0.42	-	24	30	208/3/60	15.50	600	90	100	790	7/M5.1	1 2 3 4 5 6 7 8 9 10 11 12 13 14 16 17 18 19 20 21 22
	AC 9	CARRIER 48LCL005A2A5	ROOF	OT/PT CLASSROOM 7	0.6	0.65	1.25	1520	1520	405	49.09	39.37	80.0	67.0	58.8	57.4	60	49	70.0	98.4	1	83	14	1	3.5	5.8	0.69	-	27	45	208/3/60	16.40	690	90	100	880	7/M5.1	1 2 3 4 5 6 7 8 9 10 11 12 13 14 16 17 18 19 20 21
	AC 10	CARRIER 48LCL004A2A5	ROOF	THERAPY 11, 12	0.6	0.65	1.25	1150	1150	300	37.05	27.95	80.0	67.0	58.4	57.3	60	49	70.0	107.8	1	73	11.6	1	3.5	5.8	0.42	-	24	30	208/3/60	15.50	600	90	100	790	7/M5.1	1 2 3 4 5 6 7 8 9 10 11 12 13 14 16 17 18 19 20 21

1. REFRIGERANT SHALL BE R-410.
2. EQUIPPED WITH MERV 13 FILTERS. PRESSURE DROP OF 50% DIRTY FILTERS SHALL BE INCLUDED IN TOTAL EXTERNAL PRESSURE DROP. MERV RATING SHALL BE CLEARLY MARKED ON FILTER FROM FACTORY.
3. AT COMPLETION OF CONSTRUCTION AND AFTER TESTING AND COMMISSIONING THE SYSTEM, REPLACE ALL FILTERS WITH NEW.
4. PROVIDE WITH FACTORY COIL GUARDS.
5. LUVATA ELECTRO-FIN COAT (OR EQUAL) ON CONDENSING COILS.
6. PROVIDE WITH OPEN CONTROLLER, PROVIDED AND INSTALLED BY CONTROLLER CONTRACTOR.
7. IF CONTROLS ARE SAME MANUFACTURER AS AC UNITS, PROVIDE FACTORY / MANUFACTURER CONTROLLER.
8. FOR ECONOMIZER OPERATION AND SET POINT REFER TO CONTROL DIAGRAMS SEQUENCE OF OPERATION.
9. PROVIDE FACTORY INSTALLED VFD ON SUPPLY FAN. VFD SHALL BE "ABB".
10. EVAPORATOR FAN MOTORS SHALL BE BELT DRIVE.
11. PROVIDE WITH TWO STAGE COOLING AND ONE STAGE HEATING.
12. PROVIDE DRY BULB LOW LEAK ECONOMIZER AND HOODS WITH ECONOMIZER FAULT DETECTION AND DIAGNOSTIC. PROVIDE DAMPER ACTUATORS.
13. PROVIDE "MICROMETL" MODULATING POWER EXHAUST ECONOMIZER INCLUDING VFD. DURING TEST AND BALANCE SET AIR FLOW EQUAL TO AC UNIT SUPPLY AIR WHEN SYSTEM IS ON ECONOMIZER MODE. PROVIDE SEPARATE POWER TO POWER EXHAUST.
14. PROVIDE 208 VOLT, 3 PHASE, 60 HERTZ POWER TO 0.5 HP FAN MOTOR, 3.1 FLA, 3.9 MCA AND 7.0 MOCP POWER EXHAUST.
15. PROVIDE 208 VOLT, 3 PHASE, 60 HERTZ POWER TO 1.0 HP FAN MOTOR, 5.8 FLA, 7.3 MCA AND 13.1 MOCP POWER EXHAUST.
16. PROVIDE WITH LOW NOX GAS HEAT, FLUE DISCHARGE DEFLECTOR AND LOW AMBIENT CONTROLS. FLUE DEFLECTOR SHALL RISE UP ABOVE AC UNIT.
17. PROVIDE WITH 11" TALL "MICROMETL" OR EQUAL STANDARD ROOF CURB.
18. COORDINATE EXACT LOCATION OF AC UNITS AND DUCTS THROUGH ROOF WITH STRUCTURAL.
19. COMPLETELY SEAL AROUND ALL DUCT PENETRATIONS THROUGH THE ROOF.
20. PROVIDE EQUIPMENT ID TAG IN COMPLIANCE WITH SCHEDULE OR AS DIRECTED BY OWNER. CONFIRM NUMBERING SYSTEM WITH OWNER.
21. SUBMITTALS SHALL CLEARLY TAG AND IDENTIFY ALL ITEMS OF REMARKS.
22. OCCUPANTS OF SPACE SERVED BY AC UNIT HAVE DIRECT ACCESS TO OUTSIDE IN COMPLIANCE WITH CMC 2016, SECTION 608.0 EXCEPTION 2. SYSTEM SHUT-OFF NOT REQUIRED.

HOOD SCHEDULE

SYMBOL	REMARKS	
H 1	KILN HOOD, REFER TO M5.3.	FOR MOUNTING DETAIL SEE 1/S1.4

EXHAUST FAN SCHEDULE

MARK	UNIT NO.	MANUFACTURER & MODEL NO.	LOCATION	AREA SERVED	FAN TYPE	DRIVE	AIR FLOW CFM	AIR FLOW ESP	FAN RPM	SOUND RATING (SONES)	ELECTRICAL HP / (WATTS)	ELECTRICAL V / PH / HZ	WEIGHT (LBS)	DETAIL	REMARKS
	EF 1	LOREN COOK / 80C3B	ROOF	GIRLS,BOYS ALL GNDR 14, 15, 16	ROOF CENTRIFUGAL	BELT	610	0.40	1666	10.9	1/4	115 / 1 / 60	75	9/M5.2	1 2 4 5 6 8
	EF 2	SEE M5.3	ROOF	STORAGE 18	-	-	--	- -	-	-	--	-	--	2/M5.3 12/M5.2	1 4 6 10 11
	EF 3	LOREN COOK / 60C2B	ROOF	ALL GENDER 10	ROOF CENTRIFUGAL	BELT	110	0.25	1145	5.1	1/4	115 / 1 / 60	70	9/M5.2	1 2 3 4 5 6
	EF 4	LOREN COOK / GC-166	CEILING	ELECTRICAL 21	CEILING	DIRECT	110	0.25	1100	3.0	(46)	115 / 1 / 60	20	8/M5.2	1 4 6 7 9

1. PROVIDE BACKDRAFT DAMPER.
2. PROVIDE PRE-MANUFACTURED ROOF CURB.
3. INTERLOCK WITH LIGHT SWITCH. REFER TO ELECTRICAL PLANS.
4. PROVIDE WITH DISCONNECT SWITCH BY ELECTRICAL.
5. PROVIDE ALUMINUM BIRD SCREEN.
6. PROVIDE EQUIPMENT IDENTIFICATION TAG IN COMPLIANCE WITH SPECIFICATIONS.
7. PROVIDE PRE-MANUFACTURED / GRAVITY VENTILATOR.
8. INTERLOCK WITH THREE (3) OCCUPANCY SENSORS PROVIDED BY ELECTRICAL.
9. PROVIDE WITH LINE VOLTAGE THERMOSTAT.
10. INTERLOCK WITH KILNS AND PROVIDE MANUAL OVERRIDE.
11. PROVIDE VENTED ROOF CURB.

GRAVITY VENTILATOR SCHEDULE

MARK	UNIT NO.	MANUFACTURER & MODEL NO.	LOCATION	AREA SERVED	TYPE	AIR FLOW CFM	AIR FLOW ESP	WEIGHT (LBS)	DETAIL	REMARKS
	GV 1	LOREN COOK / PR-8	ROOF	WORKROOM 17	INTAKE	50	0.05	35	10/M5.2	1 2
	GV 2	LOREN COOK / PR-8	ROOF	COLABORATION 19	INTAKE	50	0.05	35	10/M5.2	1 2
	GV 3	LOREN COOK / PR-8	ROOF	ELECTRICAL 21	RELIEF	110	0.05	35	10/M5.2	1 2

1. PROVIDE PRE-MANUFACTURED ROOF CURB.
2. PROVIDE ALUMINUM BIRD SCREEN.

IDENTIFICATION STAMP
DIV. OF THE STATE ARCHITECT
APP. 04-118693 INC:
REVIEWED FOR
SS ☑ FLS ☑ ACS ☑
DATE: 03.13.2020

Revision / Date

PMPE CONSULTANTS MECHANICAL ENGINEERS
5755 Oberlin Drive, Suite #102
San Diego, CA 92121
Tel: (858) 642-09800
Fax: (858) 642-0802
Consultant

REGISTERED PROFESSIONAL ENGINEER
MAX PAJOOHESH
M27488
EXP. 06/30/21
MECHANICAL
STATE OF CALIFORNIA
Engineer

studioWC
ARCHITECTURE + ENGINEERING
515 Encinitas Blvd, Ste 201, Encinitas, California 92024
Telephone: (760) 634-8880 Fax: (760) 452-7341

LICENSED ARCHITECT
ROBERT D. WEBB JR.
C-28036
OCTOBER 31, 2021
STATE OF CALIFORNIA

CHET F. HARRITT ELEM. SCHOOL
LRC & CLASSROOM ADDITION
SANTEE SCHOOL DISTRICT

MECHANICAL EQUIPMENT SCHEDULES

Drawn: MM
Checked: MP
Date:
Job:

M0.2

DUCTLESS SPLIT SYSTEM SCHEDULE (INDOOR UNIT / COOLING ONLY)

SYMBOL	UNIT NO.	MANUFACTURER & MODEL NO.	TYPE	LOCATION	AREA SERVED	OUTDOOR UNIT	AIRFLOW (CFM)	COOLING		ELECTRICAL DATA			WEIGHTS (LBS)	DETAILS	REMARKS
								TOTAL (MBH)	SENSIBLE (MBH)	MCA/(FLA)	MOCP	V/PH/Hz			
	FC 3	LIEBERT DME020E-PCN	DUCTLESS WALL MOUNT	ELECTRICAL 13	ELECTRICAL 13	CU 1	750	17.4	17.2	(1.4)	15	208/1/60	240	1/M5.2	1 2 3 4 5 6

1. PROVIDE AND INSTALL COMPLETE SYSTEM OF REFRIGERATION PIPING BETWEEN FAN COIL AND ASSOCIATED OUTDOOR UNIT. 3/8" LIQUID AND 5/8" SUCTION, CONFIRM WITH THE MANUFACTURER FOR THE DISTANCE BETWEEN FC'S AND CU'S.
2. PROVIDE WITH FACTORY CONDENSATE PUMP, WITH INTEGRAL FLOAT SWITCH, CHECK VALVE, RESEVOIR. MINIMUM 10 FEET HEAD.
3. PROVIDE WITH MICROPROCESSOR CONTROL AND MONITOR.
4. PROVIDE WITH BACNET INTERFACE CARD FOR DISTRICT EMS FOR ALARM SIGNALS AND MONITORING.
5. PROVIDE WITH WALL MOUNT ANCHORAGE KIT.
6. PROVIDE WITH SEPERATE POWER FROM OUTDOOR UNIT.

DUCTLESS SPLIT SYSTEM HEAT PUMP SCHEDULE (INDOOR UNIT)

SYMBOL	UNIT NO.	MANUFACTURER & MODEL NO.	TYPE	LOCATION	AREA SERVED	OUTDOOR UNIT	AIRFLOW (CFM)	COOLING		ELECTRICAL DATA		WEIGHTS (LBS)	DETAILS	REMARKS
								TOTAL (MBH)	SENSIBLE (MBH)	MCA/(FLA)	V/PH/Hz			
	FC 1	CARRIER 40MBCQ18---3	DUCTLESS CEILING MOUNT	WORKROOM 17	WORKROOM 17	HP 1	420	18	12.4	0.2	208/1/60	35	2/M5.2	1 2 3 4 5 6
	FC 2	CARRIER 40MBCQ18---3	DUCTLESS CEILING MOUNT	COLLAB. 19	COLLAB. 19	HP 2	420	18	12.4	0.2	208/1/60	35	2/M5.2	1 2 3 4 5 6

1. PROVIDE AND INSTALL COMPLETE SYSTEM OF REFRIGERATION PIPING BETWEEN FAN COIL AND ASSOCIATED OUTDOOR UNIT. 1/4" LIQUID AND 1/2" SUCTION, CONFIRM WITH THE MANUFACTURER FOR THE DISTANCE BETWEEN FC'S AND HP'S.
2. PROVIDE WITH FACTORY CONDENSATE PUMP, WITH INTEGRAL FLOAT SWITCH, CHECK VALVE, RESEVOIR. MINIMUM 10 FEET HEAD.
3. PROVIDE WITH MICROPROCESSOR CONTROL AND MONITOR.
4. PROVIDE WITH BACNET INTERFACE CARD FOR DISTRICT EMS FOR ALARM SIGNALS AND MONITORING.
5. PROVIDE 24V INTERFACE KIT MODEL # KSAIC031230.
6. POWERED BY OUTDOOR UNIT. CONFIRM WITH MANUFACTURER.

DUCTLESS SPLIT SYSTEM SCHEDULE (OUTDOOR UNIT / COOLING ONLY)

SYMBOL	UNIT NO.	MANUFACTURER & MODEL NO.	LOCATION	AREA SERVED	INDOOR UNIT	COOLING CAPACITY (MBH)	ELECTRICAL DATA			SEER / (SCOP)	WEIGHTS (LBS)	DETAILS	REMARKS
							MCA/(FLA)	MOCP	V/PH/Hz				
	CU 1	LIEBERT PFH020A-PLN	ROOF	ELECTRICAL 13	FC 3	17.4	(12.1)	25	208/1/60	(2.12)	200	4/M5.2	1 2 3 4 5 6 7

1. PROVIDE AND INSTALL COMPLETE SYSTEM OF REFRIGERATION PIPING BETWEEN FAN COIL AND ASSOCIATED OUTDOOR UNIT. PIPE SIZES SHALL COMPLY WITH THE MANUFACTUERE'S RECOMMENDATION FOR THE DISTANCE BETWEEN FC'S AND CU'S. PROVIDE DOCUMENTATION WITH THE SUBMITTAL.
2. EQUIPPED WITH LOW AMBIENT KIT.
3. DISCONNECT SWITCH BY ELECTRICAL.
4. PROVIDE WITH R-407C REFRIGERANT.
5. EQUIPPED WITH SCROLL COMPRESSOR WITH HOT GAS BYPASS.
6. PROVIDE WITH NEOPERENE VIBRATION ISOLATING PAD.
7. EQUIPPED WITH HIGH PRESSURE SWITCH.
8. PROVIDE WITH R-410A REFRIGERANT.

DUCTLESS SPLIT SYSTEM HEAT PUMP SCHEDULE (OUTDOOR UNIT)

SYMBOL	UNIT NO.	MANUFACTURER & MODEL NO.	LOCATION	AREA SERVED	INDOOR UNIT	COOLING CAPACITY / HEATING CAPACITY (MBH)	ELECTRICAL DATA			SEER / (SCOP)	WEIGHTS (LBS)	DETAILS	REMARKS
							MCA/(FLA)	MOCP	V/PH/Hz				
	HP 1	CARRIER 38MAQB18R--3	ROOF	WORKROOM 17	FC 1	16.0/18.0	18	25	208/1/60	20	125	4/M5.2	1 2 3 4 5 6
	HP 2	CARRIER 38MAQB18R--3	ROOF	COLLAB. 19	FC 2	16.0/18.0	18	25	208/1/60	20	125	4/M5.2	1 2 3 4 5 6

1. PROVIDE AND INSTALL COMPLETE SYSTEM OF REFRIGERATION PIPING BETWEEN FAN COIL AND ASSOCIATED OUTDOOR UNIT. PIPE SIZES SHALL COMPLY WITH THE MANUFACTUERE'S RECOMMENDATION FOR THE DISTANCE BETWEEN FC'S AND HP'S. PROVIDE DOCUMENTATION WITH THE SUBMITTAL.
2. EQUIPPED WITH LOW AMBIENT COMPATIBILITY FROM FACTORY.
3. DISCONNECT SWITCH BY ELECTRICAL.
4. PROVIDE WITH NEOPERENE VIBRATION ISOLATING PAD.
5. EQUIPPED WITH FACTORY INSTALLED HIGH PRESSURE SWITCH.
6. PROVIDE WITH R-410A REFRIGERANT.

GRILLE, REGISTER, AND DIFFUSER SCHEDULE

SYMBOL	MANUFACTURER & MODEL NO.	NECK	FRAME STYLE	FRAME SIZE	OBD (YES / NO)	THROW	DESCRIPTION	DETAILS	REMARKS
CD-1	TITUS / MCD	SEE PLANS	T-BAR	24 x 24	YES	SEE PLANS	MODULAR CORE CEILING DIFFUSER WITH SQUARE TO ROUND ADAPTER	3/M5.1	1 2
CD-2	TITUS / MCD	SEE PLANS	SURFACE	SEE PLANS	YES	SEE PLANS	MODULAR CORE CEILING DIFFUSER WITH SQUARE TO ROUND ADAPTER	3/M5.1	1 2
SW-1	TITUS / 300RL	SEE PLANS	SURFACE	SEE PLANS	YES	SEE PLANS	DOUBLE DEFLECTION, INDIVIDUALLY ADJUSTABLE BLADES SUPPLY AIR DIFFUSER	-	1 2
CR-1	TITUS / 50F	SEE PLANS	T-BAR	24 x 24	YES	SEE PLANS	EGG CRATE SQUARE CEILING RETURN GRILLE	3/M5.1	1 2
WR-1	TITUS / 350RL	SEE PLANS	SURFACE	SEE PLANS	NO	SEE PLANS	RETURN AIR GRILLE, BLADES PARALLEL TO LONG DIMENSION	-	1 2
CE-1	TITUS / 50F	SEE PLANS	SURFACE	SEE PLANS	NO	EXHAUST	EGG CRATE SQUARE CEILING EXHAUST GRILLE	3/M5.1	1 2
TG-1	TITUS / 50F	SEE PLANS	T-BAR	24 x 24	NO	SEE PLANS	EGG CRATE SQUARE CEILING TRANSFER GRILLE	3/M5.1	1 2
TG-2	TITUS / 50F	SEE PLANS	SURFACE	SEE PLANS	NO	SEE PLANS	EGG CRATE SQUARE CEILING TRANSFER GRILLE	3/M5.1	1 2

1. COORDINATE WITH ARCHITECT FOR FINISH COLOR. 2. ALTERNATIVE MANUFACTURER:"KRUEGER", "METAL AIR", "PRICE".

IDENTIFICATION STAMP
DIV. OF THE STATE ARCHITECT
APP. 04-118693 INC:
REVIEWED FOR
SS ☑ FLS ☑ ACS ☑
DATE: 03.13.2020

Revision / Date

PMPE CONSULTANTS MECHANICAL ENGINEERS
5755 Oberlin Drive, Suite #102
San Diego, CA 92121
Tel: (858) 642-09800
Fax: (858) 642-0802
Consultant

REGISTERED PROFESSIONAL ENGINEER
MAX PAJOUHESH
M27488
EXP. 06/30/21
MECHANICAL
STATE OF CALIFORNIA
Engineer

studioWC
ARCHITECTURE + ENGINEERING
515 Encinitas Blvd, Ste 201, Encinitas, California 92024
Telephone: (760) 634-8800 Fax: (760) 452-7341

LICENSED ARCHITECT
ROBERT D. WEBB
C-28036
OCTOBER 31, 2021
STATE OF CALIFORNIA

CHET F. HARRITT ELEM. SCHOOL
LRC & CLASSROOM ADDITION
SANTEE SCHOOL DISTRICT

MECHANICAL EQUIPMENT SCHEDULES

Drawn: MM
Checked: MP
Date:
Job:

M0.3

Project Name:	Chet Harritt ES LRC & Classroom Addition	NRCC-PRF-01-E	Page 1 of 20
Project Address:	8120 Arlette St Santee 92071	Calculation Date/Time:	11:20, Wed, Oct 09, 2019
Compliance Scope:	NewEnvelopeAndMechanical	Input File Name:	Chet Harritt ES LRC & Classroom Addition.cibd16x

A. PROJECT GENERAL INFORMATION

1.	Project Location (city)	Santee	8.	Standards Version	Compliance2016
2.	CA Zip Code	92071	9.	Compliance Software (version)	EnergyPro 7.2
3.	Climate Zone	10	10.	Weather File	SAN-DIEGO-GILLESPIE_722907_CZ2010.epw
4.	Total Conditioned Floor Area in Scope	10,396 ft^2	11.	Building Orientation (deg)	(W) 270 deg
5.	Total Unconditioned Floor Area	0 ft^2	12.	Permitted Scope of Work	NewEnvelopeAndMechanical
6.	Total # of Stories (Habitable Above Grade)	1	13	Building Type(s)	Nonresidential
7.	Total # of dwelling units	0	14	Gas Type	NaturalGas

B. COMPLIANCE RESULTS FOR PERFORMANCE COMPONENTS (Annual TDV Energy Use, kBtu/ft^2-yr) § 140.1

BUILDING COMPLIES

1. Energy Component	2. Standard Design (TDV)	3. Proposed Design (TDV)	4. Compliance Margin (TDV)	5. Percent Better than Standard
Space Heating	12.13	8.76	3.37	27.8%
Space Cooling	78.80	58.34	20.46	26.0%
Indoor Fans	23.88	13.59	10.29	43.1%
Heat Rejection	--	--	--	--
Pumps & Misc.	1.17	--	1.17	--
Domestic Hot Water	9.59	9.59	--	0.0%
Indoor Lighting	48.68	58.15	-9.47	-19.5%
COMPLIANCE TOTAL	**174.25**	**148.43**	**25.82**	**14.8%**
Receptacle	73.17	73.17	0.0	0.0%
Process	--	--	--	--
Other Ltg	--	--	--	--
Process Motors	--	--	--	--
TOTAL	**247.42**	**221.60**	**25.8**	**10.4%**

Project Name:	Chet Harritt ES LRC & Classroom Addition	NRCC-PRF-01-E	Page 2 of 20
Project Address:	8120 Arlette St Santee 92071	Calculation Date/Time:	11:20, Wed, Oct 09, 2019
Compliance Scope:	NewEnvelopeAndMechanical	Input File Name:	Chet Harritt ES LRC & Classroom Addition.cibd16x

C. PRIORITY PLAN CHECK/ INSPECTION ITEMS (in order of highest to lowest TDV energy savings)

		Compliance Margin By Energy Component (from Table B column 4)
1st	Space Cooling: Check envelope and mechanical	
2nd	Indoor Fans: Check envelope and mechanical	
3rd	Space Heating: Check envelope and mechanical	
4th	Pumps & Misc.: Check mechanical	
5th	Heat Rejection: Check envelope and mechanical	
6th	Domestic Hot Water: Check mechanical	
7th	Indoor Lighting: Check lighting	

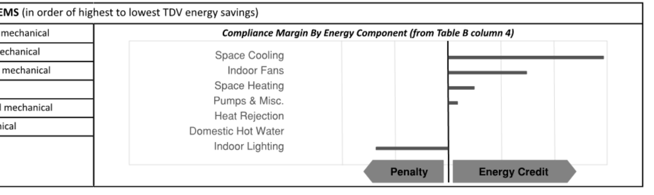

D. EXCEPTIONAL CONDITIONS

This project includes partial performance compliance scope options. The building must show compliance with all other applicable compliance scope options (performance or prescriptively) before occupying.

The building does not include service water heating. Verify that service water heating is not required and is not included in the design.

This project uses the Simplified Geometry Performance Modeling Approach which is not capable of modeling daylighting controls and assumes the prescriptive Secondary Daylit Control requirements are met. PRESCRIPTIVE COMPLIANCE documentation (form NRCC-LTI-02-E) for the requirements of section 140.6(d) Automatic Daylighting Controls in Secondary Daylit Zones is required.

E. HERS VERIFICATION

This Section Does Not Apply

F. ADDITIONAL REMARKS

None Provided

Project Name:	Chet Harritt ES LRC & Classroom Addition	NRCC-PRF-01-E	Page 3 of 20
Project Address:	8120 Arlette St Santee 92071	Calculation Date/Time:	11:20, Wed, Oct 09, 2019
Compliance Scope:	NewEnvelopeAndMechanical	Input File Name:	Chet Harritt ES LRC & Classroom Addition.cibd16x

G. COMPLIANCE PATH & CERTIFICATE OF COMPLIANCE SUMMARY

Identify which building components use the performance or prescriptive path for compliance. "NA"= not in project

For components that utilize the performance path, indicate the sheet number that includes mandatory notes on plans.

Building Component	Compliance Path	Compliance Forms *(required for submittal)*	Location of Mandatory Notes on Plans
Envelope	☒ Performance	NRCC-PRF-ENV-DETAILS (section of the NRCC-PRF-01-E)	
	☐ Prescriptive	NRCC-ENV-01 / 02 / 03 / 04 / 05 / 06-E	
	☐ NA		
Mechanical	☒ Performance	NRCC-PRF-MCH-DETAILS (section of the NRCC-PRF-01-E)	
	☐ Prescriptive	NRCC-MCH-01 / 02 / 03 / 04 / 05 / 06 / 07-E	
	☐ NA		
Domestic Hot Water	☐ Performance	NRCC-PRF-PLB-DETAILS (section of the NRCC-PRF-01-E)	
	☒ Prescriptive	NRCC-PLB-01-E	
	☐ NA		
Lighting (Indoor Conditioned)	☐ Performance	NRCC-PRF-LTI-DETAILS (section of the NRCC-PRF-01-E)	
	☒ Prescriptive	NRCC-LTI-01 / 02 / 03 / 04 / 05-E	
	☐ NA		
Covered Process: Commercial Kitchens	☐ Performance	S2 (section of the NRCC-PRF-01-E)	
	☐ Prescriptive	NRCC-PRC-01/ 03-E	
	☒ NA		
Covered Process: Computer Rooms	☐ Performance	S3 (section of the NRCC-PRF-01-E)	
	☐ Prescriptive	NRCC-PRC-01/ 04-E	
	☒ NA		
Covered Process: Laboratory Exhaust	☐ Performance	S4 (section of the NRCC-PRF-01-E)	
	☐ Prescriptive	NRCC-PRC-01/ 09-E	
	☒ NA		

Project Name:	Chet Harritt ES LRC & Classroom Addition	NRCC-PRF-01-E	Page 4 of 20
Project Address:	8120 Arlette St Santee 92071	Calculation Date/Time:	11:20, Wed, Oct 09, 2019
Compliance Scope:	NewEnvelopeAndMechanical	Input File Name:	Chet Harritt ES LRC & Classroom Addition.cibd16x

G. COMPLIANCE PATH & CERTIFICATE OF COMPLIANCE SUMMARY

The following building components are only eligible for prescriptive compliance. Indicate which are relevant to the project.

Yes	NA	Prescriptive Requirement	Compliance Forms
☐	☒	Lighting (Indoor Unconditioned) §140.6	NRCC-LTI-01 / 02 / 03 / 04 / 05-E
☐	☒	Lighting (Outdoor) §140.7	NRCC-LTO-01 / 02 / 03-E
☐	☒	Lighting (Sign) §140.8	NRCC-LTS-01-E
☐	☒	Solar Thermal Water Heating: §140.5	NRCC-STH-01-E

The following building components may have mandatory requirements per Part 6. Indicate which are relevant to the project.

Yes	NA	Mandatory Requirement	Compliance Forms
		Commissioning: §120.8	
☐	☒	Simple Systems	NRCC-CXR-01 / 02 / 03 / 05-E
☐	☒	Complex Systems	NRCC-CXR-01 / 02 / 04 / 05-E
☐	☒	Electrical: §130.5	NRCC-ELC-01-E
☐	☒	Solar Ready: §110.10	NRCC-SRA-01 / 02-E
☐	☒	Covered Process: §120.6	NRCC-PRC-01-E
☐	☒	Parking Garage	NRCC-PRC-02-E
☐	☒	Commercial Refrigeration	NRCC-PRC-05-E
☐	☒	Warehouse Refrigeration	NRCC-PRC-06/07/08-E
☐	☒	Compressed Air	NRCC-PRC-10-E
☐	☒	Process Boilers	NRCC-PRC-11-E

Project Name:	Chet Harritt ES LRC & Classroom Addition	NRCC-PRF-01-E	Page 5 of 20
Project Address:	8120 Arlette St Santee 92071	Calculation Date/Time:	11:20, Wed, Oct 09, 2019
Compliance Scope:	NewEnvelopeAndMechanical	Input File Name:	Chet Harritt ES LRC & Classroom Addition.cibd16x

H. CERTIFICATE OF INSTALLATION, CERTIFICATE OF ACCEPTANCE & CERTIFICATE OF VERIFICATION SUMMARY (NRCI/NRCA/NRCV) – Documentation Author to indicate which Certificates must be submitted for the features to be recognized for compliance (Retain copies and verify forms are completed and signed to post in field for Field Inspector to verify). See Tables G. and H. in MCH and LTI Details Sections for Acceptance Tests and forms by equipment.

Building Component	Compliance Forms *(required for submittal)*	Confirmed Pass	Confirmed Fail
Envelope	☒ NRCI-ENV-01-E - For all buildings	☐	☐
	☒ NRCA-ENV-02-F- NFRC label verification for fenestration	☐	☐
Mechanical	☒ NRCI-MCH-01-E - For all buildings with Mechanical Systems	☐	☐
	☒ NRCA-MCH-02-A- Outdoor Air	☐	☐
	☒ NRCA-MCH-03-A – Constant Volume Single Zone HVAC	☐	☐
	☐ NRCA-MCH-04-H- Air Distribution Duct Leakage	☐	☐
	☒ NRCA-MCH-05-A- Air Economizer Controls	☐	☐
	☒ NRCA-MCH-06-A- Demand Control Ventilation	☐	☐
	☐ NRCA-MCH-07-A – Supply Fan Variable Flow Controls	☐	☐
	☐ NRCA-MCH-08-A- Valve Leakage Test	☐	☐
	☐ NRCA-MCH-09-A – Supply Water Temp Reset Controls	☐	☐
	☐ NRCA-MCH-10-A- Hydronic System Variable Flow Controls	☐	☐
	☐ NRCA-MCH-11-A – Auto Demand Shed Controls	☐	☐
	☐ NRCA-MCH-12-A- Packaged Direct Expansion Units	☐	☐
	☐ NRCA-MCH-13-A- Air Handling Units and Zone Terminal Units	☐	☐
	☐ NRCA-MCH-14-A- Distributed Energy Storage	☐	☐
	☐ NRCA-MCH-15-A – Thermal Energy Storage	☐	☐
	☐ NRCA-MCH-16-A- Supply Air Temp Reset Controls	☐	☐
	☐ NRCA-MCH-17-A – Condensate Water Temp Reset Controls	☐	☐
	☐ NRCA-MCH-18-A- Energy Management Controls Systems	☐	☐
	☐ NRCV-MCH-04-H- Duct Leakage Test	☐	☐

Project Name:	Chet Harritt ES LRC & Classroom Addition	NRCC-PRF-01-E	Page 6 of 20
Project Address:	8120 Arlette St Santee 92071	Calculation Date/Time:	11:20, Wed, Oct 09, 2019
Compliance Scope:	NewEnvelopeAndMechanical	Input File Name:	Chet Harritt ES LRC & Classroom Addition.cibd16x

H. CERTIFICATE OF INSTALLATION, CERTIFICATE OF ACCEPTANCE & CERTIFICATE OF VERIFICATION SUMMARY (NRCI/NRCA/NRCV) – Documentation Author to indicate which Certificates must be submitted for the features to be recognized for compliance (Retain copies and verify forms are completed and signed to post in field for Field Inspector to verify). See Tables G. and H. in MCH and LTI Details Sections for Acceptance Tests and forms by equipment.

Building Component	Compliance Forms *(required for submittal)*	Confirmed Pass	Confirmed Fail
Plumbing	☐ NRCI-PLB-01-E - For all buildings with Plumbing Systems	☐	☐
	☐ NRCI-PLB-02-E - required on central systems in high-rise residential, hotel/motel application.	☐	☐
	☐ NRCI-PLB-03-E - Single dwelling unit systems in high-rise residential, hotel/motel application.	☐	☐
	☐ NRCI-PLB-21-E - HERS verified central systems in high-rise residential, hotel/motel application.	☐	☐
	☐ NRCI-PLB-22-E - HERS verified single dwelling unit systems in high-rise residential, hotel/motel application.	☐	☐
	☐ NRCV-PLB-21-H- HERS verified central systems in high-rise residential, hotel/motel application.	☐	☐
	☐ NRCV-PLB-22-H - HERS verified single dwelling unit systems in high-rise residential, hotel/motel application.	☐	☐
	☐ NRCI-STH-01-E - Any solar water heating	☐	☐
Indoor Lighting	☐ NRCI-LTI-01-E - For all buildings	☐	☐
	☐ NRCI-LTI-02-E - Lighting control system, or for an Energy Management Control System (EMCS)	☐	☐
	☐ NRCI-LTI-03-E - Line-voltage track lighting integral current limiter, or for a supplementary overcurrent protection panel used to energize only line-voltage track lighting	☐	☐
	☐ NRCI-LTI-04-E - Two interlocked systems serving an auditorium, a convention center, a conference room, or a theater	☐	☐
	☐ NRCI-LTI-05-E - Lighting Control Credit Power Adjustment Factor (PAF)	☐	☐
	☐ NRCI-LTI-06-E - Additional wattage installed in a video conferencing studio	☐	☐
	☐ NRCA-LTI-02-A - Occupancy sensors and automatic time switch controls.	☐	☐
	☒ NRCA-LTI-03-A - Automatic daylighting controls	☐	☐
	☐ NRCA-LTI-04-A - Demand responsive lighting controls	☐	☐
Outdoor Lighting	☐ NRCI-LTO-01-E – Outdoor Lighting	☐	☐
	☐ NRCI-LTO-02-E- EMCS Lighting Control System	☐	☐
	☐ NRCA-LTO-02-A - Outdoor Lighting Control	☐	☐
Sign Lighting	☐ NRCI-LTS-01-E – Sign Lighting	☐	☐
Electrical	☐ NRCI-ELC-01-E - Electrical Power Distribution	☐	☐
Photovoltaic	☐ NRCI-SPV-01-E Photovoltaic Systems	☐	☐

Project Name:	Chet Harritt ES LRC & Classroom Addition	NRCC-PRF-01-E	Page 7 of 20
Project Address:	8120 Arlette St Santee 92071	Calculation Date/Time:	11:20, Wed, Oct 09, 2019
Compliance Scope:	NewEnvelopeAndMechanical	Input File Name:	Chet Harritt ES LRC & Classroom Addition.cibd16x

H. CERTIFICATE OF INSTALLATION, CERTIFICATE OF ACCEPTANCE & CERTIFICATE OF VERIFICATION SUMMARY (NRCI/NRCA/NRCV) – Documentation Author to indicate which Certificates must be submitted for the features to be recognized for compliance (Retain copies and verify forms are completed and signed to post in field for Field Inspector to verify). See Tables G. and H. in MCH and LTI Details Sections for Acceptance Tests and forms by equipment.

Building Component	Compliance Forms *(required for submittal)*	Confirmed Pass	Confirmed Fail
Covered Process	☐ NRCI-PRC-01-E Covered Processes	☐	☐
	☐ NRCA-PRC-01-F- Compressed Air Systems	☐	☐
	☐ NRCA-PRC-02-F- Kitchen Exhaust	☐	☐
	☐ NRCA-PRC-03-F- Garage Exhaust	☐	☐
	☐ NRCA-PRC-04-F- Refrigerated Warehouse- Evaporator Fan Motor Controls	☐	☐
	☐ NRCA-PRC-05-F- Refrigerated Warehouse- Evaporative Condenser Controls	☐	☐
	☐ NRCA-PRC-06-F- Refrigerated Warehouse- Air Cooled Condenser Controls	☐	☐
	☐ NRCA-PRC-07F- Refrigerated Warehouse- Variable Speed Compressor	☐	☐
	☐ NRCA-PRC-08-F- Electrical Resistance Underslab Heating System	☐	☐

I. ENVELOPE GENERAL INFORMATION (See NRCC-PRF-ENV-DETAILS for more information)

						Confirmed
1.	Total Conditioned Floor Area	10,396 ft^2	5.	Number of Floors Above Grade	1	
2.	Total Unconditioned Floor Area	0 ft^2	6.	Number of Floors Below Grade	0	
3.	Addition Conditioned Floor Area	0 ft^2				
4.	Addition Unconditioned Floor Area	0 ft^2				

7. Opaque Surfaces & Orientation	8. Total Gross Surface Area	9. Total Fenestration Area	10. Window to Wall Ratio	Pass	Fail
North Wall	1,618 ft^2	110 ft^2	06.8%	☐	☐
East Wall	9,021 ft^2	1,870 ft^2	20.7%	☐	☐
South Wall	2,021 ft^2	168 ft^2	08.3%	☐	☐
West Wall	0 ft^2	0 ft^2	00.0%	☐	☐
Total	**12,660 ft^2**	**2,148 ft^2**	**17.0%**	☐	☐
Roof	10,396 ft^2	0 ft^2	00.0%	☐	☐

Project Name:	Chet Harritt ES LRC & Classroom Addition	NRCC-PRF-01-E	Page 8 of 20
Project Address:	8120 Arlette St Santee 92071	Calculation Date/Time:	11:20, Wed, Oct 09, 2019
Compliance Scope:	NewEnvelopeAndMechanical	Input File Name:	Chet Harritt ES LRC & Classroom Addition.cibd16x

J. FENESTRATION ASSEMBLY SUMMARY § 110.6

1. Fenestration Assembly Name / Tag or I.D.	2. Fenestration Type / Product Type / Frame Type	3. Certification Method[1]	4. Assembly Method	5. Area ft^2	6. Overall U-factor	7. Overall SHGC	8. Overall VT	9. Status[2]	Pass	Fail
PPG Solarban70XL Clear	VerticalFenestration FixedWindow N/A	NFRC Rated	Manufactured	2148	0.26	0.20	0.34	N	☐	☐

[1] Newly installed fenestration shall have a certified NFRC Label Certificate or use the CEC default tables found in Table 110.6-A and Table 110.6-B. Center of Glass (COG) values are for the glass-only, determined by the manufacturer, and are shown for ease of verification. Site-built fenestration values are calculated per Nonresidential Appendix NA6 and are used in the analysis.
[2] Status: N - New, A – Altered, E – Existing

Taking compliance credit for fenestration shading devices? (if "Yes", see NRCC-PRF-ENV-DETAILS for more information)	No

K. OPAQUE SURFACE ASSEMBLY SUMMARY § 120.7/ § 140.3

1. Surface Name	2. Surface Type	3. Area (ft^2)	4. Framing Type	5. Cavity R-Value	6. Continuous R-Value	7. U-Factor / F-Factor / C-Factor	8. Status[1]	Pass	Fail
Slab On Grade4	UndergroundFloor	10396	NA	0	NA	F-Factor: 0.730	N	☐	☐
R-38 Roof No Attic6	Roof	10396	Wood	38	NA	U-Factor: 0.029	N	☐	☐
R-19 Wall8	ExteriorWall	12660	Wood	19	NA	U-Factor: 0.072	N	☐	☐
R-19 Wall81	InteriorWall	180	Wood	19	NA	U-Factor: 0.069	N	☐	☐

[1] Status: N - New, A – Altered, E – Existing

L. ROOFING PRODUCT SUMMARY § 140.3

1. Product Type	2. Product Density (lb/ft^2)	3. Aged Solar Reflectance	4. Thermal Emittance	5. SRI	6. Cool Roof Credit	7. Roofing Product Description	Pass	Fail
R-38 Roof No Attic6	5.813	0.08	0.75	NA	No	NA	☐	☐

Project Name:	Chet Harritt ES LRC & Classroom Addition	NRCC-PRF-01-E	Page 9 of 20
Project Address:	8120 Arlette St Santee 92071	Calculation Date/Time:	11:20, Wed, Oct 09, 2019
Compliance Scope:	NewEnvelopeAndMechanical	Input File Name:	Chet Harritt ES LRC & Classroom Addition.cibd16x

M. HVAC SYSTEM SUMMARY (see NRCC-PRF-MCH-DETAILS for more information) § 110.1 / § 110.2

Dry System Equipment [1] (Fan & Economizer info included below in Table N)

1. Equip Name	2. Equip Type	3. System Type (Simple [2] or Complex [3])	4. Qty	5. Total Heating Output (kBtu/h)	6. Supp Heat Source (Y/N)	7. Supp Heat Output (kBtuh)	8. Total Cooling Output (kBtu/h)	9. Efficiency Cooling	9. Efficiency Heating	10. Acceptance Testing Required? (Y/N) [4]	11. Status[5]	Pass	Fail
AC 1	SZVAVAC (Packaged3Phase)	Complex	1	49	No	0	47	SEER-16.40 / EER-13.00	AFUE-82.0	Yes	N	☐	☐
AC 2	SZVAVAC (Packaged3Phase)	Complex	1	49	No	0	47	SEER-16.40 / EER-13.00	AFUE-82.0	Yes	N	☐	☐
AC 3	SZVAVAC (Packaged3Phase)	Complex	1	49	No	0	47	SEER-16.40 / EER-13.00	AFUE-82.0	Yes	N	☐	☐
AC 4	SZVAVAC (Packaged3Phase)	Complex	1	49	No	0	47	SEER-16.40 / EER-13.00	AFUE-82.0	Yes	N	☐	☐
AC 5	SZVAVAC (Packaged3Phase)	Complex	1	49	No	0	47	SEER-16.40 / EER-13.00	AFUE-82.0	Yes	N	☐	☐
AC 6	SZVAVAC (Packaged3Phase)	Complex	1	49	No	0	47	SEER-16.40 / EER-13.00	AFUE-82.0	Yes	N	☐	☐
AC 7&8	SZVAVAC (Packaged3Phase)	Complex	2	49	No	0	47	SEER-16.40 / EER-13.00	AFUE-82.0	Yes	N	☐	☐
AC 9	SZVAVAC (Packaged3Phase)	Complex	1	49	No	0	47	SEER-16.40 / EER-13.00	AFUE-82.0	Yes	N	☐	☐
AC 10	SZVAVAC (Packaged3Phase)	Complex	1	49	No	0	36	SEER-15.50 / EER-11.40	AFUE-82.0	Yes	N	☐	☐
FC 1/HP 1	MiniSplitHP (Split3Phase)	Simple	1	19	No	0	17	SEER-14.00 / EER-12.20	HSPF-10.50	Yes	N	☐	☐
FC 2/HP 2	MiniSplitHP (Split3Phase)	Simple	1	19	No	0	17	SEER-14.00 / EER-12.20	HSPF-10.50	Yes	N	☐	☐
FC 3/CU 1	MiniSplitHP (Split3Phase)	Simple	1	0	No	0	17	SEER-14.00 / EER-12.20	HSPF-10.50	Yes	N	☐	☐

[1] Dry System Equipment includes furnaces, air handling units, heat pumps, etc.
[2] Simple Systems must complete NRCC-CXR-03-E commissioning design review form
[3] Complex Systems must complete NRCC-CXR-04-E commissioning design review form
[4] A summary of which acceptance tests are applicable is provided in NRCC-PRF-MCH-DETAILS

Project Name:	Chet Harritt ES LRC & Classroom Addition	NRCC-PRF-01-E	Page 10 of 20
Project Address:	8120 Arlette St Santee 92071	Calculation Date/Time:	11:20, Wed, Oct 09, 2019
Compliance Scope:	NewEnvelopeAndMechanical	Input File Name:	Chet Harritt ES LRC & Classroom Addition.cibd16x

[5] Status: N - New, A – Altered, E – Existing

Wet System Equipment Section Does Not Apply

Discrepancy between modeled and designed equipment sizing? (if "Yes", see Table F. "Additional Remarks" for an explanation)	No

N. ECONOMIZER & FAN SYSTEMS SUMMARY[1] § 140.4

1. Equip Name	2. Outside Air CFM	3. Supply Fan CFM	HP	BHP	TSP (inch WC)	Control	4. Return Fan CFM	HP	BHP	TSP (inch WC)	Control	5. Economizer Type (if present)	Pass	Fail
AC 1	405	1520	0.700	0.700	1.46	VariableSpeedDrive	NA	NA	NA	NA	NA	DifferentialEnthalpy	☐	☐
AC 2	405	1520	0.700	0.700	1.46	VariableSpeedDrive	NA	NA	NA	NA	NA	DifferentialEnthalpy	☐	☐
AC 3	405	1520	0.700	0.700	1.46	VariableSpeedDrive	NA	NA	NA	NA	NA	DifferentialEnthalpy	☐	☐
AC 4	405	1520	0.700	0.700	1.46	VariableSpeedDrive	NA	NA	NA	NA	NA	DifferentialEnthalpy	☐	☐
AC 5	405	1520	0.700	0.700	1.46	VariableSpeedDrive	NA	NA	NA	NA	NA	DifferentialEnthalpy	☐	☐
AC 6	405	1520	0.700	0.700	1.46	VariableSpeedDrive	NA	NA	NA	NA	NA	DifferentialEnthalpy	☐	☐
AC 7&8	300	1520	0.700	0.700	1.46	VariableSpeedDrive	NA	NA	NA	NA	NA	DifferentialEnthalpy	☐	☐
AC 9	405	1520	0.700	0.700	1.46	VariableSpeedDrive	NA	NA	NA	NA	NA	DifferentialEnthalpy	☐	☐
AC 10	300	1150	0.400	0.400	1.10	VariableSpeedDrive	NA	NA	NA	NA	NA	DifferentialEnthalpy	☐	☐
FC 1/HP 1	0	570	0.100	0.100	0.56	ConstantVolume	NA	NA	NA	NA	NA	NA	☐	☐
FC 2/HP 2	0	570	0.100	0.100	0.56	ConstantVolume	NA	NA	NA	NA	NA	NA	☐	☐
FC 3/CU 1	0	570	0.100	0.100	0.56	ConstantVolume	NA	NA	NA	NA	NA	NA	☐	☐

[1] Mechanical ventilation calculations and exhaust fans are included in the NRCC-PRF-MCH-DETAILS section

Project Name:	Chet Harritt ES LRC & Classroom Addition	NRCC-PRF-01-E	Page 11 of 20
Project Address:	8120 Arlette St Santee 92071	Calculation Date/Time:	11:20, Wed, Oct 09, 2019
Compliance Scope:	NewEnvelopeAndMechanical	Input File Name:	Chet Harritt ES LRC & Classroom Addition.cibd16x

O. EQUIPMENT CONTROLS § 120.2

1. Equip Name	2. Equip Type	3. Controls	Pass	Fail
AC 1	SZVAVAC	No DCV Controls Differential Enthalpy Economizer No Supply Air Temp. Control No Optimum Start No Evaporative Cooler No Heat Recovery	☐	☐
AC 2	SZVAVAC	No DCV Controls Differential Enthalpy Economizer No Supply Air Temp. Control No Optimum Start No Evaporative Cooler No Heat Recovery	☐	☐
AC 3	SZVAVAC	No DCV Controls Differential Enthalpy Economizer No Supply Air Temp. Control No Optimum Start No Evaporative Cooler No Heat Recovery	☐	☐
AC 4	SZVAVAC	No DCV Controls Differential Enthalpy Economizer No Supply Air Temp. Control No Optimum Start No Evaporative Cooler No Heat Recovery	☐	☐
AC 5	SZVAVAC	No DCV Controls Differential Enthalpy Economizer No Supply Air Temp. Control No Optimum Start No Evaporative Cooler No Heat Recovery	☐	☐
AC 6	SZVAVAC	No DCV Controls Differential Enthalpy Economizer No Supply Air Temp. Control No Optimum Start No Evaporative Cooler No Heat Recovery	☐	☐

Project Name:	Chet Harritt ES LRC & Classroom Addition	NRCC-PRF-01-E	Page 12 of 20
Project Address:	8120 Arlette St Santee 92071	Calculation Date/Time:	11:20, Wed, Oct 09, 2019
Compliance Scope:	NewEnvelopeAndMechanical	Input File Name:	Chet Harritt ES LRC & Classroom Addition.cibd16x

O. EQUIPMENT CONTROLS § 120.2

1. Equip Name	2. Equip Type	3. Controls	Pass	Fail
AC 7&8	SZVAVAC	1 Zones With CO2Sensor Vent. Control Differential Enthalpy Economizer No Supply Air Temp. Control No Optimum Start No Evaporative Cooler No Heat Recovery	☐	☐
AC 9	SZVAVAC	No DCV Controls Differential Enthalpy Economizer No Supply Air Temp. Control No Optimum Start No Evaporative Cooler No Heat Recovery	☐	☐
AC 10	SZVAVAC	No DCV Controls Differential Enthalpy Economizer No Supply Air Temp. Control No Optimum Start No Evaporative Cooler No Heat Recovery	☐	☐

P. SYSTEM DISTRIBUTION SUMMARY § 120.4/ § 140.4(l)

Dry System Distribution

1. Equip Name	2. Equip Type	3. Duct Leakage and Sealing Required per 140.4(l)	4. Duct Leakage will be verified per NA1 and NA2	5. Ducts Insulation R-Value	5. Ducts Location	6. Status[1]	Pass	Fail
AC 1	SZVAVAC	No	No	8.0	Unconditioned	N	☐	☐
AC 2	SZVAVAC	No	No	8.0	Unconditioned	N	☐	☐
AC 3	SZVAVAC	No	No	8.0	Unconditioned	N	☐	☐
AC 4	SZVAVAC	No	No	8.0	Unconditioned	N	☐	☐
AC 5	SZVAVAC	No	No	8.0	Unconditioned	N	☐	☐
AC 6	SZVAVAC	No	No	8.0	Unconditioned	N	☐	☐
AC 7&8	SZVAVAC	No	No	8.0	Unconditioned	N	☐	☐

Project Name:	Chet Harritt ES LRC & Classroom Addition	NRCC-PRF-01-E	Page 13 of 20
Project Address:	8120 Arlette St Santee 92071	Calculation Date/Time:	11:20, Wed, Oct 09, 2019
Compliance Scope:	NewEnvelopeAndMechanical	Input File Name:	Chet Harritt ES LRC & Classroom Addition.cibd16x

P. SYSTEM DISTRIBUTION SUMMARY § 120.4/ § 140.4(l)

Dry System Distribution

1. Equip Name	2. Equip Type	3. Duct Leakage and Sealing Required per 140.4(l)	4. Duct Leakage will be verified per NA1 and NA2	5. Ducts Insulation R-Value	5. Ducts Location	6. Status[1]	Pass	Fail
AC 9	SZVAVAC	No	No	8.0	Unconditioned	N	☐	☐
AC 10	SZVAVAC	No	No	8.0	Unconditioned	N	☐	☐
FC 1/HP 1	MiniSplitHP	No	No	NA	Ductless	N	☐	☐
FC 2/HP 2	MiniSplitHP	No	No	NA	Ductless	N	☐	☐
FC 3/CU 1	MiniSplitHP	No	No	NA	Ductless	N	☐	☐

[1] Status: N - New, E – Existing

Does the Project Include Zonal Systems? (If "Yes", see NRCC-PRF-MCH-DETAILS for system information)	Yes
Does the Project Include a Solar Hot Water System? (If "Yes", see NRCC-PRF-MCH-DETAILS for system information)	No
Multifamily or Hotel/ Motel Occupancy? (If "Yes", see NRCC-PRF-MCH-DETAILS for DHW system information)	No

Q. INDOOR CONDITIONED LIGHTING GENERAL INFO (see NRCC-PRF-LTI-DETAILS for more info)

This Section Does Not Apply

R. INDOOR CONDITIONED LIGHTING SCHEDULE (Adapted from NRCC-LTI-01-E)[1] § 130.0

This Section Does Not Apply

[1] If lighting power densities were used in the compliance model Building Departments will need to check prescriptive forms for Luminaire Schedule details.

S1. COVERED PROCESS SUMMARY – ENCLOSED PARKING GARAGES § 140.9

This Section Does Not Apply

S2. COVERED PROCESS SUMMARY – COMMERCIAL KITCHENS § 140.9

This Section Does Not Apply

S3. COVERED PROCESS SUMMARY – COMPUTER ROOMS § 140.9

This Section Does Not Apply

Project Name:	Chet Harritt ES LRC & Classroom Addition	NRCC-PRF-01-E	Page 14 of 20
Project Address:	8120 Arlette St Santee 92071	Calculation Date/Time:	11:20, Wed, Oct 09, 2019
Compliance Scope:	NewEnvelopeAndMechanical	Input File Name:	Chet Harritt ES LRC & Classroom Addition.cibd16x

S4. COVERED PROCESS SUMMARY – LABORATORY EXHAUSTS § 140.9

This Section Does Not Apply

T. UNMET LOAD HOURS

This Section Does Not Apply

U. ENERGY USE SUMMARY

Energy Component	Standard Design Site (MWh)	Proposed Design Site (MWh)	Margin (MWh)	Standard Design Site (MBtu)	Proposed Design Site (MBtu)	Margin (MBtu)
Space Heating	0.0	0.1	--	75.8	53.7	22.1
Space Cooling	20.9	14.0	6.9	--	--	--
Indoor Fans	9.2	4.8	4.4	--	--	--
Heat Rejection	--	--	--	--	--	--
Pumps & Misc.	0.7	--	--	--	--	--
Domestic Hot Water	--	--	--	69.2	69.2	0.0
Indoor Lighting	20.9	25.0	-4.1	--	--	--
COMPLIANCE TOTAL	**51.7**	**43.9**	**7.8**	**145.0**	**122.9**	**22.1**
Receptacle	30.7	30.7	0.0	--	--	--
Process	--	--	--	--	--	--
Other Ltg	--	--	--	--	--	--
Process Motors	--	--	--	--	--	--
TOTAL	**82.4**	**74.6**	**7.8**	**145.0**	**122.9**	**22.1**

Project Name:	Chet Harritt ES LRC & Classroom Addition	NRCC-PRF-01-E	Page 15 of 20
Project Address:	8120 Arlette St Santee 92071	Calculation Date/Time:	11:20, Wed, Oct 09, 2019
Compliance Scope:	NewEnvelopeAndMechanical	Input File Name:	Chet Harritt ES LRC & Classroom Addition.cibd16x

DOCUMENTATION AUTHOR'S DECLARATION STATEMENT § 10-103

I certify that this Certificate of Compliance documentation is accurate and complete.

Documentation Author Name: Max Pajouhesh	Signature: [signature]
Company: PMPE Consultants, INC.	
Address: 5755 Oberlin Drive, Suite 102	Signature Date: 10/9/2019
City/State/Zip: San Diego CA 92121	CEA Identification (If applicable): M27488
Phone: (858) 642-0800	

RESPONSIBLE PERSON'S DECLARATION STATEMENT

I certify the following under penalty of perjury, under the laws of the State of California:

1. I hereby affirm that I am eligible under the provisions of Division 3 of the Business and Professions Code to sign this document as the person responsible for its preparation; and that I am licensed in the State of California as a civil engineer, mechanical engineer, electrical engineer, or I am a licensed architect.
2. I affirm that I am eligible under the provisions of Division 3 of the Business and Professions Code by section 5537.2 or 6737.3 to sign this document as the person responsible for its preparation; and that I am a licensed contractor performing this work.
3. I affirm that I am eligible under Division 3 of the Business and Professions Code to sign this document because it pertains to a structure or type of work described as exempt pursuant to Business and Professions Code Sections 5537, 5538 and 6737.1.

Responsible Envelope Designer Name: Robert D. Webb	**Signature:**	
Company: Studio WC		
Address: 515 Encinitas Blvd. Suite 201	Date Signed:	
City/State/Zip: Encinitas CA 92024	Declaration Statement Type:	
Phone: (760) 753-6800	Title:	License #: C28036
Responsible Lighting Designer Name:	**Signature: NOT IN SCOPE**	
Company:		
Address:	Date Signed:	
City/State/Zip:	Declaration Statement Type:	
Phone:	Title:	License #:
Responsible Mechanical Designer Name: Max Pajouhesh	**Signature:** [signature]	
Company: PMPE Consultants		
Address: 5755 Oberlin Drive, Suite 102	Date Signed: 10/9/2019	
City/State/Zip: San Diego CA 92121	Declaration Statement Type:	
Phone: (858) 642-0800	Title: Principal	License #: M27488

Project Name:	Chet Harritt ES LRC & Classroom Addition	NRCC-PRF-01-E	Page 16 of 20
Project Address:	8120 Arlette St Santee 92071	Calculation Date/Time:	11:20, Wed, Oct 09, 2019
Compliance Scope:	NewEnvelopeAndMechanical	Input File Name:	Chet Harritt ES LRC & Classroom Addition.cibd16x

NRCC-PRF-ENV-DETAILS -SECTION START-

A. OPAQUE SURFACE ASSEMBLY DETAILS

1. Surface Name	2. Surface Type	3. Description of Assembly Layers	4. Notes	Pass	Fail
Slab On Grade4	UndergroundFloor	Slab Type = UnheatedSlabOnGrade Insulation Orientation = None Insulation R-Value = R0		☐	☐
R-38 Roof No Attic6	Roof	Asphalt shingles - 1/4 in. Vapor permeable felt - 1/8 in. Plywood - 1/2 in. Air - Cavity - Wall Roof Ceiling - 4 in. or more Wood framed roof, 16in. OC, 11.25in., R-38 Gypsum Board - 1/2 in.		☐	☐
R-19 Wall8	ExteriorWall	Stucco - 7/8 in. Vapor permeable felt - 1/8 in. Wood framed wall, 16in. OC, 5.5in., R-19 Gypsum Board - 1/2 in.		☐	☐
R-19 Wall81	InteriorWall	Stucco - 7/8 in. Vapor permeable felt - 1/8 in. Wood framed wall, 16in. OC, 5.5in., R-19 Gypsum Board - 1/2 in.		☐	☐

B. OVERHANG DETAILS (Adapted from NRCC-ENV-02-E)

This Section Does Not Apply

C. OPAQUE DOOR SUMMARY

1. Opaque Door Assembly Name / Tag or I.D.	2. Door Type	3. Certification Method	4. Operation	5. Area	6. Overall U-factor	7. Status[1]	Pass	Fail
Metal Door13	MetalUninsulatedDoubleLayerDoor	DefaultPerformance	Swinging	315	0.700	N	☐	☐

[1] Status: N - New, A – Altered, E – Existing

Project Name:	Chet Harritt ES LRC & Classroom Addition	NRCC-PRF-01-E	Page 17 of 20
Project Address:	8120 Arlette St Santee 92071	Calculation Date/Time:	11:20, Wed, Oct 09, 2019
Compliance Scope:	NewEnvelopeAndMechanical	Input File Name:	Chet Harritt ES LRC & Classroom Addition.cibd16x

NRCC-PRF-MCH-DETAILS -SECTION START-

A. MECHANICAL VENTILATION AND REHEAT *(Adapted from 2016-NRCC-MCH-03-E)*

1. DESIGN AIR FLOWS / 2. VENTILATION (§ 120.1) / Confirmed

CONDITIONED ZONE NAME	HEATING/COOLING SYSTEM ID	DESIGN PRIMARY AIR FLOW (CFM)	DESIGN PRIMARY MINIMUM AIR FLOW (CFM)	MINIMUM PRIMARY AIR FLOW FRACTION	MAXIMUM HEATING AIR FLOW (CFM)	MAXIMUM HEATING AIR FLOW FRACTION	DDC CONTROL (Y/N)	VENT SYSTEM ID	CONDITIONED AREA (ft2)	MIN. VENT PER AREA (CFM/ft2)	DESIGN NUM. OF PEOPLE	MIN. VENT PER PERSON (CFM/person)	REQ'D VENT AIR FLOW (CFM)	DESIGN VENT AIR FLOW (CFM)	TRANSFER AIRFLOW (CFM)	DCV (Y/N)	Operable Window Interlock § 140.4(n) (Y/N)	Pass	Fail
1-AC 1	AC 1	1,520	405	0.27	NA	NA	N	AC 1	956	0.42	27.00	15.00	405	405	NA	N	N	☐	☐
2-AC 2	AC 2	1,520	405	0.27	NA	NA	N	AC 2	1,194	0.34	27.00	15.00	405	405	NA	N	N	☐	☐
3-AC 3	AC 3	1,520	405	0.27	NA	NA	N	AC 3	1,190	0.34	27.00	15.00	405	405	NA	N	N	☐	☐
4-AC 4	AC 4	1,520	405	0.27	NA	NA	N	AC 4	981	0.41	27.00	15.00	405	405	NA	N	N	☐	☐
5-AC 5	AC 5	1,520	405	0.27	NA	NA	N	AC 5	966	0.42	27.00	15.00	405	405	NA	N	N	☐	☐
6-AC 6	AC 6	1,520	405	0.27	NA	NA	N	AC 6	961	0.42	27.00	15.00	405	405	NA	N	N	☐	☐
7-AC 7&8	AC 7&8	3,040	810	0.27	NA	NA	N	AC 7&8	1,890	0.32	40.00	15.00	600	600	NA	Y	N	☐	☐
8-AC 9	AC 9	1,520	405	0.27	NA	NA	N	AC 9	1,254	0.32	27.00	15.00	405	405	NA	N	N	☐	☐
9-AC 10	AC 10	1,150	450	0.39	NA	NA	N	AC 10	402	0.75	20.00	15.00	300	300	NA	N	N	☐	☐
10-FC 1/HP 1	FC 1/HP 1	NA	NA	0.00	NA	NA	N		170	0.18	2.00	15.00	30	NA	30	N	NA	☐	☐
11-FC 2/HP 2	FC 2/HP 2	NA	NA	0.00	NA	NA	N		305	0.15	2.00	22.88	46	NA	46	N	NA	☐	☐
12-FC 3/CU 1	FC 3/CU 1	NA	NA	0.00	NA	NA	N		127	0.15	0.19	100.00	19	NA	19	N	NA	☐	☐
								TOTAL	10,396		253.19		3,830	3,735	95			☐	☐

Project Name:	Chet Harritt ES LRC & Classroom Addition	NRCC-PRF-01-E	Page 18 of 20
Project Address:	8120 Arlette St Santee 92071	Calculation Date/Time:	11:20, Wed, Oct 09, 2019
Compliance Scope:	NewEnvelopeAndMechanical	Input File Name:	Chet Harritt ES LRC & Classroom Addition.cibd16x

B. ZONAL SYSTEM AND TERMINAL UNIT SUMMARY § 140.4

1. System ID	2. System Type	3. Qty	4. Rated Capacity (kBtuh) Heating	Cooling	5. Economizer	6. Zone Name	7. Airflow (cfm) Design	Min.	Min. Ratio	8. Fan BHP	Cycles	ECM Motor	Pass	Fail
FC 1/HP 1	MiniSplitHP	1	19.00	17.00	No	10-FC 1/HP 1	570	NA	NA	0.100	☐	☐	☐	☐
FC 2/HP 2	MiniSplitHP	1	19.00	17.00	No	11-FC 2/HP 2	570	NA	NA	0.100	☐	☐	☐	☐
FC 3/CU 1	MiniSplitHP	1	NA	17.00	No	12-FC 3/CU 1	570	NA	NA	0.100	☐	☐	☐	☐
1-AC 1-Trm	VAVNoReheatBox	1	NA	NA	NA	1-AC 1	1520	405	0.27	NA	NA	☐	☐	☐
2-AC 2-Trm	VAVNoReheatBox	1	NA	NA	NA	2-AC 2	1520	405	0.27	NA	NA	☐	☐	☐
3-AC 3-Trm	VAVNoReheatBox	1	NA	NA	NA	3-AC 3	1520	405	0.27	NA	NA	☐	☐	☐
4-AC 4-Trm	VAVNoReheatBox	1	NA	NA	NA	4-AC 4	1520	405	0.27	NA	NA	☐	☐	☐
5-AC 5-Trm	VAVNoReheatBox	1	NA	NA	NA	5-AC 5	1520	405	0.27	NA	NA	☐	☐	☐
6-AC 6-Trm	VAVNoReheatBox	1	NA	NA	NA	6-AC 6	1520	405	0.27	NA	NA	☐	☐	☐
7-AC 7&8-Trm	VAVNoReheatBox	2	NA	NA	NA	7-AC 7&8	3040	810	0.27	NA	NA	☐	☐	☐
8-AC 9-Trm	VAVNoReheatBox	1	NA	NA	NA	8-AC 9	1520	405	0.27	NA	NA	☐	☐	☐
9-AC 10-Trm	VAVNoReheatBox	1	NA	NA	NA	9-AC 10	1150	450	0.39	NA	NA	☐	☐	☐

C. EXHAUST FAN SUMMARY

This Section Does Not Apply

D. DHW EQUIPMENT SUMMARY – *(Adapted from NRCC-PLB-01)*

This Section Does Not Apply

E. MULTI-FAMILY CENTRAL DHW SYSTEM DETAILS

This Section Does Not Apply

F. SOLAR HOT WATER HEATING SUMMARY (Adapted from NRCC-STH-01)

This Section Does Not Apply

Project Name:	Chet Harritt ES LRC & Classroom Addition	NRCC-PRF-01-E	Page 19 of 20
Project Address:	8120 Arlette St Santee 92071	Calculation Date/Time:	11:20, Wed, Oct 09, 2019
Compliance Scope:	NewEnvelopeAndMechanical	Input File Name:	Chet Harritt ES LRC & Classroom Addition.cibd16x

G. MECHANICAL HVAC ACCEPTANCE TESTS & FORMS *(Adapted from 2016-NRCC-MCH-01-E)* § RA4

Declaration of Required Acceptance Certificates (NRCA) – Acceptance Certificates that may be submitted. (Retain copies and verify forms are completed and signed to post in field for Field Inspector to verify).

Equipment Requiring Testing or Verification	# of units	MCH-02A Outdoor Air	MCH-03A Single Zone Unitary	MCH-04A Air Dist. Ducts	MCH-05A Economizer Controls	MCH-06A DCV	MCH-07A Supply Fan VAV	MCH-08A Valve leakage	MCH-09A Supply Water Temp. Reset	MCH-10A Hyd. Variable Flow Control	MCH-11A Auto Demand Shed Control	MCH-12A FDD for DX Units	MCH-13A Auto FDD for Air & Zone	MCH-14A Dist. Energy Storage DX AC	MCH-15A TES Systems	MCH-16A Supply Air Temp. Reset	MCH-17A Condenser Water Reset Controls	MCH-18A ECMS	Pass	Fail
AC 1	1	X	--	--	X	--	--	--	--	--	--	--	--	--	--	--	--	--	☐	☐
AC 2	1	X	--	--	X	--	--	--	--	--	--	--	--	--	--	--	--	--	☐	☐
AC 3	1	X	--	--	X	--	--	--	--	--	--	--	--	--	--	--	--	--	☐	☐
AC 4	1	X	--	--	X	--	--	--	--	--	--	--	--	--	--	--	--	--	☐	☐
AC 5	1	X	--	--	X	--	--	--	--	--	--	--	--	--	--	--	--	--	☐	☐
AC 6	1	X	--	--	X	--	--	--	--	--	--	--	--	--	--	--	--	--	☐	☐
AC 7&8	2	X	--	--	X	X	--	--	--	--	--	--	--	--	--	--	--	--	☐	☐
AC 9	1	X	--	--	X	--	--	--	--	--	--	--	--	--	--	--	--	--	☐	☐
AC 10	1	X	--	--	X	--	--	--	--	--	--	--	--	--	--	--	--	--	☐	☐
FC 1/HP 1	1	X	--	--	--	--	--	--	--	--	--	--	--	--	--	--	--	--	☐	☐
FC 2/HP 2	1	X	--	--	--	--	--	--	--	--	--	--	--	--	--	--	--	--	☐	☐
FC 3/CU 1	1	X	--	--	--	--	--	--	--	--	--	--	--	--	--	--	--	--	☐	☐

H. EVAPORATIVE COOLER SUMMARY

This Section Does Not Apply

ENVELOPE MANDATORY MEASURES: NONRESIDENTIAL — ENV-MM

Project Name	Date
Chet Harritt ES LRC & Classroom Addition	*10/9/2019*

DESCRIPTION

Building Envelope Measures:

§110.8(a):	Installed insulating material shall have been certified by the manufacturer to comply with the California Quality Standards for insulating material, Title 20 Chapter 4, Article 3.
§110.8(c):	All Insulating Materials shall be installed in compliance with the flame spread rating and smoke density requirements of Sections 2602 and 707 of Title 24, Part 2.
§110.8(g):	Heated slab floors shall be insulated according to the requirements in Table 110.8-A.
§110.7(a):	All Exterior Joints and openings in the building that are observable sources of air leakage shall be caulked, gasketed, weatherstripped or otherwise sealed.
§110.6(a):	Manufactured fenestration products and exterior doors shall have air infiltration rates not exceeding 0.3 cfm/ft.^{2} of window area, 0.3 cfm/ft.^{2} of door area for residential doors, 0.3 cfm/ft.^{2} of door area for nonresidential single doors (swinging and sliding), and 1.0 cfm/ft.^{2} for nonresidential double doors (swinging).
§110.6(a):	Fenestration U-factor shall be rated in accordance with NFRC 100, or the applicable default U-factor.
§110.6(a) :	Fenestration SHGC shall be rated in accordance with NFRC 200, or NFRC 100 for site-built fenestration, or the applicable default SHGC.
§110.6(b):	Site Constructed Doors, Windows and Skylights shall be caulked between the unit and the building, and shall be weatherstripped (except for unframed glass doors and fire doors).
§120.7(a):	The opaque portions of the roof/ceiling that separates conditioned spaces from unconditioned spaces or ambient air shall meet the applicable U-Factor requirements as follows: **Metal Building-** The weighted average U-factor of the roof assembly shall not exceed 0.098. **Wood Framed and Others-** The weighted average U-factor of the roof assembly shall not exceed 0.075.
§120.7(b):	The opaque portions of walls that separate conditioned spaces from unconditioned spaces or ambient air shall meet the applicable U-factor as follows: **Metal Building-** The weighted average U-factor of the wall assembly shall not exceed 0.113. **Metal Framed-** The weighted average U-factor of the wall assembly shall not exceed 0.151. **Light Mass Walls-** A 6 inch or greater Hollow Core Concrete Masonry Unit shall have a U-factor not to exceed 0.440. **Heavy Mass Walls-** An 8 inch or greater Hollow Core Concrete Masonry Unit shall have a U-factor not to exceed 0.690. **Wood Framed and Others-** The weighted average U-factor of the wall assembly shall not exceed 0.110. **Spandrel Panels and Opaque Curtain Wall-** The weighted average U-factor of the spandrel panels and opaque curtain wall assembly shall not exceed 0.280. **Demising Walls-**. The opaque portions of framed demising walls shall meet the requirements of Item A or B below: A. Wood framed walls shall be insulated to meet a U-factor not greater than 0.099. B. Metal Framed walls shall be insulated to meet a U-factor not greater than 0.151.
§120.7(c):	The opaque portions of floors and soffits that separate conditioned spaces from unconditioned spaces or ambient air shall meet the applicable U-Factor requirements as follows: **Raised Mass Floors-** Shall have a minimum of 3 inches of lightweight concrete over a metal deck or the weighted average U-factor of the floor assembly shall not exceed 0.269. **Other Floors-**The weighted average U-factor of the floor assembly shall not exceed 0.071.

IDENTIFICATION STAMP
DIV. OF THE STATE ARCHITECT
APP. 04-118693 INC:
REVIEWED FOR
SS ☑ FLS ☑ ACS ☑
DATE: 03.13.2020

Date

Revison

PMPE
CONSULTANTS
MECHANICAL ENGINEERS
5755 Oberlin Drive, Suite #102
San Diego, CA 92121
Tel: (858) 642-0800
Fax: (858) 642-0802

Consultant

REGISTERED PROFESSIONAL ENGINEER
MAX PAJOUHESH
M27488
EXP.:06/30/21
MECHANICAL
STATE OF CALIFORNIA

Engineer

studioWC
ARCHITECTURE + ENGINEERING
515 Encinitas Blvd. Ste. 201, Encinitas, California 92024
Telephone: (760)753-6800 Fax: (760)452-7541

LICENSED ARCHITECT
ROBERT D. WEBB A.I.A.
C-28036
OCTOBER 31, 2021
STATE OF CALIFORNIA

CHET F. HARRITT ELEM. SCHOOL
LRC & CLASSROOM ADDITION
SANTEE SCHOOL DISTRICT

MECHANICAL TITLE 24

Drawn: MM

Checked: MP

Date:

Job:

M0.4

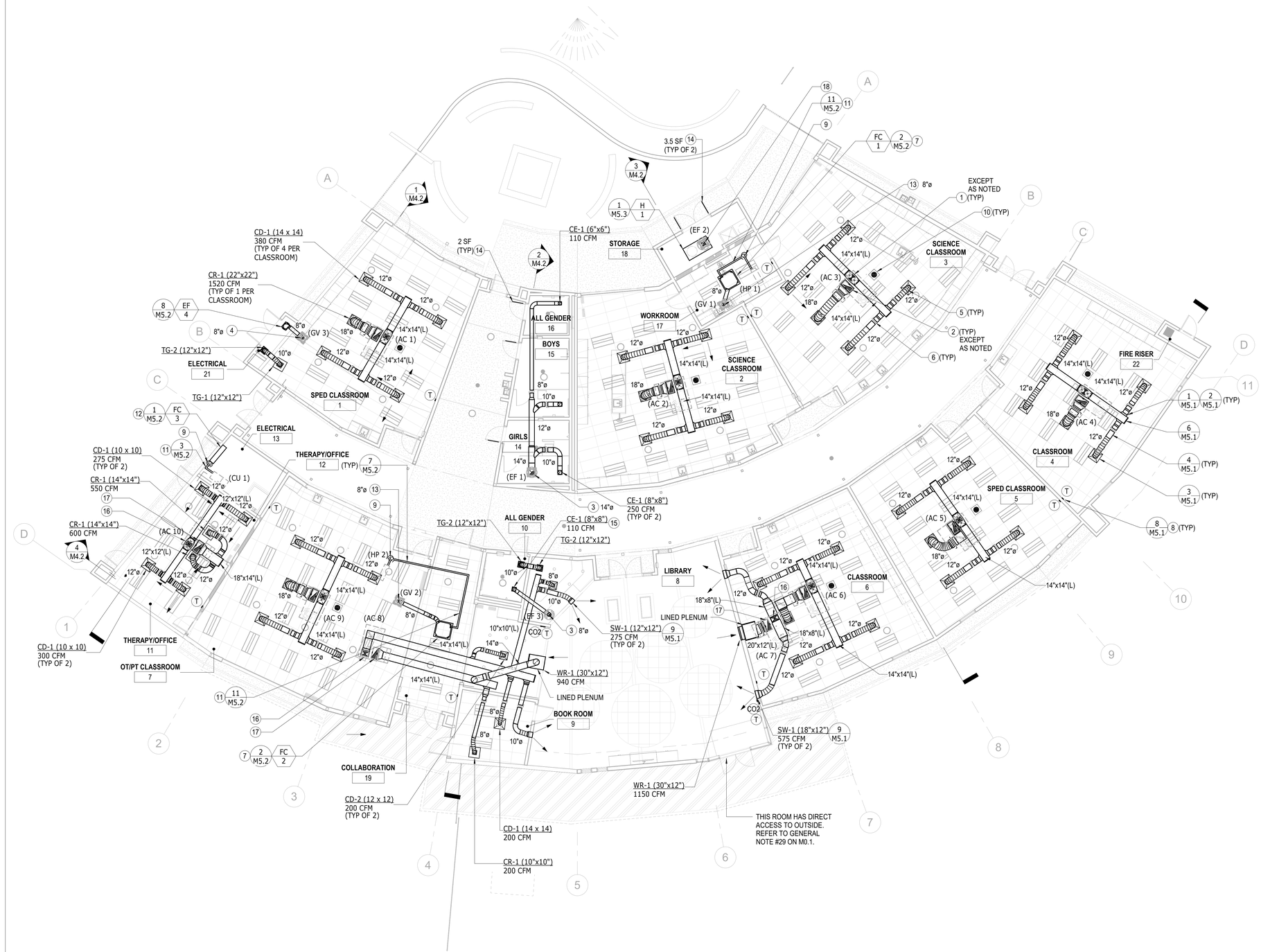

MECHANICAL FLOOR PLAN | 1/8" = 1'-0" | 1

WALL LEGEND

NEW WALL

NEW RATED WALL

KEY NOTES

1. 18"x14" (L) LINED SA DUCT UP THRU ROOF. EXTEND AND TRANSITION TO CONNECT TO AC UNIT WITH FLEX CONNECTION, FOR CONTINUATION SEE ROOF PLAN.
2. 24"x12" (L) LINED RA DUCT UP THRU ROOF. EXTEND AND TRANSITION TO CONNECT TO AC UNIT WITH FLEX CONNECTION, FOR CONTINUATION SEE ROOF PLAN.
3. EA DUCT UP THRU ROOF. EXTEND AND TRANSITION TO CONNECT TO EXHAUST FAN.
4. EA DUCT UP THRU ROOF. EXTEND AND TRANSITION TO CONNECT TO GRAVITY VENTILATOR.
5. FLEXIBLE DUCT MAXIMUM 5 FEET LONG.
6. PROVIDE MVD AT ALL BRANCHES REGARDLESS IF SHOWN OR NOT.
7. PROVIDE CEILING MOUNTED FAN COIL. RUN REFRIGERANT PIPES TO ASSOCIATED OUTDOOR UNIT, SIZE PER MANUFACTURER RECOMMENDATION.
8. PROVIDE ROOM TEMPERATURE SENSOR/THERMOSTAT. COORDINATE EXACT LOCATION WITH THE ARCHITECT. PROVIDE WITH INSULATED BACK PLATE. SEAL WALL AND BACK PLATE PENETRATIONS AIR TIGHT.
9. REFRIGERANT PIPES UP THRU ROOF.
10. PROVIDE OCCUPANCY SENSOR, "PERFECTSENSE" MODEL# PS-HC24-R AT THE CEILING TO ACTIVEATE AC UNIT. CONFIRM THE MODEL NUMBER WITH THE MANUFACTURER FOR THE ROOM SIZE AND LOCATION TO INSTALL.
11. INSTALL ALL REFRIGERATION PIPES ABOVE CEILING IN CPVC SLEEVE.
12. PROVIDE WALL MOUNTED FAN COIL. RUN REFRIGERANT PIPES TO ASSOCIATED OUTDOOR UNIT, SIZE PER MANUFACTURER RECOMMENDATION.
13. OSA DUCT UP THRU ROOF. EXTEND AND TRANSITION TO CONNECT TO GRAVITY VENTILATOR.
14. PROVIDE LOW LEVEL DOOR LOUVER PER SIZE SHOWN ON DRAWING WITH 50% FREE AREA, COORDINATE WITH THE ARCHITECT REGARDING COLOR AND MATERIAL.
15. 8"ø EA DUCT TRANSITION TO CONNECT TO CE-1. PROVIDE MVD IN EA DUCT RISER.
16. 18"x12" (L) SA DUCT UP THRU ROOF. EXTEND AND TRANSITION TO CONNECT TO AC UNIT WITH FLEX CONNECTION, FOR CONTINUATION SEE ROOF PLAN.
17. 24"x12" (L) RA DUCT UP THRU ROOF. EXTEND AND TRANSITION TO CONNECT TO AC UNIT WITH FLEX CONNECTION, FOR CONTINUATION SEE ROOF PLAN.
18. 8"x8" EA DUCT FROM FILN HOOD RISE UP AND TRANSITION TO CONNECT TO EF-2.

GENERAL NOTES

1. FOR EXACT LOCATION OF DIFFUSERS AND GRILLES REFER TO ARCHITECTURAL REFLECTED CEILING PLAN. IF THERE ARE ANY DISCREPANCIES BETWEEN ARCHITECTURAL RCP AND THIS DRAWING, PRIOR TO SHOP DRAWINGS AND INSTALLATION COORDINATE WITH ARCHITECT OF RECORD.
2. PRIOR TO INSTALLATION, COORDINATE EXACT LOCATION OF ROOM TEMPERATURE SENSORS / THERMOSTATS WITH THE ARCHITECT OF RECORD. ACCESS TO THERMOSTATS SHALL COMPLY WITH DETAIL 8/M5.1. FOR ALL THERMOSTATS PROVIDE INSULATED BACKPLATE.
3. ALL SA AND RA SQUARE AND RECTANGULAR DUCTWORK SHALL BE LINED REGARDLESS IF SHOWN OR NOT.
4. PROVIDE DUCT HANGERS AND SUPPORTS IN COMPLIANCE WITH DETAILS ON M5.1. PROVIDE SEISMIC BRACING AT ALL ELBOWS AND END OF THE DUCT RUNS AND BOTTOM OF RISERS. IF ADDITIONAL DETAILS ARE REQUIRED COMPLY WITH "SMACNA" GUIDELINE.
5. COORDINATE ALL WORK WITH FIRE SPRINKLER HEADS, LIGHTS AND PLUMBING. PROVIDE SHOP DRAWINGS FOR REVIEW AND COMMENTS.
6. PROVIDE CEILING ACCESS PANEL AT HARD LID CEILING TO ACCESS MANUAL VOLUME DAMPERS AND FIRE / SMOKE DAMPERS.
7. FOR OPERABLE WINDOWS AND DOORS OPENING TO OUTSIDE REQUIRING SENSORS, REFER TO CONTROL DIAGRAMS.
8. FOR TAB REQUIRMENTS REFER TO M0.1 GENERAL NOTE #20.
9. FOR COMPLIANCE WITH CFC 915, SEE CO DETECTORS' ON ELECTRICAL DRAWING E5.1.
10. REFER TO MECHANICAL GENERAL NOTE #10 ON DRAWING M0.1 FOR DUCTWORK AND PIPING BURNING CHARACTERISTICS.

IDENTIFICATION STAMP
DIV. OF THE STATE ARCHITECT
APP. 04-118693 INC:
REVIEWED FOR
SS ☑ FLS ☑ ACS ☑
DATE: 03.13.2020

Revision | Date

PMPE CONSULTANTS MECHANICAL ENGINEERS
5755 Oberlin Drive, Suite #102
San Diego, CA 92121
Tel: (858) 642-0800
Fax: (858) 642-0802
Consultant

REGISTERED PROFESSIONAL ENGINEER
MAX PAJOUHESH
M27488
EXP. 06/30/21
MECHANICAL
STATE OF CALIFORNIA
Engineer

studioWC
ARCHITECTURE + ENGINEERING
515 Encinitas Blvd, Ste 201 Encinitas, California 92024
Telephone: (760) 634-8800 Fax: (760) 452-7341

LICENSED ARCHITECT
ROBERT D. WEBB JR.
C-28036
OCTOBER 31, 2021
STATE OF CALIFORNIA

CHET F. HARRITT ELEM. SCHOOL
LRC & CLASSROOM ADDITION
SANTEE SCHOOL DISTRICT

MECHANICAL FLOOR PLAN

Drawn: MM
Checked: MP
Date:
Job:

M2.1

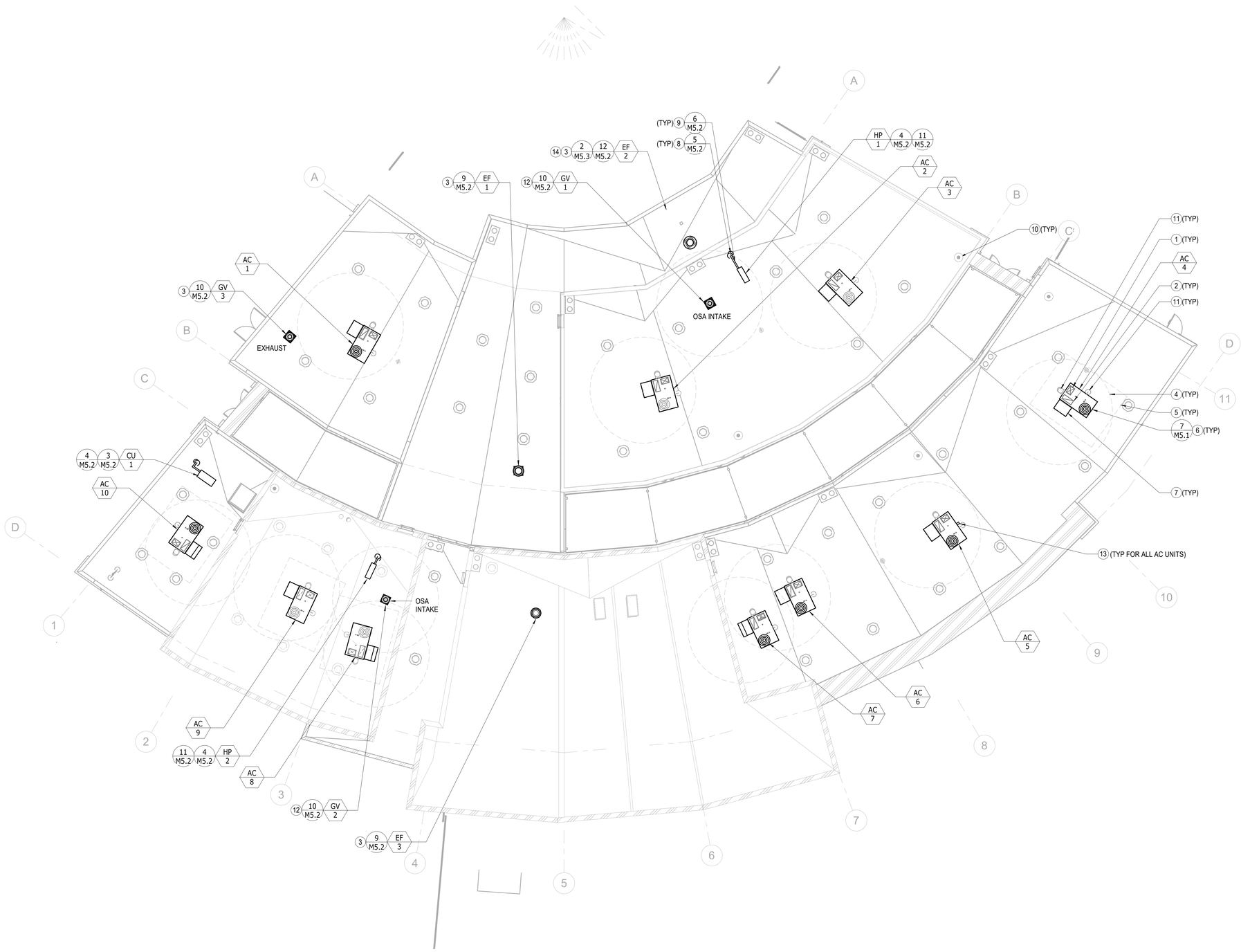

KEY NOTES

1. LINED SA DUCT DOWN THRU THE ROOF. PROVIDE FLEX CONNECTION AT DUCT CONNECTING TO UNIT.
2. LINED RA DUCT DOWN THRU THE ROOF. PROVIDE FLEX CONNECTION AT DUCT CONNECTING TO UNIT.
3. EA DUCT DOWN THRU THE ROOF. MAINTAIN A MINIMUM OF 10 FEET BETWEEN EA DISCHARGE AND OUTSIDE AIR INTAKE.
4. THE CIRCLE SHOWS REQUIRED 10 FEET DISTANCE BETWEEN OSA INTAKE AND PLUMBING VENTS AND EXHAUST DISCHARGE.
5. AC UNIT REQUIRED SERVICE CLEARANCE, VERIFY WITH EQUIPMENT MANUFACTURER.
6. PROVIDE PRE-MANUFACTURED ROOF CURB FOR AC UNITS. SEE EQUIPMENT SCHEDULE. FOR ANCHORAGE TO ROOF STRUCTURE REFER TO STRUCTURAL DRAWINGS.
7. MAINTAIN A MINIMUM 10 FEET BETWEEN ECONOMIZER / OUTSIDE AIR INTAKE AND PLUMBING VENTS AND EXHAUST DISCHARGE.
8. REFRIGERANT PIPES DOWN THRU ROOF. EXTEND AND CONNECT TO ASSOCIATED FAN COIL UNIT.
9. PROVIDE ALUMINUM COVER / SLEEVE FOR ALL EXPOSED REFRIGERATION PIPES.
10. COORDINATE EXACT LOCATION OF PLUMBING VENTS WITH PLUMBING TO MAINTAIN A MINIMUM OF 10 FEET AWAY FROM AC UNIT'S OUTSIDE AIR INTAKE.
11. COORDINATE EXACT LOCATION OF GAS AND CONDENSATE DRAIN PIPES THRU ROOF WITH PLUMBING.
12. OUTSIDE AIR INTAKE DOWN THRU ROOF. MAINTAIN A MINIMUM 10 FEET BETWEEN OUTSIDE AIR INTAKE AND PLUMBING VENTS AND EXHAUST DISCHARGE.
13. PROVIDE PRE-MANUFACTURED FLUE DEFLECTOR AND EXTEND FLUE DISCHARGE ABOVE TOP OF AC UNIT.
14. EF SHALL BE MOUNTED 18 INCHES FROM THE WALL.

GENERAL NOTES

1. MAINTAIN A MINIMUM OF 10 FEET BETWEEN AC UNITS / GRAVITY VENTILATOR OUTSIDE AIR INTAKE AND PLUMBING VENTS AND EXHAUST AIR DISCHARGE.
2. AS A PART OF SHOP DRAWINGS AND PRIOR TO CONSTRUCTION, COORDINATE EXACT LOCATION OF AC UNITS, EXHAUST FANS AND DUCTS THRU ROOF WITH STRUCTURAL AND ARCHITECTURAL.
3. AS A PART OF SHOP DRAWINGS AND PRIOR TO CONSTRUCTION, COORDINATE WITH PLUMBING FOR VENTS THRU ROOF, GAS AND CONDENSATE DRAIN PIPING. COORDINATE WITH ELECTRICAL.
4. TAG ALL EQUIPMENT TO CORRESPOND WITH EQUIPMENT SCHEDULE OR AS DIRECTED BY THE OWNER. COORDINATE WITH OWNER FOR NUMBERING SYSTEM.
5. FOR ROOF MOUNTED PIPING PROVIDE ADJUSTABLE PIPE SUPPORT WITH MAXIMUM SPACING OF 6 FEET ON CENTER. FOR PIPE SUPPORT DETAIL ON ROOF SEE DETAIL 6/M5.2.

MECHANICAL ROOF PLAN | 1/8" = 1'-0" | 1

IDENTIFICATION STAMP
DIV. OF THE STATE ARCHITECT
APP. 04-118693 INC:
REVIEWED FOR
SS ☑ FLS ☑ ACS ☑
DATE: 03.13.2020

Revison	Date

PMPE CONSULTANTS MECHANICAL ENGINEERS
5755 Oberlin Drive, Suite #102
San Diego, CA 92121
Tel: (858) 642-0800
Fax: (858) 642-0802
Consultant

REGISTERED PROFESSIONAL ENGINEER
MAX PAJOUHESH
M27488
EXP. 06/30/21
MECHANICAL
STATE OF CALIFORNIA
Engineer

studioWC
ARCHITECTURE + ENGINEERING
515 Encinitas Blvd, Ste 201, Encinitas, California 92024
Telephone: (760) 634-8800 Fax: (760) 452-7341

LICENSED ARCHITECT
ROBERT D. WEBB
C-28036
OCTOBER 31, 2021
STATE OF CALIFORNIA

CHET F. HARRITT ELEM. SCHOOL
LRC & CLASSROOM ADDITION
SANTEE SCHOOL DISTRICT

MECHANICAL ROOF PLAN

Drawn: MM
Checked: MP
Date:
Job:

M4.1

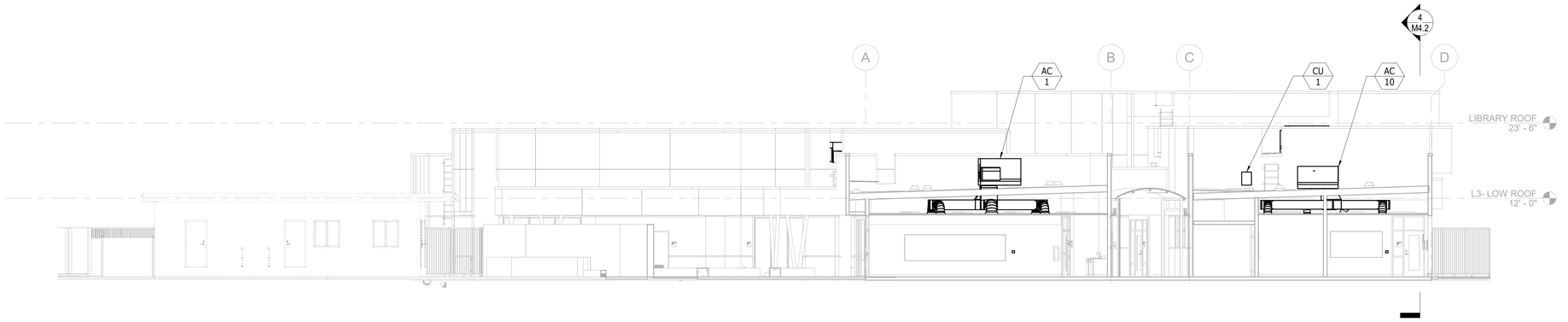

MECHANICAL SECTION NORTH | 1/8" = 1'-0" | 1

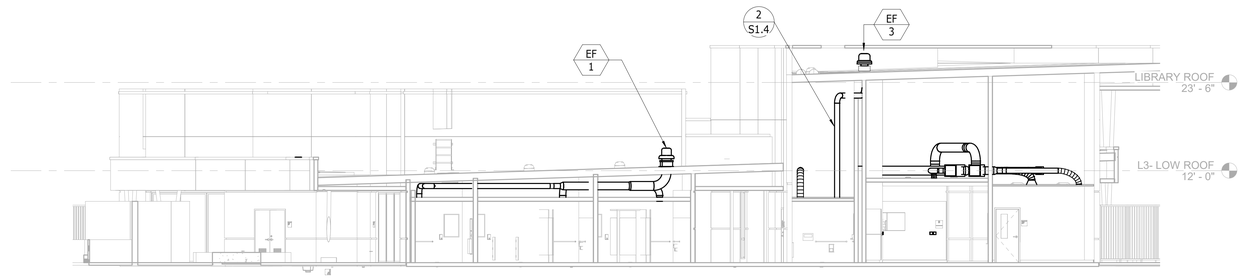

MECHANICAL SECTION NORTH | 1/8" = 1'-0" | 2

MECHANICAL SECTION NORTH | 1/8" = 1'-0" | 3

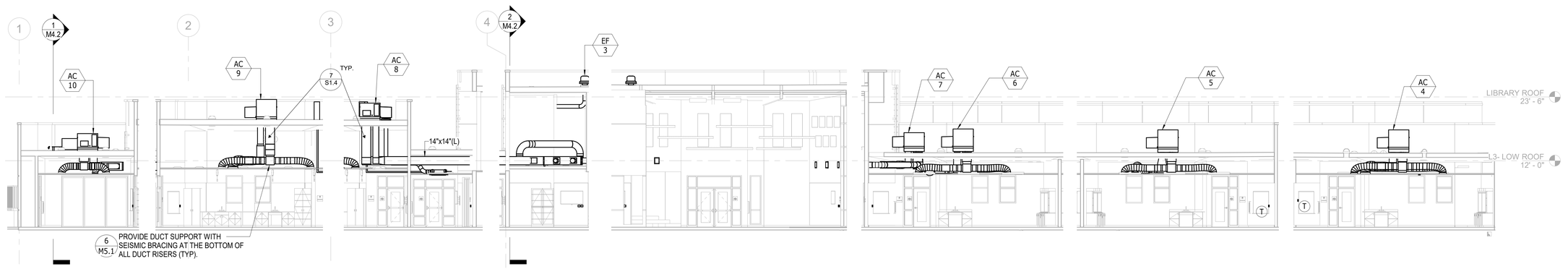

MECHANICAL SECTION WEST | 1/8" = 1'-0" | 4

IDENTIFICATION STAMP
DIV. OF THE STATE ARCHITECT
APP. 04-118693 INC:
REVIEWED FOR
SS ☑ FLS ☑ ACS ☑
DATE: 03.13.2020

Revison	Date

PMPE CONSULTANTS MECHANICAL ENGINEERS
5755 Oberlin Drive, Suite #102
San Diego, CA 92121
Tel: (858) 642-0800
Fax: (858) 642-0802
Consultant

REGISTERED PROFESSIONAL ENGINEER
MAX PAJOUHESH
M27488
EXP. 06/30/21
MECHANICAL
STATE OF CALIFORNIA
Engineer

studioWC
ARCHITECTURE + ENGINEERING
515 Encinitas Blvd, Ste 201, Encinitas, California 92024
Telephone: (760) 634-8800 Fax: (760) 452-7341

LICENSED ARCHITECT
ROBERT D. WEBB
C-28036
OCTOBER 31, 2021
STATE OF CALIFORNIA

CHET F. HARRITT ELEM. SCHOOL
LRC & CLASSROOM ADDITION
SANTEE SCHOOL DISTRICT

MECHANICAL SECTIONS

Drawn: MM
Checked: MP
Date:
Job:

M4.2

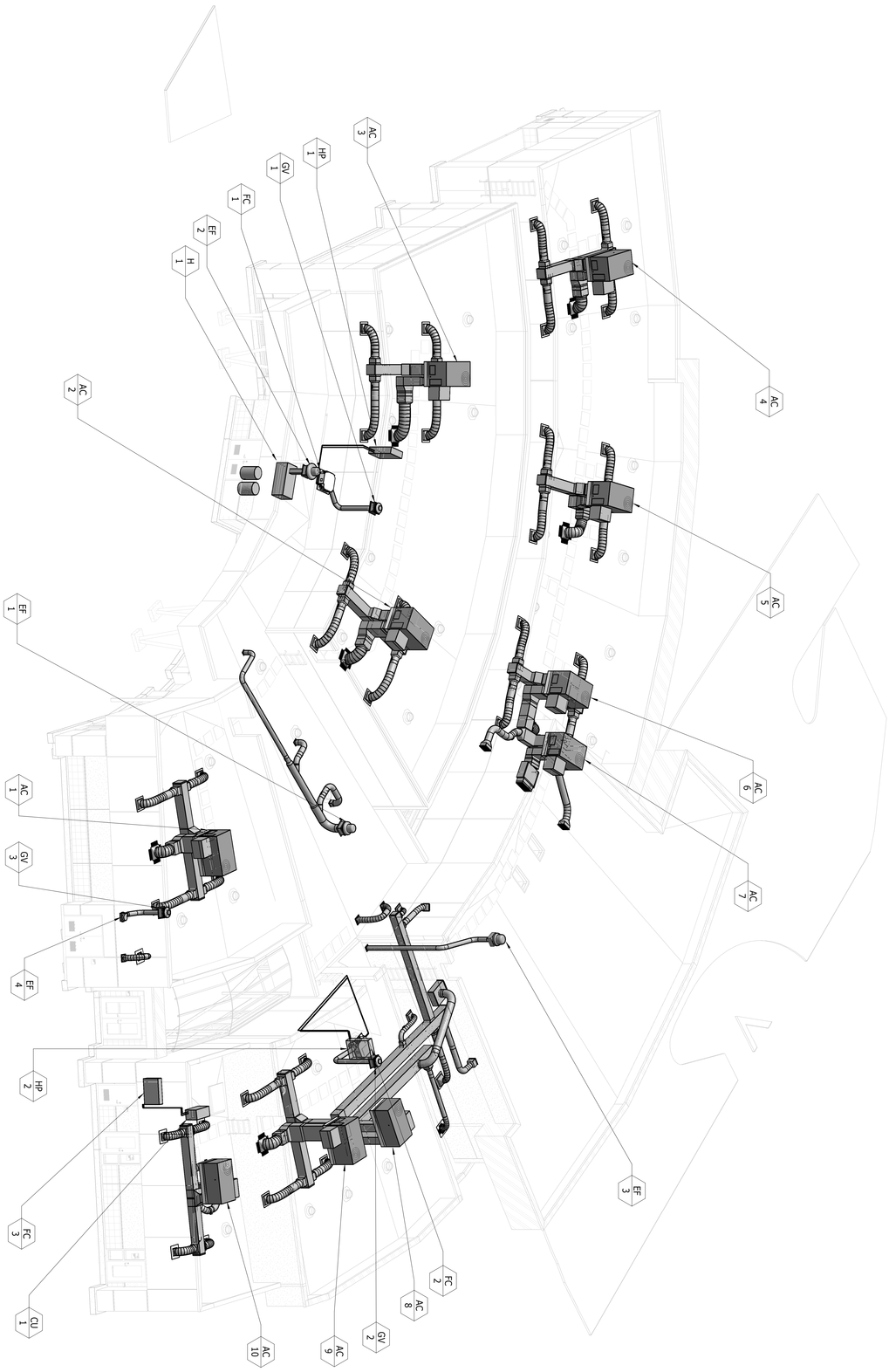

THIS DRAWING IS FOR REFERENCE ONLY AND DOES NOT SHOW ALL SYSTEMS, EQUIPMENT, PIPING, DUCTWORK AND ACCESSORIES. FLOOR PLANS, ROOF PLAN, SECTIONS AND DETAILS SUPERCEDE THIS DRAWING.

MECHANICAL ISOMETRIC

1

IDENTIFICATION STAMP
DIV. OF THE STATE ARCHITECT
APP. 04-118693 INC:
REVIEWED FOR
SS ☐ FLS ☐ ACS ☐
DATE: 03.13.2020

Drawn:	MM
Checked:	MP
Date:	
Job:	

M4.3

MECHANICAL ISOMETRIC

CHET F. HARRITT ELEM. SCHOOL

LRC & CLASSROOM ADDITION

SANTEE SCHOOL DISTRICT

LICENSED ARCHITECT
STATE OF CALIFORNIA
ROBERT D. WEBB
C-28036
OCTOBER 31, 2021

studiowc
ARCHITECTURE + ENGINEERING
515 Encinitas Blvd. Ste. 201, Encinitas, California 92024
Telephone: (760)753-6800 Fax: (760)452-7541

REGISTERED PROFESSIONAL ENGINEER
STATE OF CALIFORNIA
MAX PATIONNEER
M27488
SEP 30, 2021
MECHANICAL
Engineer

PMPE
CONSULTANTS
MECHANICAL ENGINEERS
5755 Oberlin Drive, Suite #102
San Diego, CA 92121
Tel: (858) 642-0800
Fax: (858) 642-0802
Consultant

Revison	Date

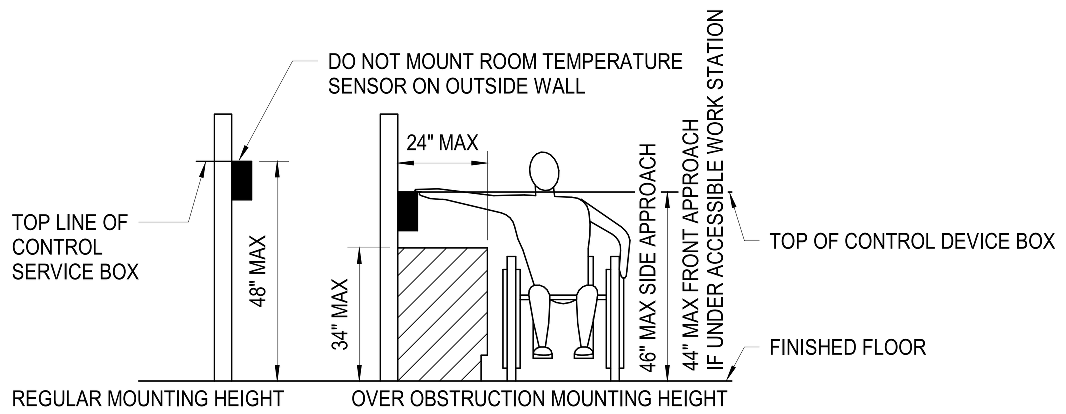

FOR EXACT LOCATION OF THERMOSTAT COORDINATE WITH ARCHITECT

PER CBC SECTION 11B-308.2.2, 11B-308.3.2 AND 11B-309

NOTE:

ALL ROOM TEMPERATURE SENSORS / THERMOSTATS SHALL BE MOUNTED ON INSULATED BACK PLATE AND PENETRATIONS THRU WALL AND BACK PLATE SHALL BE SEALED AIR TIGHT.

8/M5.1 MOUNTING HEIGHT OVER OBSTRUCTION
SCALE: NTS

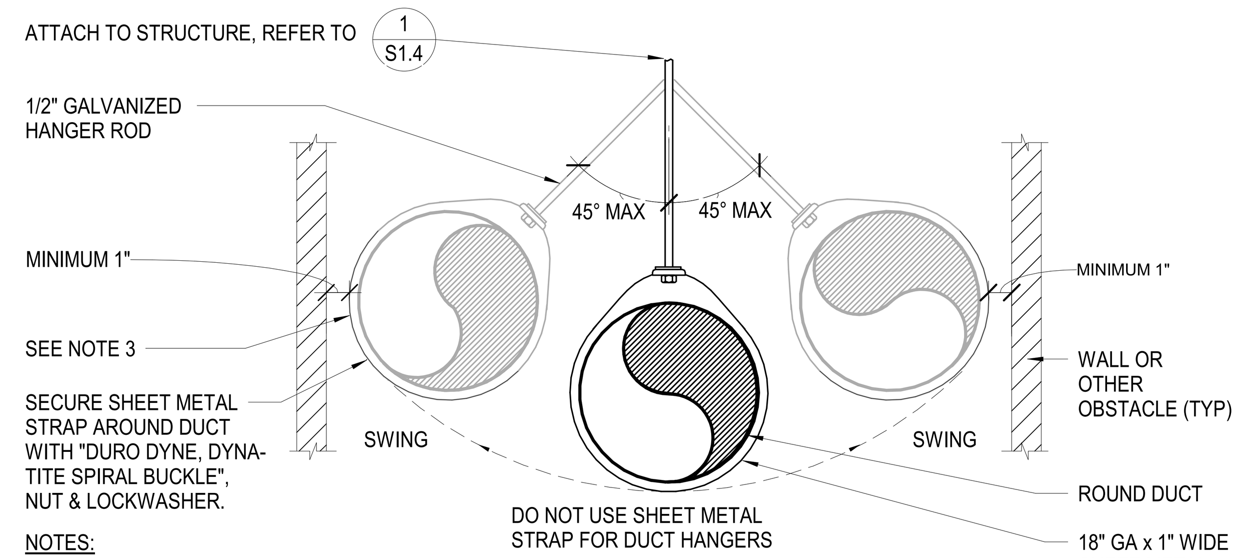

NOTES:

1. SEISMIC BRACING NOT REQUIRED IF TOP OF DUCT TO ANCHORAGE TO BUILDING STRUCTURE IS 12" MAX
2. HANGER SPACING MAX 10'.
3. ALLOW FOR DUCT SWING AND KEEP MIN 1" BETWEEN EDGE OF THE SWINGING DUCT AND ANY OBSTACLE (DUCT, WALL, EQUIPMENT, ETC.,)
4. REGARDLESS OF LENGTH OF HANGER ROD, PROVIDE TRANSVERSE BRACE AT ALL ELBOWS AND THE END OF EACH DUCT RUN TO ATTACH TO STRUCTURE AS SHOWN FOR HANGER RODS MORE THAN 12" IN LENGTH.

5/M5.1 FOR DUCT ADJACENT TO WALL AND HANGER RODS 12" OR LESS IN LENGTH
SCALE: NTS

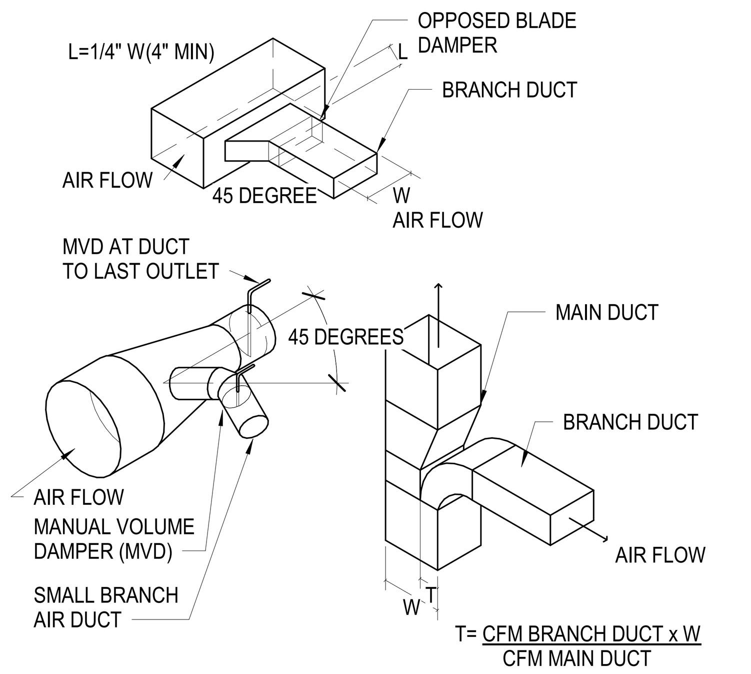

1/M5.1 BRANCH DUCT TAKE-OFF
SCALE: NTS

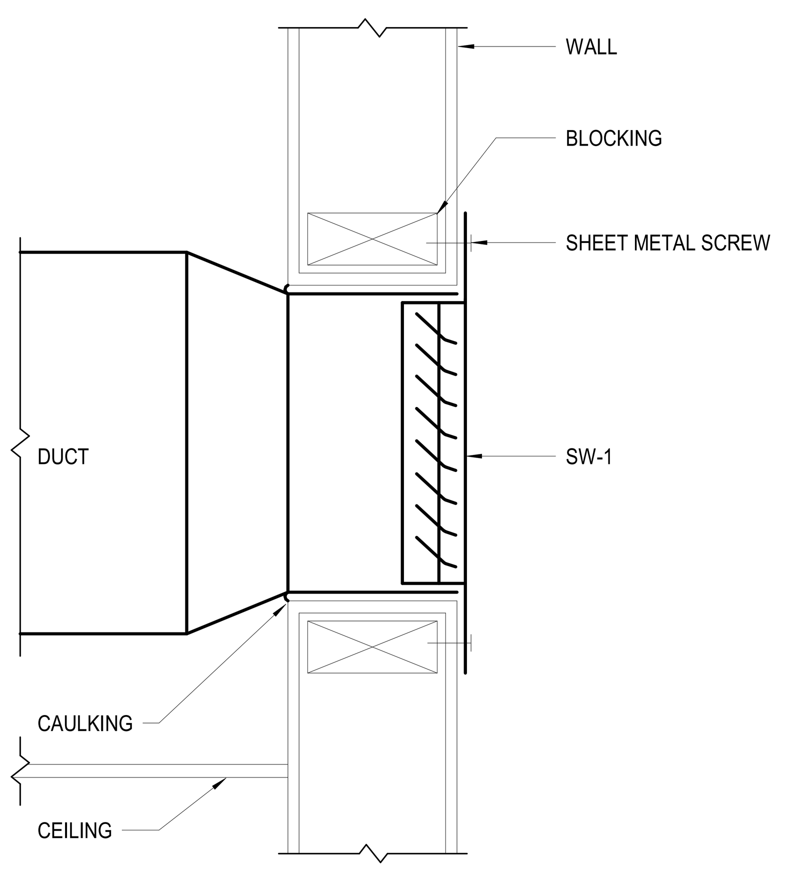

9/M5.1 WALL DIFFUSER MOUNTING DETAIL
SCALE: NTS

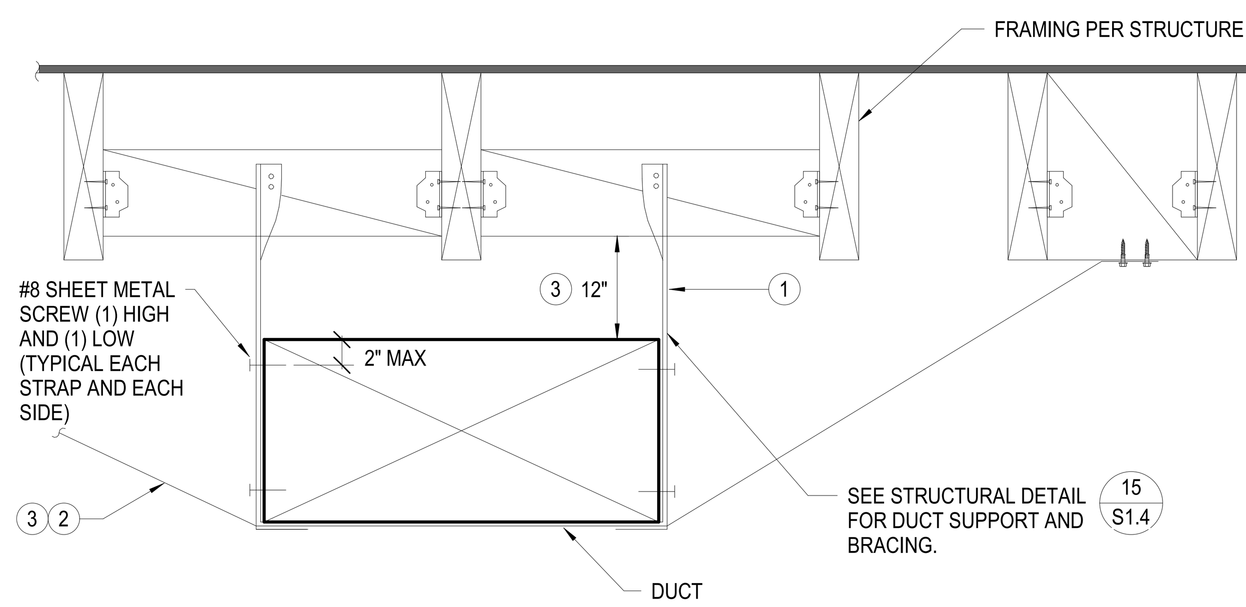

NOTES:

(1) 1"X18 GA SHEET METAL HANGER AT MAXIMUM 10 FEET ON CENTER. IN ADDITIION PROVIDE AT THE ELBOWS, TEES, END OF RUNS AND BOTTOM OF RISERS.

(2) 1"X18 GA SHEET METAL SEISMIC BRACING. PROVIDE TRANSVERSE BRACING AT MAXIMUM 30 FEET ON CENTER, AND PROVIDE LONGITUDINAL BRACING AT MAXIMUM 60 FEET ON CENTER. IN ADDITION PROVIDE AT ELBOWS, TEES, AND BOTTOM OF RISERS.

(3) PROVIDE 1"X18 GA SHEET METAL VERTICAL HANGERS AND SEISMIC BRACING IF TOP OF DUCT IS MORE THAN 12" FROM ATTACHMENT TO STRUCTURE.

6/M5.1 SQUARE / RECTANGULAR DUCT SUPPORT
SCALE: NTS

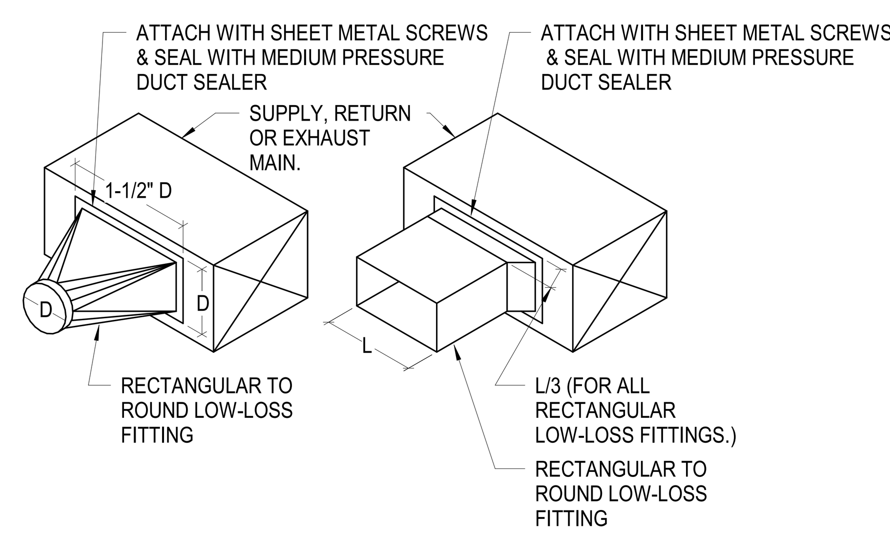

2/M5.1 LOW-LOSS FITTING
SCALE: NTS

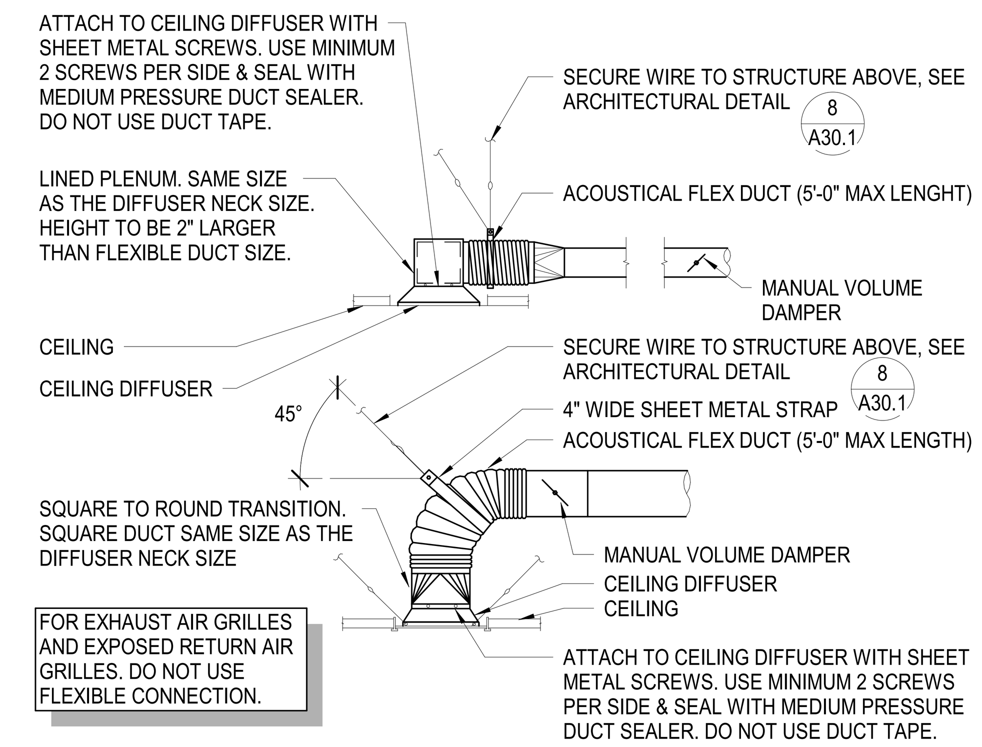

NOTES:

1. FLEXIBLE DUCT SHALL COMPLY WITH STATE FIRE MARSHALL CRITERIA AND SHALL NOT EXCEED FLAME SPREAD OF 25 AND SMOKE DEVELOPED RATING OF NOT MORE THAN 50 WHEN TESTED AS A COMPOSITE INSULATION INCLUDING INSULATION, FACING MATERIALS, TAPES AND ADHESIVES AS NORMALLY APPLIED.
2. SUPPLY AIR DIFFUSERS SHALL BE LOCATED A MINIMUM OF 3'-0" FROM SMOKE DETECTORS. PRIOR TO INSTALLATION COORDINATE EXACT LOCATION.

3/M5.1 CEILING DIFFUSER CONNECTION
SCALE: NTS

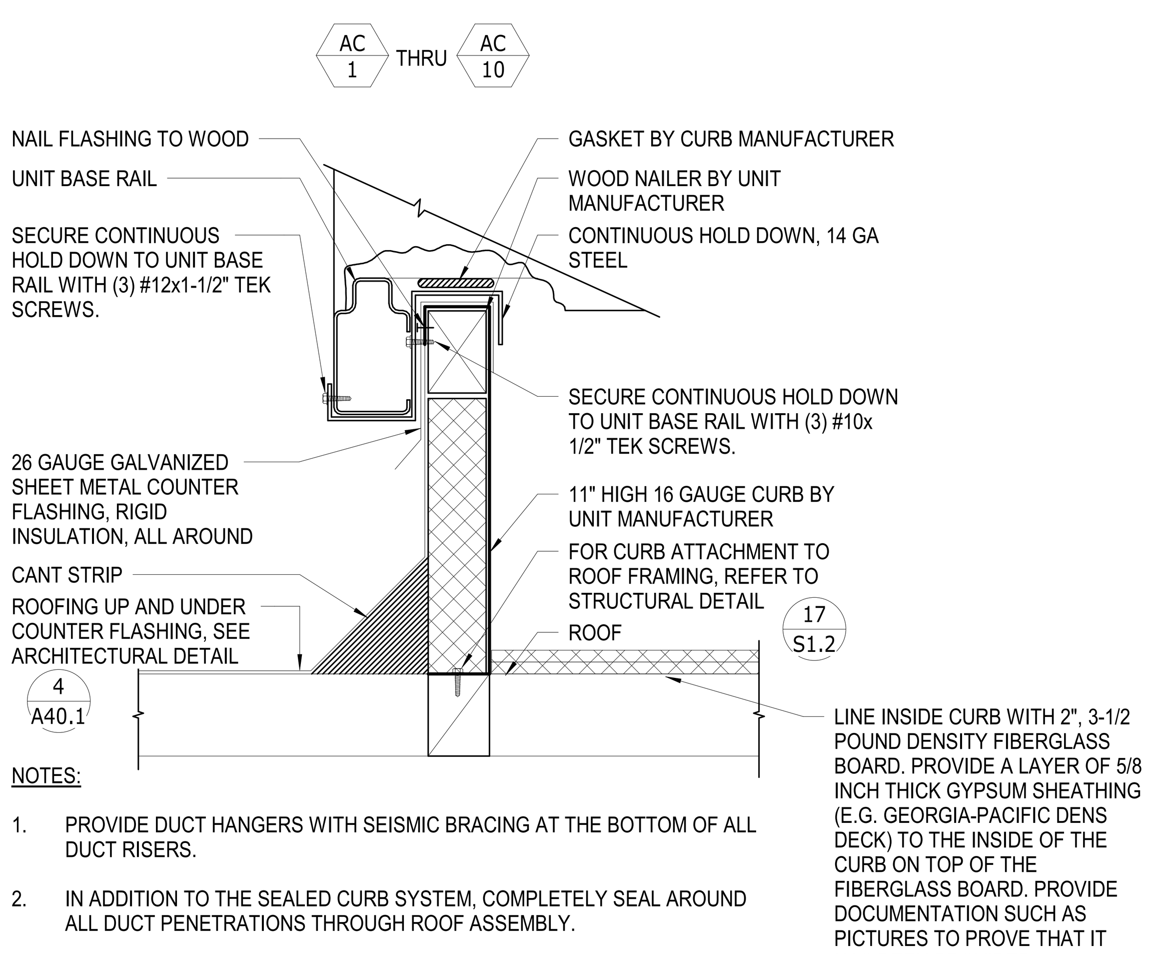

NOTES:

1. PROVIDE DUCT HANGERS WITH SEISMIC BRACING AT THE BOTTOM OF ALL DUCT RISERS.
2. IN ADDITION TO THE SEALED CURB SYSTEM, COMPLETELY SEAL AROUND ALL DUCT PENETRATIONS THROUGH ROOF ASSEMBLY.
3. LAG/WRAP SUPPLY AND RETURN DUCT DROPS THRU ROOF. PROVIDE "KINETICS" KNM-100ALQ OR EQUAL.

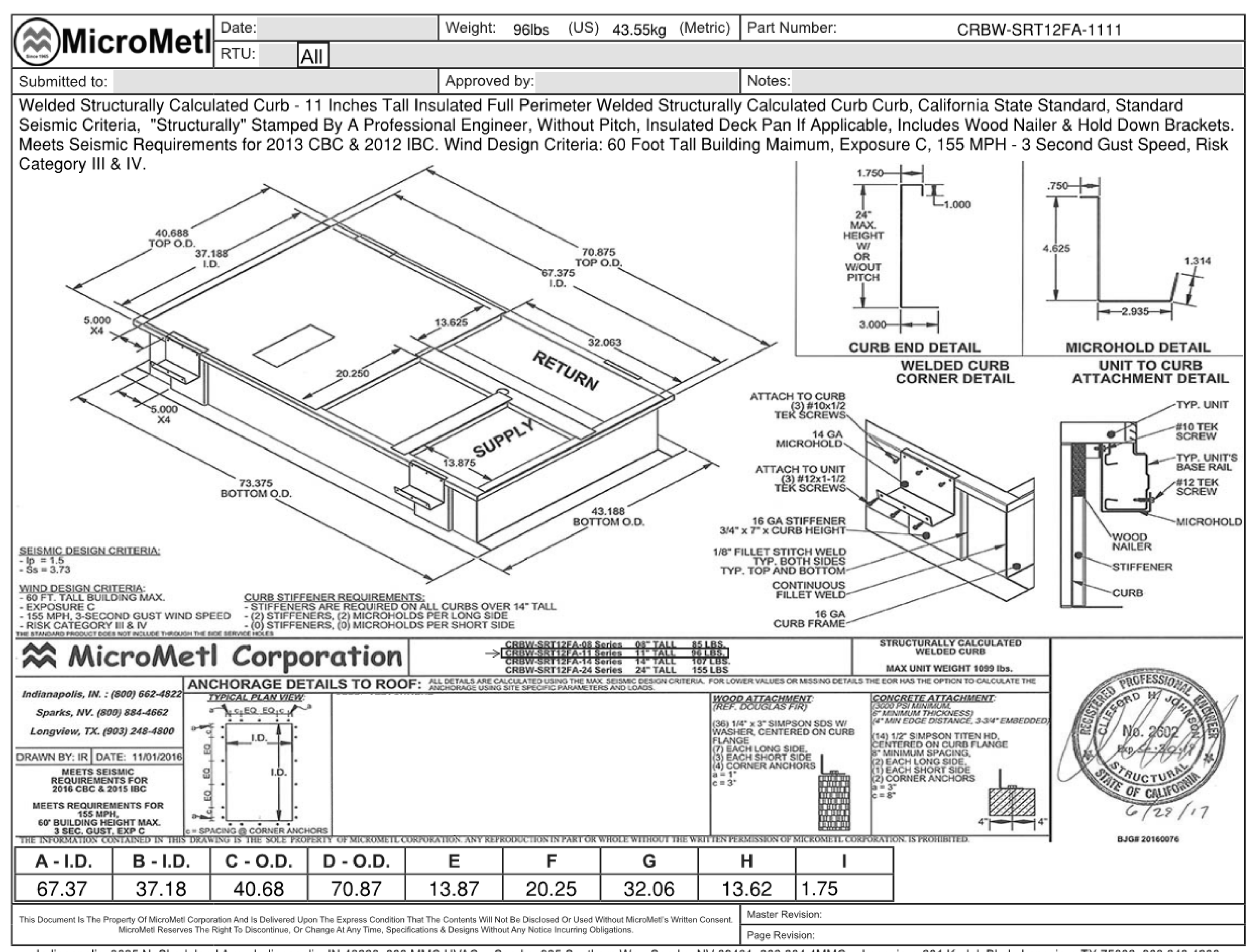

MicroMetl | Date: | Weight: 96lbs (US) 43.55kg (Metric) | Part Number: CRBW-SRT12FA-1111
RTU: All
Submitted to: | Approved by: | Notes:

Welded Structurally Calculated Curb - 11 Inches Tall Insulated Full Perimeter Welded Structurally Calculated Curb Curb, California State Standard, Standard Seismic Criteria, "Structurally" Stamped By A Professional Engineer, Without Pitch, Insulated Deck Pan If Applicable, Includes Wood Nailer & Hold Down Brackets. Meets Seismic Requirements for 2013 CBC & 2012 IBC. Wind Design Criteria: 60 Foot Tall Building Maimum, Exposure C, 155 MPH - 3 Second Gust Speed, Risk Category III & IV.

SEISMIC DESIGN CRITERIA:
- Ip = 1.5
- Ss = 3.73

WIND DESIGN CRITERIA:
- 60 FT. TALL BUILDING MAX.
- EXPOSURE C
- 155 MPH, 3-SECOND GUST WIND SPEED
- RISK CATEGORY III & IV

CURB STIFFENER REQUIREMENTS:
- STIFFENERS ARE REQUIRED ON ALL CURBS OVER 14" TALL
- (2) STIFFENERS, (2) MICROHOLDS PER LONG SIDE
- (0) STIFFENERS, (0) MICROHOLDS PER SHORT SIDE

MicroMetl Corporation

CRBW-SRT12FA-08 Series	08" TALL	85 LBS.
CRBW-SRT12FA-11 Series	11" TALL	96 LBS.
CRBW-SRT12FA-14 Series	14" TALL	107 LBS.
CRBW-SRT12FA-24 Series	24" TALL	155 LBS

STRUCTURALLY CALCULATED WELDED CURB
MAX UNIT WEIGHT 1099 lbs.

Indianapolis, IN. : (800) 662-4822
Sparks, NV. (800) 884-4662
Longview, TX. (903) 248-4800
DRAWN BY: IR | DATE: 11/01/2016
MEETS SEISMIC REQUIREMENTS FOR 2016 CBC & 2015 IBC
MEETS REQUIREMENTS FOR 155 MPH, 60' BUILDING HEIGHT MAX. 3 SEC. GUST, EXP C

ANCHORAGE DETAILS TO ROOF: ALL DETAILS ARE CALCULATED USING THE MAX. SEISMIC DESIGN CRITERIA. FOR LOWER VALUES OR MISSING DETAILS THE EOR HAS THE OPTION TO CALCULATE THE ANCHORAGE USING SITE SPECIFIC PARAMETERS AND LOADS.

TYPICAL PLAN VIEW: c = SPACING @ CORNER ANCHORS

WOOD ATTACHMENT: (REF. DOUGLAS FIR)
(36) 1/4" x 3" SIMPSON SDS W/ WASHER, CENTERED ON CURB FLANGE
(7) EACH LONG SIDE
(3) EACH SHORT SIDE
(4) CORNER ANCHORS
a = 1"
c = 3"

CONCRETE ATTACHMENT: (3000 PSI MINIMUM, 6" MINIMUM THICKNESS) (4" MIN EDGE DISTANCE, 3-3/4" EMBEDDED)
(14) 1/2" SIMPSON TITEN HD, CENTERED ON CURB FLANGE
8" MINIMUM SPACING,
(2) EACH LONG SIDE,
(1) EACH SHORT SIDE
(2) CORNER ANCHORS
a = 3"
c = 8"

BJG# 20160076

THE INFORMATION CONTAINED IN THIS DRAWING IS THE SOLE PROPERTY OF MICROMETL CORPORATION. ANY REPRODUCTION IN PART OR WHOLE WITHOUT THE WRITTEN PERMISSION OF MICROMETL CORPORATION IS PROHIBITED.

A - I.D.	B - I.D.	C - O.D.	D - O.D.	E	F	G	H	I
67.37	37.18	40.68	70.87	13.87	20.25	32.06	13.62	1.75

This Document Is The Property Of MicroMetl Corporation And Is Delivered Upon The Express Condition That The Contents Will Not Be Disclosed Or Used Without MicroMetl's Written Consent. MicroMetl Reserves The Right To Discontinue, Or Change At Any Time, Specifications & Designs Without Any Notice Incurring Obligations.

Master Revision:
Page Revision:

Indianapolis_3035 N. Shadeland Ave., Indianapolis, IN 46226_800.MMC.HVAC •• Sparks_905 Southern Way, Sparks, NV 89431_800.884.4MMC •• Longview_201 Kodak Blvd., Longview, TX 75602_903.248.4800

7/M5.1 AC UNIT MOUNTING DETAIL AND CUT SHEET
SCALE: NTS

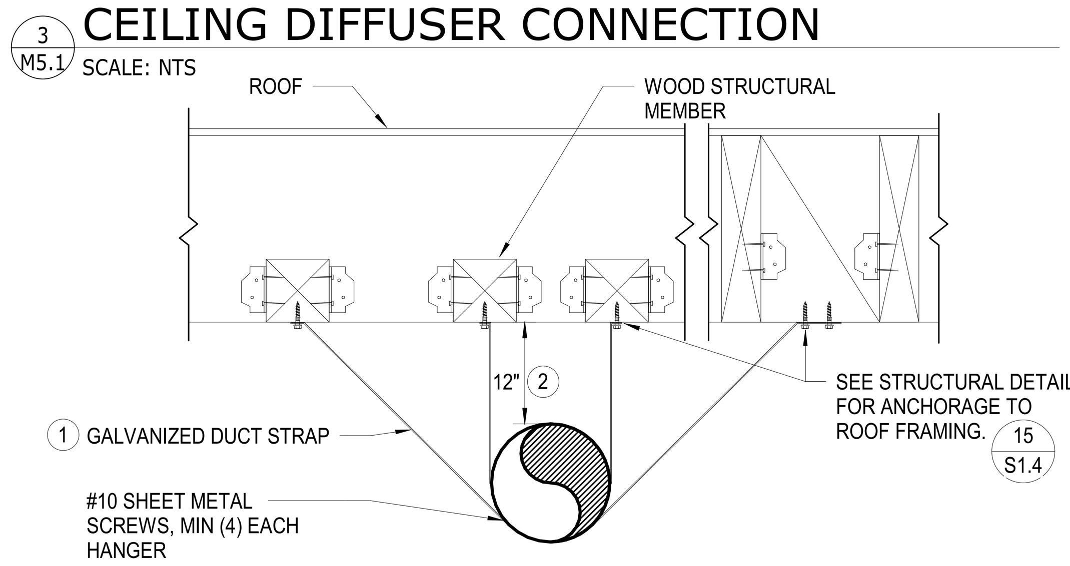

NOTES:

1. 1"X18 GA SHEET METAL HANGER AT MAXIMUM 10 FEET ON CENTER. IN ADDITIION PROVIDE AT THE ELBOWS, TEES, END OF RUNS AND BOTTOM OF RISERS.
2. IF TOP OF DUCT IS MORE THAN 12" FROM ATTACHMENT TO STRUCTURE, PROVIDE 1"X18 GA SHEET METAL VERTICAL AND SEISMIC BRACING. PROVIDE TRANSVERSE BRACING AT MAXIMUM 30 FEET ON CENTER, AND LONGITUDINAL AT 60 FEET ON CENTER. IN ADDITION PROVIDE VERTICAL AND SEISMIC BRACING AT ELBOWS, TEES, END OF RUNS, AND BOTTOM OF RISERS.

4/M5.1 ROUND DUCT SUPPORT
SCALE: NTS

IDENTIFICATION STAMP
DIV. OF THE STATE ARCHITECT
APP. 04-118693 INC:
REVIEWED FOR
SS ☑ FLS ☑ ACS ☑
DATE: 03.13.2020

Date | Revison

PMPE CONSULTANTS MECHANICAL ENGINEERS
5755 Oberlin Drive, Suite #102
San Diego, CA 92121
Tel: (858) 642-0800
Fax: (858) 642-0802
Consultant

REGISTERED PROFESSIONAL ENGINEER MAX PAJOUHESH M27488 EXP.:06/30/21 MECHANICAL STATE OF CALIFORNIA
Engineer

studioWC ARCHITECTURE + ENGINEERING
515 Encinitas Blvd. Ste. 201, Encinitas, California 92024
Telephone: (760)753-6800 Fax: (760)452-7541

LICENSED ARCHITECT ROBERT D. WEBB A.I.A. C-28036 OCTOBER 31, 2021 STATE OF CALIFORNIA

CHET F. HARRITT ELEM. SCHOOL
LRC & CLASSROOM ADDITION
SANTEE SCHOOL DISTRICT

MECHANICAL DETAILS

Drawn: MM
Checked: MP
Date:
Job:

M5.1

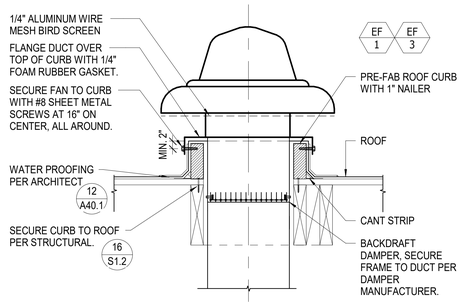

9 M5.2 ROOF EXHAUST FAN

SCALE: NTS

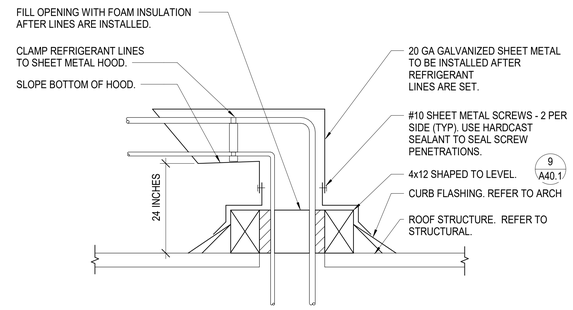

5 M5.2 REFRIGERANT PIPING ROOF PENETRATION

SCALE: NTS

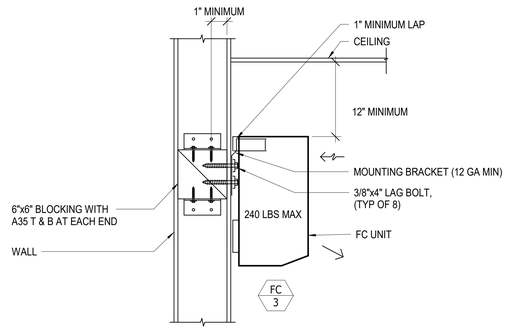

1 M5.2 DUCTLESS FC MOUNTING DETAIL

SCALE: NTS

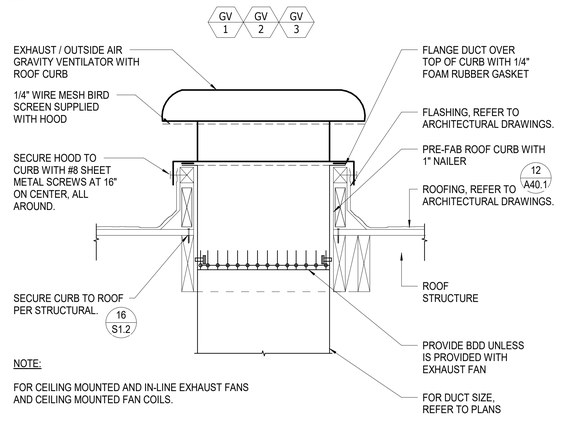

10 M5.2 EXHAUST / OUTSIDE AIR DUCT THRU ROOF

SCALE: NTS

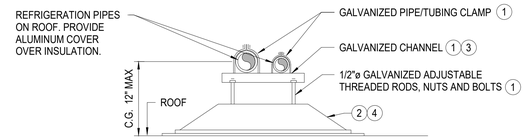

NOTES:

1. UNISTRUT, 12 GA (OR EQUAL). TOUCH UP ALL FIELD CUT WITH ZINC RICH PAINT.
2. SUPPORT ASSEMBLY SHALL BE PHP SYSTEM # PP10-C WITH FLEXCOM DOUBLE SIDED ADHESIVE TAPE. INSTALL PER MANUFACTURER'S GUIDELINES.
3. ADJUSTABLE SUPPORT.
4. PROVIDE SUPPORTS AT 72" ON CENTER FOR REFRIGERANT PIPING.

6 M5.2 ROOF REFRIGERATION PIPE SUPPORT DETAIL

SCALE: NTS

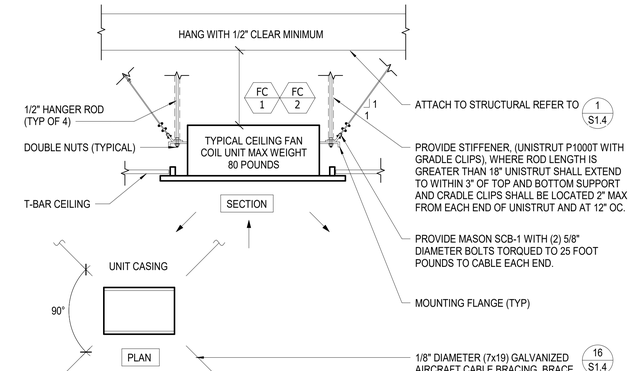

2 M5.2 DUCTLESS FC CEILING MOUNTING DETAIL

SCALE: NTS

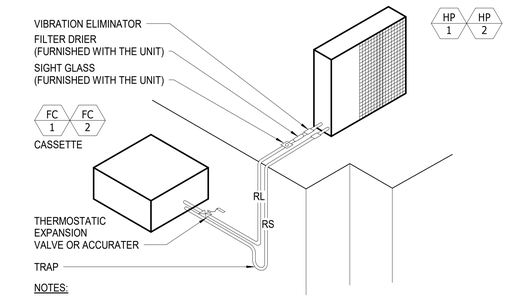

NOTES:

1. CONFIRM REQUIRED REFRIGERANT PIPE SIZES WITH MANUFACTURER FOR THE DISTANCE BETWEEN HP'S AND FC'S. PROVIDE DOCUMENTATION WITH SUBMITTAL.
2. REFRIGERANT PIPE INSULATION R VALUE SHALL COMPLY WITH CALIFORNIA ENERGY STANDARD YEAR 2016, TABLE 120.3-A FOR THE FLUID TEMPERATURE RANGE. THIS REQUIREMENT SUPERSEDES SPECIFICATION.

11 M5.2 REFRIGERATION PIPING FOR HEAT PUMP

SCALE: NTS

GENERAL PIPING SUPPORT PER 2016 CPC TABLE 1210.2.4.1	
NOMINAL SIZE OF TUBING SMOOTH-WALL (INCHES OD)	SPACING OF SUPPORTS (FEET)
1/2	4
5/8 OR 3/4	6
7/8" OR 1 (HORIZONTAL)	8

SPACING BETWEEN SEISMIC BRACING SHALL NOT EXCEED:
TRANVERSE = 40'
LONGITUDINAL = 80'
PROVIDE ADDITIONAL SEISMIC BRACING AT THE END OF EACH RUN AND AT 90 DEGREES ELBOWS.

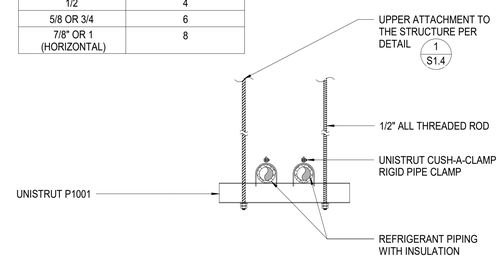

7 M5.2 REFRIGERATION PIPE GRAVITY SUPPORT

SCALE: NTS

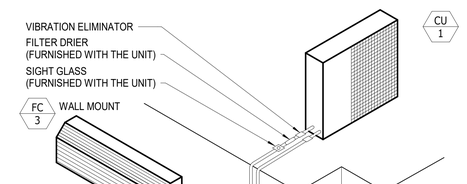

NOTES:

1. CONFIRM REQUIRED REFRIGERANT PIPE SIZES WITH MANUFACTURER FOR THE DISTANCE BETWEEN CU AND FC. PROVIDE DOCUMENTATION WITH SUBMITTAL.
2. REFRIGERANT PIPE INSULATION R VALUE SHALL COMPLY WITH CALIFORNIA ENERGY STANDARD YEAR 2016, TABLE 120.3-A FOR THE FLUID TEMPERATURE RANGE. THIS REQUIREMENT SUPERSEDES SPECIFICATION.

3 M5.2 REFRIGERATION PIPING FOR CONDENSING UNIT

SCALE: NTS

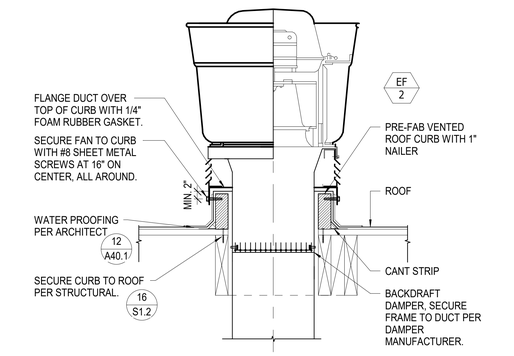

12 M5.2 KILN EXHAUST FAN MOUNTING

SCALE: NTS

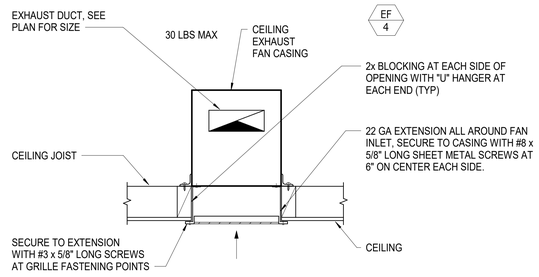

8 M5.2 CEILING EXHAUST FAN MOUNTING

SCALE: NTS

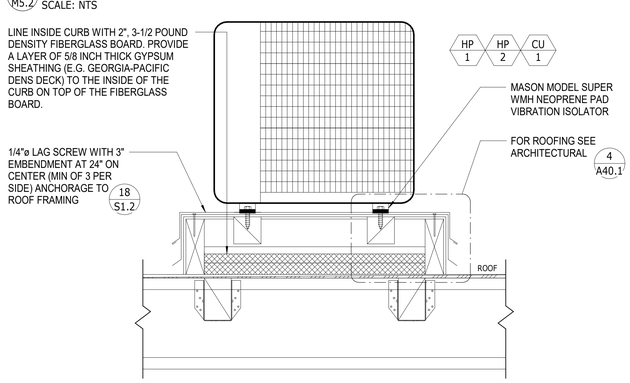

4 M5.2 CONDENSING UNIT MOUNTING

SCALE: NTS

IDENTIFICATION STAMP
DIV. OF THE STATE ARCHITECT
APP. 04-118693 INC:
REVIEWED FOR
SS ☑ FLS ☑ ACS ☑
DATE: 03.13.2020

Revision | Date

PMPE CONSULTANTS MECHANICAL ENGINEERS
5755 Oberlin Drive, Suite #102
San Diego, CA 92121
Tel: (858) 642-0800
Fax: (858) 642-0802
Consultant

REGISTERED PROFESSIONAL ENGINEER
MAX PAJOUHESH
M27488
EXP. 06/30/21
MECHANICAL
STATE OF CALIFORNIA
Engineer

studioWC
ARCHITECTURE + ENGINEERING
515 Encinitas Blvd, Ste 201, Encinitas, California 92024
Telephone: (760) 634-8800 Fax: (760) 452-7341

LICENSED ARCHITECT
ROBERT D. WEBB
C-28036
OCTOBER 31, 2021
STATE OF CALIFORNIA

CHET F. HARRITT ELEM. SCHOOL
LRC & CLASSROOM ADDITION
SANTEE SCHOOL DISTRICT

MECHANICAL DETAILS

Drawn: MM
Checked: MP
Date:
Job:

M5.2

HOOD INFORMATION

HOOD NO.	MARK	MODEL	HOOD DIMENSIONS (IN.)			HOOD CONSTR.	COOKING LOAD / DUTY RATING	TOTAL CFM	EXHAUST					SUPPLY		TOTAL WEIGHT LBS.	SECTION LOCATION
			LENGTH	WIDTH	HEIGHT				COLLAR(S)					MUA CFM	AC CFM		
									WIDTH	LENGTH	DIA.	CFM	S.P.				
1	HOOD#1	XO-60-S	60.00	30	24	4;300 SS 100%	4;0	500	8	8		500	0.152			120	SINGLE

HOOD INFORMATION

HOOD NO.	MARK	LIGHTING DETAILS			BAFFLE FILTRATION DETAILS				UTILITY CABINET(S)				
		FIXTURE TYPE BULB / LAMP INFO	QTY	FOOT CANDLES	TYPE / MODEL MATERIAL	QTY	SIZE (IN.)		LOCATION	FIRE SYSTEM		CONTROLS	
							L	H		TYPE	SIZE	MODEL	INTERFACE
1	HOOD#1												

HOOD OPTIONS

6 IN HIGH CEILING ENCLOSURES - FRONT LEFT RIGHT - FIELD INSTALLED
FACTORY MOUNTED EXHAUST COLLAR(S)
MESH FILTER(S) INCLUDED TO COVER DUCT OPENING(S)

MATERIAL: 300 SERIES SS
100% CONSTRUCTION.
HANGER BRACKETS
GALVANIZED STEEL

1. PROVIDE EXHAUST FAN ON 2/M5.3.
2. INSTALL THIS HOOD ABOVE KILNS. FOR MOUNTING DETAIL REFER TO STRUCTURAL DETAIL. (1/S1.4)

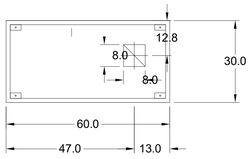

MARK: HOOD#1 - SECTION 1
PLAN VIEW

MARK: HOOD#1 - SECTION 1
ELEVATION VIEW

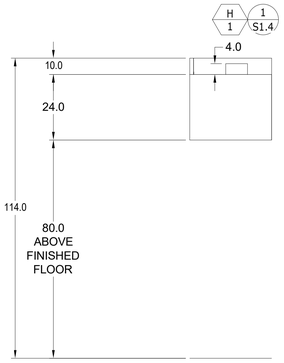

MARK: HOOD#1
SECTION VIEW

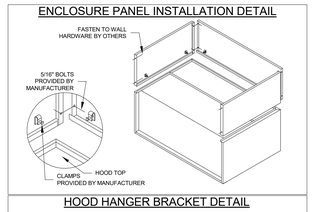

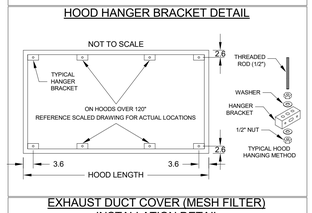

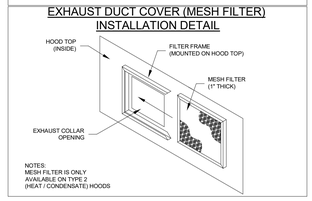

1/M5.3 KILN HOOD DETAILS AND SCHEDULE

SCALE: NTS

Direct Drive Upblast Centrifugal Roof Exhaust Fan

MARK INFORMATION		FAN INFORMATION						MOTOR INFORMATION					
QTY	MARK	MODEL	VOLUME (CFM)	TOTAL EXTERNAL SP (IN WG)	FAN RPM	OPERATING POWER (HP)	WEIGHT (LB.)	SIZE (HP)	V/C/P	ENCLOSURE	MOTOR HP	WINDINGS	FLA
1	EF-2	XRUD-141HP-VG	500	0.75	1,141	0.12	82	0.25	115/60/1	OP	1725	1	3.5

*NEC FLA - Based on tables 150 or 148 of National Electrical Code 2002. Actual motor FLA may vary, for sizing thermal overload, consult factory.

EF-2 : SELECTED OPTIONS AND ACCESSORIES

VENTED ROOF CURB AND BACKDRAFT DAMPER
UL/cUL 705 Listed - "Power Ventilators"
Switch, NEMA-3R, Toggle, Shipped with Unit
Hinged Base (Attached)
Foam Curb Seal (Attached)
Damper Shipped Loose, BD-100-PB-16X16, Gravity Operated, Not Coated
Birdscreen: Galvanized, nom. 65% Free Area

1. PROVIDE EXHAUST FAN WITH HOOD ON THIS DRAWING.
2. INSTALL THIS EXHAUST FAN ON ROOF ABOVE KILN HOOD. FOR MOUNTING DETAIL REFER TO DETAIL 12/M5.2.

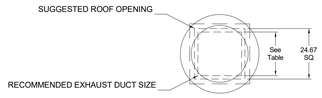

DUCT TYPE	SIZE
STANDARD	16 SQ
FIRE-WRAPPED	8 SQ

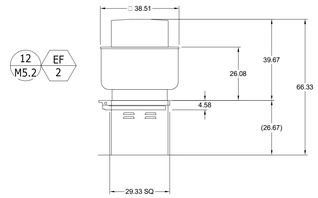

DUCT DIMENSIONS ARE LARGEST POSSIBLE DUCT TO FIT THROUGH CURB. CONSULT SYSTEM DESIGN ENGINEER FOR RECOMMENDED DUCT SIZE.

OVERALL HEIGHT MAY BE GREATER DEPENDING ON MOTOR.

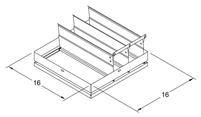

DAMPER

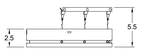

TYP. SECTION VIEW

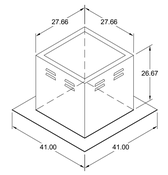

2/M5.3 KILN HOOD EXHAUST FAN DETAILS AND SCHEDULE

SCALE: NTS

IDENTIFICATION STAMP
DIV. OF THE STATE ARCHITECT
APP. 04-118693 INC:
REVIEWED FOR
SS ☑ FLS ☑ ACS ☑
DATE: 03.13.2020

Revison	Date

PMPE CONSULTANTS MECHANICAL ENGINEERS
5755 Oberlin Drive, Suite #102
San Diego, CA 92121
Tel: (858) 642-0800
Fax: (858) 642-0802
Consultant

REGISTERED PROFESSIONAL ENGINEER
MAX PAJOHEM
M27488
EXP. 06/30/21
MECHANICAL
STATE OF CALIFORNIA
Engineer

studioWC
ARCHITECTURE + ENGINEERING
515 Encinitas Blvd, Ste 201, Encinitas, California 92024
Telephone: (760) 634-8880 Fax: (760) 452-7341

LICENSED ARCHITECT
ROBERT D. WEBB JR.
C-28036
OCTOBER 31, 2021
STATE OF CALIFORNIA

CHET HARRITT REV.1

EF-1

PROJECT 1/22/2020

MARK

ACCUREX SOUTHERN CA HAWAII
9; AMEER TILLMAN
AMEER.TILLMAN@ACCUREX.COM 9;
(509)430-5326

ACCUREX

CHET F. HARRITT ELEM. SCHOOL
LRC & CLASSROOM ADDITION
SANTEE SCHOOL DISTRICT

KILN DETAILS AND SCHEDULE

Drawn: MM
Checked: MP
Date:
Job:

M5.3

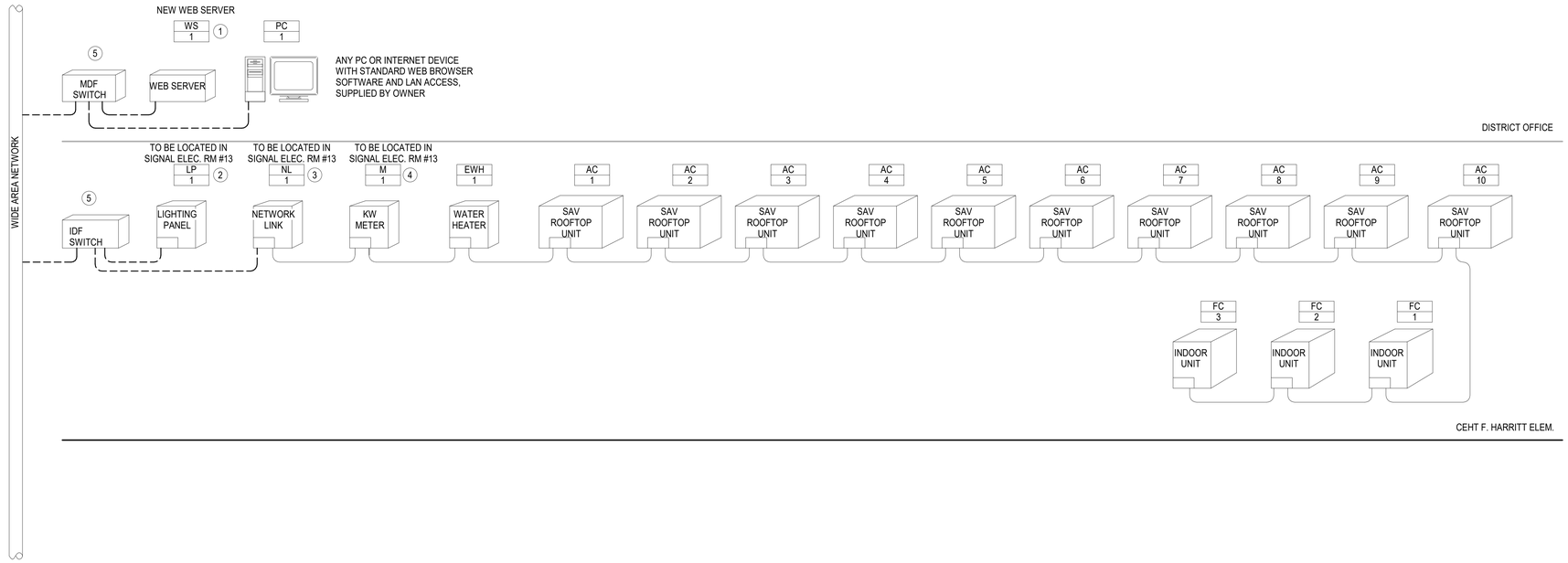

WIRE LEGEND

LOCAL AREA NETWORK (CAT 5) PROVIDED AND INSTALLED BY OTHERS

BACNET ARCNET NETWORK WIRING, PART NUMBER "0042002-S", 24 AWG 2 COND SHIELDED

KEY NOTES

1. SOFTWARE TO INCLUDE ADR SIGNAL SOFTWARE TO RECEIVE SIGNAL FROM LOCAL UTILITY.
2. LIGHTING PANEL FURNISHED AND INSTALLED BY ELECTRICAL CONTRACTOR.
3. POWER FOR NETWORK LINK FURNISHED AND INSTALLED BY THE ELECTRICAL CONTRACTOR.
4. ELECTRICAL METER TO BE FURNISHED BY THE CONTROLS CONTRACTOR AND INSTALLED BY THE ELECTRICAL CONTRACTOR.
5. MDF/ IDF SWITCH PROVIDED BY OWNER.

GENERAL NOTES

1. EMCS RISER DIAGRAM SHOWS TYPICAL UNITS
2. CONFIRM THE ORDER OF AC UNITS WITH ROOF PLANS, SEE SHEETS

OVERALL CONTROL DIAGRAM | NTS | 1

IDENTIFICATION STAMP
DIV. OF THE STATE ARCHITECT
APP. 04-118693 INC:
REVIEWED FOR
SS ☑ FLS ☑ ACS ☑
DATE: 03.13.2020

Revision | Date

PMPE CONSULTANTS MECHANICAL ENGINEERS
5755 Oberlin Drive, Suite #102
San Diego, CA 92121
Tel: (858) 642-09800
Fax: (858) 642-0802
Consultant

REGISTERED PROFESSIONAL ENGINEER
MAX PAJOUHESH
M27488
EXP. 06/30/21
MECHANICAL
STATE OF CALIFORNIA
Engineer

studioWC
ARCHITECTURE + ENGINEERING
515 Encinitas Blvd, Ste 201, Encinitas, California 92024
Telephone: (760) 634-8800 Fax: (760) 452-7341

LICENSED ARCHITECT
ROBERT D. WEBB
C-28036
OCTOBER 31, 2021
STATE OF CALIFORNIA

CHET F. HARRITT ELEM. SCHOOL
LRC & CLASSROOM ADDITION
SANTEE SCHOOL DISTRICT

OVERALL CONTROL DIAGRAM

Drawn: MM
Checked: MP
Date:
Job:

M6.1

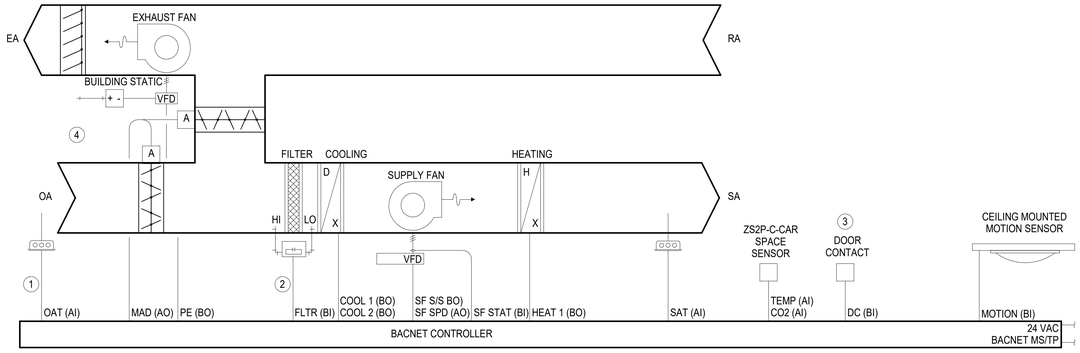

	Hardware Points				Software Points						
Point Name	**AI**	**AO**	**BI**	**BO**	**AV**	**BV**	**Loop**	**Sched**	**Trend**	**Alarm**	**Show On Graphic**
Space Temp					x				x	x	x
Space Setpoint Adjust					x				x		x
Space Unoccupied Override					x				x		
Space CO2 PPM					x				x	x	x
Supply Air Temp	x								x	x	x
Mixed Air Dampers		x							x	x	x
Supply Fan Status (Current Switch)			x						x	x	x
Filter Status Switch			x						x	x	x
Occupancy Contact			x						x		x
Door Contact			x						x		x
Cooling Stage 1				x					x		x
Cooling Stage 2				x					x		x
Heating Stage 1				x					x		x
Powered Exhaust Enable/Disable				x					x		
Supply Fan Start/Stop				x					x		x
Outside Air Temp	x					x			x		x
Schedule								x	x		
Cooling Setpoint									x		x
Heating Setpoint									x		x
Compressor Runtime Exceeded										x	
KW Demand Limit					x				x		x

SEQUENCE OF OPERATION

OCCUPANCY
THE UNIT WILL FOLLOW A USER DEFINED BACNET SCHEDULE CONFIGURED FROM THE SERVER.

UNOCCUPIED MODE
THE UNIT WILL MAINTAIN AN UNOCCUPIED COOLING SETPOINT OF 95°F AND AN UNOCCUPIED HEATING SETPOINT OF 45°F. DURING THE UNOCCUPIED TIME, EACH PRESS OF THE OVERRIDE BUTTON LOCATED ON THE ROOM SPACE SENSOR WILL ADD 30 MINS (ADJ.) OF OCCUPIED TIME FOR UP TO 4 HOURS (ADJ.). AFTER THE TIME HAS EXPIRED THE UNIT WILL RETURN TO THE UNOCCUPIED MODE.

INDOOR FAN - 2 SPEED: DURING OCCUPIED PERIODS, THE FAN SHALL OPERATE CONTINUOUSLY. DURING UNOCCUPIED PERIODS, THE FAN SHALL OPERATE WHEN THE SPACE TEMPERATURE EXCEEDS THE UNOCCUPIED HEATING OR COOLING SETPOINTS. THE FAN OPERATES AT 1 OF 2 SPEEDS DEPENDING ON THE MODE OF OPERATION AND LOAD CONDITIONS. DURING VENT ONLY MODE AND LOW LOAD CONDITIONS, THE FAN OPERATES AT LOW SPEED. IF LOAD CONDITIONS INCREASE OR IF THERE IS A CALL FOR HEATING, THE FAN OPERATES AT HIGH SPEED. FAN SPEED IS NOT CONTROLLED TO MAINTAIN DUCT STATIC PRESSURE.

HEATING MODE
WHEN SPACE TEMPERATURE IS BELOW THE OCCUPIED HEATING SETPOINT OF 68°F (ADJ.), UNIT SHALL OPERATE IN THE HEATING MODE. UNIT SHALL STAGE AVAILABLE HEAT STAGES TO SATISFY DEMAND IN THE OCCUPIED SPACE. EACH STAGE OF HEATING HAS A FIXED 1 MINUTE MINIMUM ON-TIME, AND 1 MINUTE OFF TIME

COOLING MODE
WHEN SPACE TEMPERATURE IS ABOVE OCCUPIED COOLING SETPOINT OF 76°F (ADJ.), UNIT SHALL OPERATE IN THE COOLING MODE. UNIT SHALL ENABLE AVAILABLE MECHANICAL COOLING STAGES TO SATISFY DEMAND IN THE OCCUPIED SPACE. EACH COMPRESSOR OUTPUT HAS A FIXED 3 MINUTE MINIMUM ON-TIME, AND 5 MINUTE OFF TIME

DOOR SWITCH INTERLOCK
UPON OPENING ANY EXTERIOR DOOR FOR A DURATION OF 5 MINUTES (ADJ.). THE MECHANICAL HEATING AND COOLING WILL BE DISABLED. ECONOMIZER COOLING, IF AVAILABLE, WILL CONTINUE TO OPERATE.

ECONOMIZER
ECONOMIZER SHALL CLOSE WHEN FAN IS OFF OR DURING A LOSS OF POWER. DURING OCCUPIED HOURS WHEN FAN IS ENERGIZED IN LOW SPEED THE ECONOMIZER SHALL OPEN TO ITS LOW FAN MINIMUM POSITION OF 33% (ADJ.). WHEN THE FAN IS RUNNING IN HIGH SPEED THE ECONOMIZER SHALL RESET TO ITS HIGH SPEED MINIMUM POSITION OF 20% (ADJ.). DAMPER MINIMUM POSITIONS TO BE DETERMINED BY AIR BALANCER.

WHEN OUTSIDE AIR TEMPERATURE IS BELOW THE HIGH LIMIT OF 71°F (ADJ.), BELOW SPACE TEMPERATURE, AND OCCUPIED SPACE REQUIRES COOLING, ECONOMIZER SHALL OPEN. IF ECONOMIZER AIR IS NOT SUFFICIENT TO MEET THE DEMAND IN THE OCCUPIED SPACE, UNIT SHALL ENABLE AVAILABLE COOLING STAGES TO SATISFY DEMAND IN THE OCCUPIED SPACE.
THE FOLLOWING FAULT DETECTION AND DIAGNOSTIC (FDD) ALARMS SHALL BE SENT THROUGH THE SERVER
A. AIR TEMPERATURE SENSOR FAILURE
B. FAILS TO CLOSE
C. FAILS TO OPEN
D. STUCK FULLY OPEN
E. FAILS TO FULLY OPEN

CO2 CONTROL - DEMAND CONTROLLED VENTILATION
UNIT SHALL MONITOR SPACE CO2 WHEN THE SUPPLY FAN IS ENERGIZED. WHEN THE SPACE CO2 PPM EXCEEDS THE SETPOINT OF 650 PPM (ADJ.) ABOVE OUTDOOR CO2 LEVEL, THE OUTDOOR AIR DAMPER SHALL MODULATE OPEN TOWARDS A MAXIMUM CO2 POSITION OF 50% (ADJ.). IF NO OUTDOOR AIR CO2 SENSOR IS PRESENT, A VALUE OF 400 PPM IS USED. DAMPER POSITION SETPOINTS TO BE DETERMINED BY AIR BALANCER.

POWER EXHAUST
THE EXHAUST FAN SHALL BE ENABLED ANYTIME THE SUPPLY FAN IS RUNNING AND THE OUTDOOR AIR DAMPER OPENS MORE THAN 30% (ADJUSTABLE). THE POWER EXHAUST VFD WILL MODULATE BASED ON ITS OWN CONTROLS TO MAINTAIN THE ROOM PRESSURE SETPOINT (AS DETERMINED BY AIR BALANCER). PRESSURE SETPOINT AND VFD SPEED NOT CONTROLLED THROUGH EMS.

FILTER STATUS
WHEN THE PRESSURE ACROSS THE FILTER BANK EXCEEDS THE SETPOINT OF THE DIFFERENTIAL PRESSURE SWITCH, AN ALARM INDICATES A DIRTY FILTER

DEMAND LIMITING
THE RTU OPEN MAY EMPLOY A DEMAND LIMIT STRATEGY. DEMAND LIMITING IN THE RTU OPEN WORKS THOUGH SETPOINT EXPANSION. THE CONTROLLER'S HEATING AND COOLING SETPOINT ARE EXPANDED IN STEPS OR LEVELS. THE DEGREE TO WHICH THE SETPOINT ARE EXPANDED IS DEFINED BY THE DEMAND LEVEL SETPOINT. EACH DEMAND LEVEL (1 THROUGH 3) ADJUST THE HEATING AND COOLING SETPOINT OUTWARDS. BY DEFAULT, DEMAND 1 YIELDS A 1°F EXPANSION, DEMAND 2 YIELDS A 2°F EXPANSION, AND DEMAND 3 YIELDS A 4°F EXPANSION. THE BACNET DEMAND LIMITING VARIABLE SETS THE ADJUSTABLE DESIRED LEVEL OF SETPOINT EXPANSION IN THE RECEIVING CONTROLLER. LEVEL 0 LEAVES THE STANDARD OCCUPIED AND UNOCCUPIED HEATING AND COOLING SETPOINT IN EFFECT. LEVEL 1 THOUGH 3 EXPANDS OCCUPIED HEATING AND COOLING SETPOINT. THE DEMAND LIMIT KW SETPOINTS ARE SET IN THE KW METER CONTROL PROGRAM AND DETERMINED BY THE DISTRICT.

KEY NOTES

1. PROVIDE ONE OUTDOOR AIR TEMPERATURE SENSOR FOR THIS PROJECT.
2. PROVIDE A DIFFERENTIAL PRESSURE SENSOR FOR TWO OF THE AC UNITS.
3. ALL OPERABLE WINDOWS OPENING TO OUTSIDE, AND ALL DOORS OPENING TO OUTSIDE SHALL BE EQUIPPED WITH SENSOR TO SHUT-DOWN THE AC UNIT AFTER 5 MINUTES. REFER TO ARCHITECTURAL DRAWINGS FOR LOCATIONS AND QUANTITY.
4. PROVIDE ONE SPACE PRESSURE SENSOR PER AC UNIT.

GENERAL NOTES

1. INCLUDED IN SCOPE OF WORK IS TO WORK WITH AND ASSIST MECHANICAL AND TAB CONTRACTORS, AS WELL AS COMMISSIONING AGENTS DURING SYSTEMS TESTING, BALANCING, AND COMMISSIONING.

PACKAGED ROOFTOP UNIT CONTROL DIAGRAM (TYPICAL FOR AC-1 THRU AC-6, AC-9, AND AC-10) | NTS | 1

IDENTIFICATION STAMP
DIV. OF THE STATE ARCHITECT
APP. 04-118693 INC:
REVIEWED FOR
SS ☑ FLS ☑ ACS ☑
DATE: 03.13.2020

Revison | Date

PMPE CONSULTANTS MECHANICAL ENGINEERS
5755 Oberlin Drive, Suite #102
San Diego, CA 92121
Tel: (858) 642-0800
Fax: (858) 642-0802
Consultant

REGISTERED PROFESSIONAL ENGINEER
MAX PAJOOHEYA
M27488
EXP. 06/30/21
MECHANICAL
STATE OF CALIFORNIA
Engineer

studioWC
ARCHITECTURE + ENGINEERING
515 Encinitas Blvd, Ste 201, Encinitas, California 92024
Telephone: (760) 634-8800 Fax: (760)452-7341

LICENSED ARCHITECT
ROBERT D. WEBB IV.
C-28036
OCTOBER 31, 2021
STATE OF CALIFORNIA

CHET F. HARRITT ELEM. SCHOOL
LRC & CLASSROOM ADDITION
SANTEE SCHOOL DISTRICT

PACKAGE UNIT CONTROL DIAGRAM

Drawn: MM
Checked: MP
Date:
Job:

M6.2

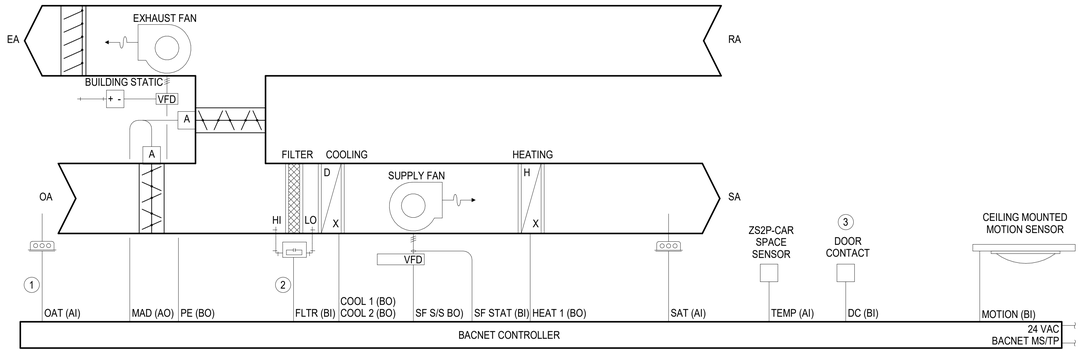

	Hardware Points				Software Points						
Point Name	AI	AO	BI	BO	AV	BV	Loop	Sched	Trend	Alarm	Show On Graphic
Space Temp					x				x	x	x
Space Setpoint Adjust					x				x		x
Space Unoccupied Override					x				x		
Supply Air Temp	x								x	x	x
Mixed Air Dampers		x							x	x	x
Supply Fan Status (Current Switch)			x						x	x	x
Filter Status Switch			x						x	x	x
Occupancy Contact			x						x		x
Door Contact			x						x		x
Cooling Stage 1				x					x		x
Cooling Stage 2				x					x		x
Heating Stage 1				x					x		x
Powered Exhaust Enable/Disable				x					x		
Supply Fan Start/Stop				x					x		x
Outside Air Temp	x					x			x		x
Schedule								x	x		
Cooling Setpoint									x		x
Heating Setpoint									x		x
Compressor Runtime Exceeded										x	
KW Demand Limit					x				x		x

SEQUENCE OF OPERATION

OCCUPANCY
THE UNIT WILL FOLLOW A USER DEFINED BACNET SCHEDULE CONFIGURED FROM THE SERVER.

UNOCCUPIED MODE
THE UNIT WILL MAINTAIN AN UNOCCUPIED COOLING SETPOINT OF 95°F AND AN UNOCCUPIED HEATING SETPOINT OF 45°F. DURING THE UNOCCUPIED TIME, EACH PRESS OF THE OVERRIDE BUTTON LOCATED ON THE ROOM SPACE SENSOR WILL ADD 30 MINS (ADJ.) OF OCCUPIED TIME FOR UP TO 4 HOURS (ADJ.), AFTER THE TIME HAS EXPIRED THE UNIT WILL RETURN TO THE UNOCCUPIED MODE.

INDOOR FAN - 2 SPEED: DURING OCCUPIED PERIODS, THE FAN SHALL OPERATE CONTINUOUSLY. DURING UNOCCUPIED PERIODS, THE FAN SHALL OPERATE WHEN THE SPACE TEMPERATURE EXCEEDS THE UNOCCUPIED HEATING OR COOLING SETPOINTS. THE FAN OPERATES AT 1 OF 2 SPEEDS DEPENDING ON THE MODE OF OPERATION AND LOAD CONDITIONS. DURING VENT ONLY MODE AND LOW LOAD CONDITIONS, THE FAN OPERATES AT LOW SPEED. IF LOAD CONDITIONS INCREASE OR IF THERE IS A CALL FOR HEATING, THE FAN OPERATES AT HIGH SPEED. FAN SPEED IS NOT CONTROLLED TO MAINTAIN DUCT STATIC PRESSURE.

HEATING MODE
WHEN SPACE TEMPERATURE IS BELOW THE OCCUPIED HEATING SETPOINT OF 68°F (ADJ.), UNIT SHALL OPERATE IN THE HEATING MODE. UNIT SHALL STAGE AVAILABLE HEAT STAGES TO SATISFY DEMAND IN THE OCCUPIED SPACE. EACH STAGE OF HEATING HAS A FIXED 1 MINUTE MINIMUM ON-TIME, AND 1 MINUTE OFF TIME

COOLING MODE
WHEN SPACE TEMPERATURE IS ABOVE OCCUPIED COOLING SETPOINT OF 76°F (ADJ.), UNIT SHALL OPERATE IN THE COOLING MODE. UNIT SHALL ENABLE AVAILABLE MECHANICAL COOLING STAGES TO SATISFY DEMAND IN THE OCCUPIED SPACE. EACH COMPRESSOR OUTPUT HAS A FIXED 3 MINUTE MINIMUM ON-TIME, AND 5 MINUTE OFF TIME

DOOR SWITCH INTERLOCK
UPON OPENING ANY EXTERIOR DOOR FOR A DURATION OF 5 MINUTES (ADJ.). THE MECHANICAL HEATING AND COOLING WILL BE DISABLED. ECONOMIZER COOLING, IF AVAILABLE, WILL CONTINUE TO OPERATE.

ECONOMIZER
ECONOMIZER SHALL CLOSE WHEN FAN IS OFF OR DURING A LOSS OF POWER. DURING OCCUPIED HOURS WHEN FAN IS ENERGIZED IN LOW SPEED THE ECONOMIZER SHALL OPEN TO ITS LOW FAN MINIMUM POSITION OF 33% (ADJ.). WHEN THE FAN IS RUNNING IN HIGH SPEED THE ECONOMIZER SHALL RESET TO ITS HIGH SPEED MINIMUM POSITION OF 20% (ADJ.). DAMPER MINIMUM POSITIONS TO BE DETERMINED BY AIR BALANCER.

WHEN OUTSIDE AIR TEMPERATURE IS BELOW THE HIGH LIMIT OF 71°F (ADJ.), BELOW SPACE TEMPERATURE, AND OCCUPIED SPACE REQUIRES COOLING, ECONOMIZER SHALL OPEN. IF ECONOMIZER AIR IS NOT SUFFICIENT TO MEET THE DEMAND IN THE OCCUPIED SPACE, UNIT SHALL ENABLE AVAILABLE COOLING STAGES TO SATISFY DEMAND IN THE OCCUPIED SPACE.
THE FOLLOWING FAULT DETECTION AND DIAGNOSTIC (FDD) ALARMS SHALL BE SENT THROUGH THE I-VU SERVER

A. AIR TEMPERATURE SENSOR FAILURE
B. FAILS TO CLOSE
C. FAILS TO OPEN
D. STUCK FULLY OPEN
E. FAILS TO FULLY OPEN

POWER EXHAUST
THE EXHAUST FAN SHALL BE ENABLED ANYTIME THE SUPPLY FAN IS RUNNING AND THE OUTDOOR AIR DAMPER OPENS MORE THAN 30% (ADJUSTABLE). THE POWER EXHAUST VFD WILL MODULATE BASED ON ITS OWN CONTROLS TO MAINTAIN THE ROOM PRESSURE SETPOINT (AS DETERMINED BY AIR BALANCER). PRESSURE SETPOINT AND VFD SPEED NOT CONTROLLED THROUGH EMS.

FILTER STATUS
WHEN THE PRESSURE ACROSS THE FILTER BANK EXCEEDS THE SETPOINT OF THE DIFFERENTIAL PRESSURE SWITCH, AN ALARM INDICATES A DIRTY FILTER

DEMAND LIMITING
THE RTU OPEN MAY EMPLOY A DEMAND LIMIT STRATEGY. DEMAND LIMITING IN THE RTU OPEN WORKS THOUGH SETPOINT EXPANSION. THE CONTROLLER'S HEATING AND COOLING SETPOINT ARE EXPANDED IN STEPS OR LEVELS. THE DEGREE TO WHICH THE SETPOINT ARE EXPANDED IS DEFINED BY THE DEMAND LEVEL SETPOINT. EACH DEMAND LEVEL (1 THROUGH 3) ADJUST THE HEATING AND COOLING SETPOINT OUTWARDS. BY DEFAULT, DEMAND 1 YIELDS A 1°F EXPANSION, DEMAND 2 YIELDS A 2°F EXPANSION, AND DEMAND 3 YIELDS A 4°F EXPANSION. THE BACNET DEMAND LIMITING VARIABLE SETS THE ADJUSTABLE DESIRED LEVEL OF SETPOINT EXPANSION IN THE RECEIVING CONTROLLER. LEVEL 0 LEAVES THE STANDARD OCCUPIED AND UNOCCUPIED HEATING AND COOLING SETPOINT IN EFFECT. LEVEL 1 THOUGH 3 EXPANDS OCCUPIED HEATING AND COOLING SETPOINT. THE DEMAND LIMIT KW SETPOINTS ARE SET IN THE KW METER CONTROL PROGRAM AND DETERMINED BY THE DISTRICT.

KEY NOTES

1. PROVIDE ONE OUTDOOR AIR TEMPERATURE SENSOR FOR THIS PROJECT.
2. PROVIDE A DIFFERENTIAL PRESSURE SENSOR FOR TWO OF THE AC UNITS.
3. ALL OPERABLE WINDOWS OPENING TO OUTSIDE, AND ALL DOORS OPENING TO OUTSIDE SHALL BE EQUIPPED WITH SENSOR TO SHUT-DOWN THE AC UNIT AFTER 5 MINUTES. REFER TO ARCHITECTURAL DRAWINGS FOR LOCATIONS AND QUANTITY.
4. PROVIDE ONE SPACE PRESSURE SENSOR PER AC UNIT.

GENERAL NOTES

1. INCLUDED IN SCOPE OF WORK IS TO WORK WITH AND ASSIST MECHANICAL AND TAB CONTRACTORS, AS WELL AS COMMISSIONING AGENTS DURING SYSTEMS TESTING, BALANCING, AND COMMISSIONING.

PACKAGED ROOFTOP UNIT CONTROL DIAGRAM (TYPICAL FOR AC-7 AND AC-8) | NTS | 1

IDENTIFICATION STAMP
DIV. OF THE STATE ARCHITECT
APP. 04-118693 INC:
REVIEWED FOR
SS ☑ FLS ☑ ACS ☑
DATE: 03.13.2020

Revison	Date

PMPE CONSULTANTS MECHANICAL ENGINEERS
5755 Oberlin Drive, Suite #102
San Diego, CA 92121
Tel: (858) 642-0900
Fax: (858) 642-0902
Consultant

REGISTERED PROFESSIONAL ENGINEER
MAX PAJOUHESH
M27488
EXP. 06/30/21
MECHANICAL
STATE OF CALIFORNIA
Engineer

studioWC
ARCHITECTURE + ENGINEERING
515 Encinitas Blvd, Ste 201, Encinitas, California 92024
Telephone: (760) 634-8800 Fax: (760) 452-7341

LICENSED ARCHITECT
ROBERT D. WEBB JR.
C-28036
OCTOBER 31, 2021
STATE OF CALIFORNIA

CHET F. HARRITT ELEM. SCHOOL
LRC & CLASSROOM ADDITION
SANTEE SCHOOL DISTRICT

PACKAGE UNIT CONTROL DIAGRAM

Drawn: MM
Checked: MP
Date:
Job:

M6.3

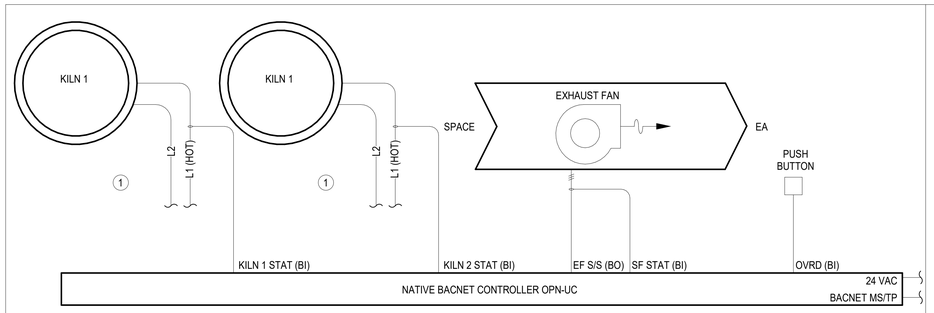

SEQUENCE OF OPERATION

RUN CONDITIONS
EQUIPMENT INTERLOCK - 2 KILNS
THE CONTROLLER WILL MONITOR THE STATUS FOR EACH KILN WITH A CURRENT SWITCH AND THE EXHAUST FAN WILL RUN ANYTIME AT LEAST (1) KILN IS ENABLED. THE EXHAUST FAN WILL CONTINUE TO RUN FOR 10 MIN. (ADJ.) AFTER THE LAST KILN HAS BEEN DISABLED.
OR
MANUAL PUSH BUTTON OVERRIDE:
THE EXHAUST FAN WILL RUN FOR A DURATION OF 1 HOUR (ADJ.) WHEN THE MANUAL PUSH BUTTON IS PRESSED. AFTER THE OVERRID TIME EXPIRES THE EXHAUST FAN WILL STOP.

ALARM:
EXHAUST FAN STATUS WILL BE MONITORED THROUGH A CURRENT SENSING SWITCH. IF THE CURRENT SWITCH STATE DOES NOT MATCH THE COMMANDED STATE AN ALARM WILL BE GENERATED TO THE WEB SERVER.

	Hardware Points				Software Points						
Point Name	**AI**	**AO**	**BI**	**BO**	**AV**	**BV**	**Loop**	**Sched**	**Trend**	**Alarm**	**Show On Graphic**
Exhaust Fan Status (Current Switch)			x						x		x
Kiln #1 Status (Current Switch)			x						x		x
Kiln #2 Status (Current Switch)			x						x		x
Exhaust Fan Start/Stop				x					x		x
Push Button Override			x						x		x
Exhaust Fan Failure										x	
Exhaust Fan in Hand										x	
Exhaust Fan Runtime Exceeded										x	

SCHEDULED EXHAUST FAN CONTROL DETAIL - EF-2 (CONTROL PANEL CP-1) | NTS | 4

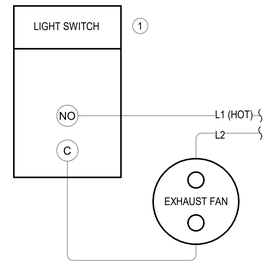

LIGHT SWITCH EXHAUST FAN DETAIL (EF-1 & EF-3) | NTS | 1

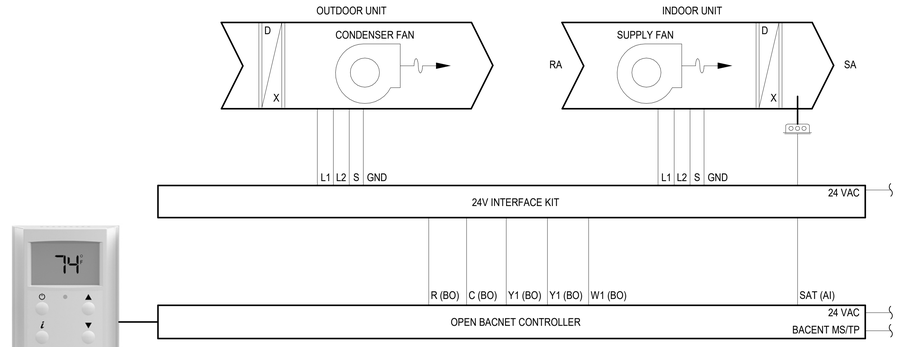

SPACE SENSOR

SEQUENCE OF OPERATION

INDOOR FAN
DURING OCCUPIED PERIODS, FAN SHALL OPERATE CONTINUOUSLY. DURING UNOCCUPIED PERIODS, FAN SHALL OPERATE WHEN THE SPACE TEMPERATURE EXCEEDS THE UNOCCUPIED HEATING OR COOLING SETPOINTS. THE FAN OPERATES AT ONE SPEED ONLY AND PROVIDES ON/OFF OPERATION

HEATING MODE
WHEN SPACE TEMPERATURE IS BELOW THE OCCUPIED HEATING SETPOINT OF 68°F (ADJ.), UNIT SHALL OPERATE IN THE HEATING MODE. UNIT SHALL STAGE AVAILABLE HEAT STAGES TO SATISFY DEMAND IN THE OCCUPIED SPACE. EACH STAGE OF HEATING HAS A FIXED 1 MINUTE MINIMUM ON-TIME, AND 1 MINUTE OFF TIME

COOLING MODE
WHEN SPACE TEMPERATURE IS ABOVE OCCUPIED COOLING SETPOINT OF 76°F (ADJ.), UNIT SHALL OPERATE IN THE COOLING MODE. UNIT SHALL ENABLE AVAILABLE MECHANICAL COOLING STAGES TO SATISFY DEMAND IN THE OCCUPIED SPACE. EACH COMPRESSOR OUTPUT HAS A FIXED 3 MINUTE MINIMUM ON-TIME, AND 5 MINUTE OFF TIME

DUCTLESS SPLIT UNIT DETAIL (FC/CU-1 THRU FC/CU-3) | NTS | 5

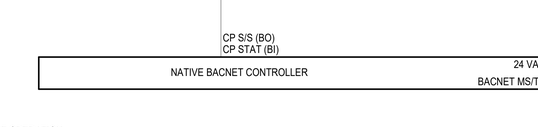

SEQUENCE OF OPERATION

CIRCULATING PUMP
CP-1 SHALL USER DEFINED BACNET SCHEDULE CONFIGURED FROM THE I-VU SERVER CIRCULATING PUMP STATUS WILL BE MONITORED THROUGH A CURRENT SENSING SWITCH. IF THE CURRENT SWITCH DOES NOT DETECT PUMP STATUS AFTER A START COMMAND HAS BEEN SENT TO THE ASSOCIATED PUMP, AN ALARM WILL BE GENERATED TO THE WEB SERVER.

	Hardware Points				Software Points						
Point Name	**AI**	**AO**	**BI**	**BO**	**AV**	**BV**	**Loop**	**Sched**	**Trend**	**Alarm**	**Show On Graphic**
Pump Status (Current Switch)			x						x		x
Pump Start/Stop				x					x		x
Schedule								x			

CIRCULATION PUMP DETAIL CP-1 (CONTROL PANEL CP-1) | NTS | 2

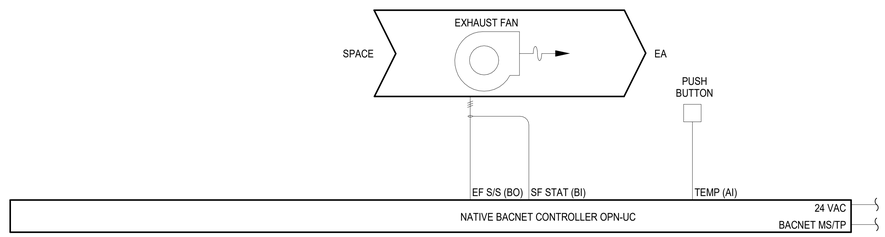

SEQUENCE OF OPERATION

EXHAUST FANS
RUN CONDITIONS - COOLING
THE UNIT WILL BE ENABLED ACCORDING TO A USER DEFINABLE TIME SCHEDULE IN THE FOLLOWING MODES:

OCCUPIED MODE: THE UNIT WILL MAINTAIN A SPACE TEMPERATURE COOLING SETPOINT OF 78°F (ADJ.).

-SET OCCUPIED SCHEDULE TO CONTINUOUSLY OCCUPIED

ALARM:
A HIGH SPACE TEMPERATURE ALARM WILL BE GENERATED AT THE WEB SERVER FRONT END IF THE SPACE TEMPERATURE EXCEEDS 85° F (ADJ.)

	Hardware Points				Software Points						
Point Name	**AI**	**AO**	**BI**	**BO**	**AV**	**BV**	**Loop**	**Sched**	**Trend**	**Alarm**	**Show On Graphic**
Space Setpoint Adjust	x										x
Space Temp	x								x	x	x
Fan Status			x						x		x
Space Unoccupied Override			x						x		x
Fan Start/Stop				x					x		x
Schedule								x			
Cooling Setpoint									x		x
Fan Failure										x	x
Fan in Hand										x	
Fan Runtime Exceeded										x	
High Space Temp										x	
Totals	**2**	**0**	**2**	**1**	**0**	**0**	**0**	**1**	**5**	**5**	**7**

EXHAUST FAN EF-4 - ELECTRICAL RM (CONTROL PANEL CP-1) | NTS | 6

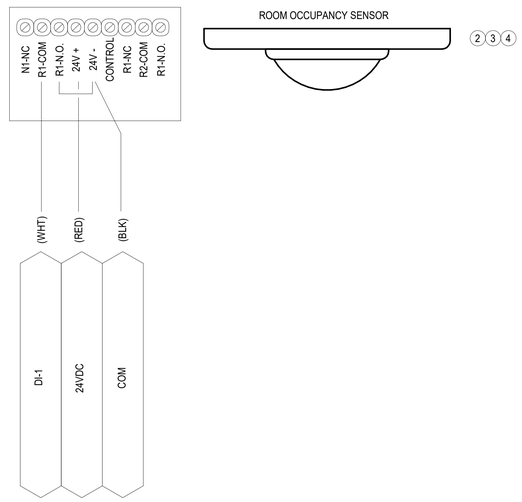

TYPICAL ROOM OCCUPANCY SENSOR DIAGRAM | NTS | 3

KEY NOTES

1. LIGHT SWITCH AND LINE VOLTAGE WIRING FURNISHED AND INSTALLED BY ELECTRICAL CONTRACTOR.
2. CONTROLS CONTRACTOR SHALL PROVIDE OCCUPANCY SENSOR WIRING AND REQUIRED COMPONENTS OF THE SYSTEM, CONFIRM WITH THE MANUFACTURER FOR MODEL NUMBER DEPENDING ON ROOM SIZES, WIRING AND GUIDE LINE.
3. REFER TO FLOOR PLANS FOR LOCATIONS.
4. PROVIDE REQUIRED TRANSFORMER AND POWER.

GENERAL NOTES

1. INCLUDED IN SCOPE OF WORK IS TO WORK WITH AND ASSIST MECHANICAL AND TAB CONTRACTORS, AS WELL AS COMMISSIONING AGENTS DURING SYSTEMS TESTING, BALANCING, AND COMMISSIONING.

IDENTIFICATION STAMP
DIV. OF THE STATE ARCHITECT
APP. 04-118693 INC:
REVIEWED FOR
SS ☑ FLS ☑ ACS ☑
DATE: 03.13.2020

Revision / Date

PMPE CONSULTANTS MECHANICAL ENGINEERS
5755 Oberlin Drive, Suite #102
San Diego, CA 92121
Tel: (858) 642-0800
Fax: (858) 642-0802
Consultant

REGISTERED PROFESSIONAL ENGINEER
MAX PAJOUHESH
M27488
EXP. 06/30/21
MECHANICAL
STATE OF CALIFORNIA
Engineer

studioWC
ARCHITECTURE + ENGINEERING
515 Encinitas Blvd, Ste 201, Encinitas, California 92024
Telephone: (760) 634-8880 Fax: (760) 452-7341

LICENSED ARCHITECT
ROBERT D. WEBB
RENEWAL: OCTOBER 31, 2021
C-28036
STATE OF CALIFORNIA

CHET F. HARRITT ELEM. SCHOOL
LRC & CLASSROOM ADDITION
SANTEE SCHOOL DISTRICT

CONTROL DIAGRAMS

Drawn: MM
Checked: MP
Date:
Job:

M6.4

NETWORK PANEL PHYSICAL LAYOUT

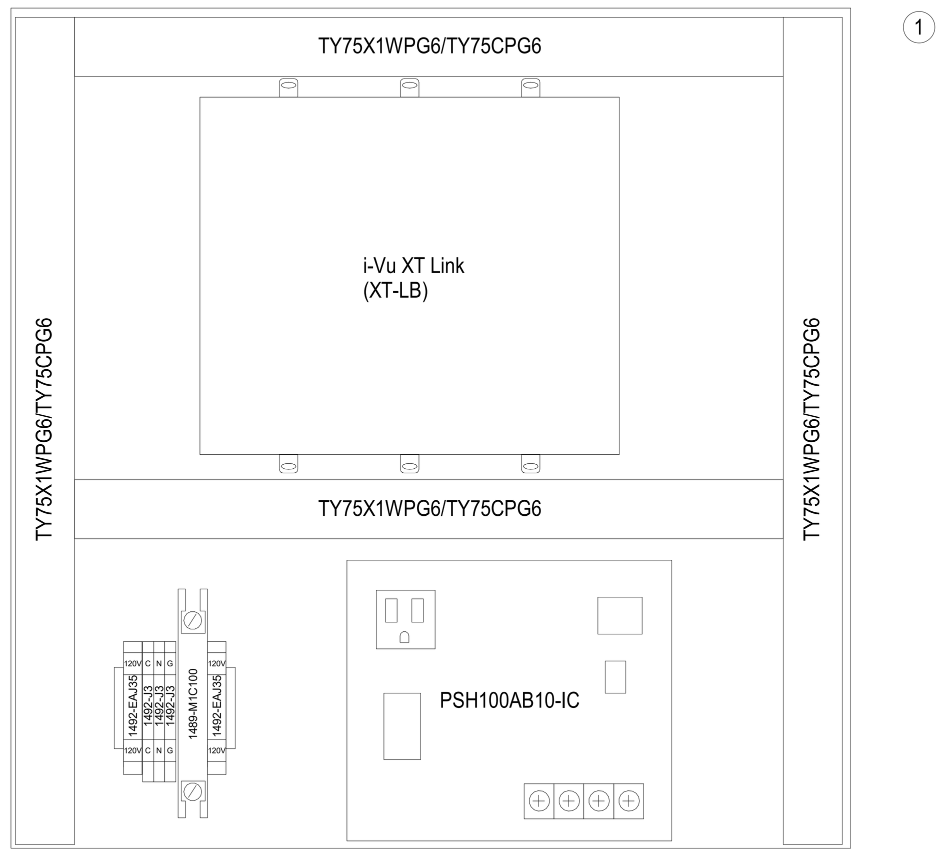

I-VU NETWORK LINK (NL-1) NTS 3

20"x20"x6" CONTROL PANEL PHYSICAL LAYOUT

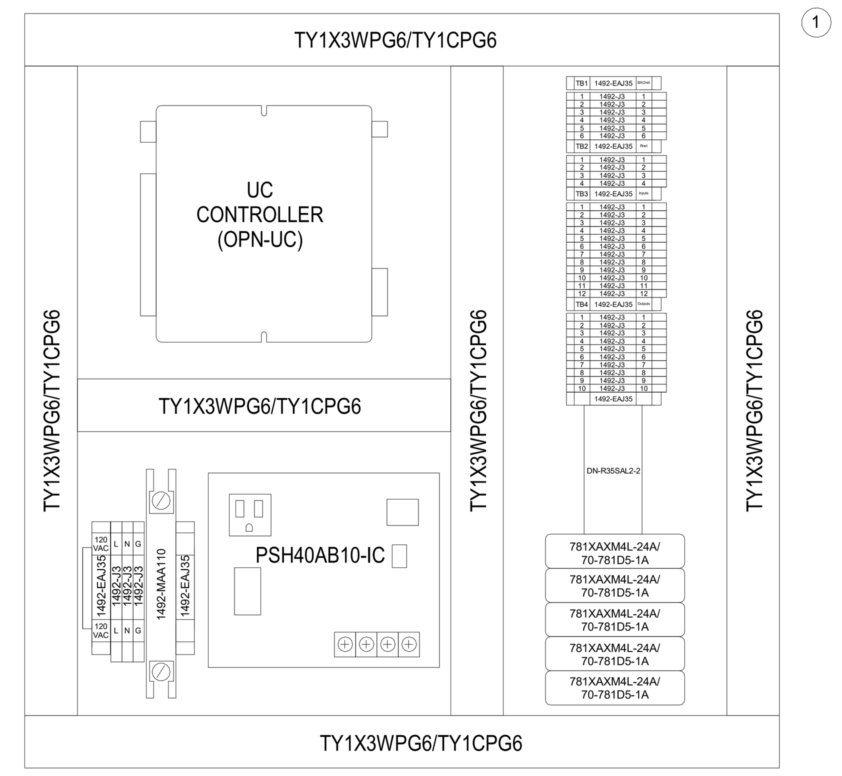

CONTROL PANEL DETAIL (CP-1) NTS 1

(2)

WATER HEATER BACNET POINTS LIST					
DESCRIPTION	INPUTS		OUTPUTS		REMARKS
	ANALOG	BINARY	ANALOG	BINARY	
ENABLE/DISABLE				x	
STATUS		x			
ALARM		x			
SETPOINT			x		
SUPPLY WATER TEMPERATURE	x				

SEQUENCE OF OPERATION

SYSTEM OPERATION
THE ELECTRIC HOT WATER HEATER WILL BE ENABLED TO RUN BASED ON A USER DEFINED OCCUPANCY SCHEDULE. THE UNIT WIL RUN BASED ON ITS OWN INTERNAL SAFTIES AND CONTROL.

TEMPERATURE CONTROL
THE SETPOINT WILL BE SET TO MAINTAIN 120°F (ADJ.)

ALARMS
ALARMS WILL BE MONITORED AND SENT TO THE I-VU SERVER

ELECTRIC WATER HEATER BACNET INTEGRATION (EWH-1) NTS 4

(2)

EXTERIOR LIGHTING BACNET POINTS LIST					
DESCRIPTION	INPUTS		OUTPUTS		REMARKS
	ANALOG	BINARY	ANALOG	BINARY	
SCHEDULE		x			
LIGHTING ON/OFF				x	
PHOTO CELL		x			

SEQUENCE OF OPERATION

SYSTEM OPERATION
EXTERIOR LIGHTING CIRCUIT SHALL BE ENABLED WHEN SCHEDULED OCCUPIED AND WHEN THE PHOTO CELL DOES NOT SENSE LIGHT.

LIGHTING PANEL BACNET INTAGRATION (LP-1) NTS 2

KEY NOTES

1. POWER FOR PANEL MOUNTED TRANSFORMER TO BE FURNISHED AND INSTALLED BY THE ELECTRICAL CONTRACTOR.
2. BACNET POINTS LIST TO BE PROVIDED BY EQUIPMENT MANUFACTURER

GENERAL NOTES

1. INCLUDED IN SCOPE OF WORK IS TO WORK WITH AND ASSIST MECHANICAL AND TAB CONTRACTORS, AS WELL AS COMMISSIONING AGENTS DURING SYSTEMS TESTING, BALANCING, AND COMMISSIONING.

IDENTIFICATION STAMP
DIV. OF THE STATE ARCHITECT
APP. 04-118693 INC:
REVIEWED FOR
SS ☑ FLS ☑ ACS ☑
DATE: 03.13.2020

Revison | Date

PMPE CONSULTANTS MECHANICAL ENGINEERS
5755 Oberlin Drive, Suite #102
San Diego, CA 92121
Tel: (858) 642-0800
Fax: (858) 642-0802
Consultant

REGISTERED PROFESSIONAL ENGINEER MAX PAJOUHESH M27488 EXP.:06/30/21 MECHANICAL STATE OF CALIFORNIA
Engineer

studioWC ARCHITECTURE + ENGINEERING
515 Encinitas Blvd. Ste. 201, Encinitas, California 92024
Telephone: (760)753-6800 Fax: (760)452-7541

LICENSED ARCHITECT ROBERT D. WEBB A.I.A. C-28036 OCTOBER 31, 2021 STATE OF CALIFORNIA

CHET F. HARRITT ELEM. SCHOOL
LRC & CLASSROOM ADDITION
SANTEE SCHOOL DISTRICT

CONTROL DIAGRAMS

Drawn: MM
Checked: MP
Date:
Job:

M6.5

PLUMBING GENERAL NOTES

1. REVIEW THESE PLANS AND SPECIFICATIONS INCLUDING PLANS AND SPECIFICATIONS OF OTHER TRADES PRIOR TO BID. ANY ITEMS REQUIRING CLARIFICATION SHALL BE BROUGHT TO THE ATTENTION OF THE ARCHITECT OF RECORD IN SUFFICIENT TIME TO BE INCORPORATED INTO THE BID.
2. VERIFY & COORDINATE EXACT LOCATION OF EQUIPMENT, PENETRATIONS THROUGH ROOF, FLOOR AND WALLS WITH ARCHITECTURAL, STRUCTURAL, MECHANICAL AND ELECTRICAL PRIOR TO SHOP DRAWINGS AND CONSTRUCTION.
3. COORDINATE EXACT SIZE AND ROUTING OF PIPING WITH ARCHITECTURAL, STRUCTURAL AND ELECTRICAL PRIOR TO SHOP DRAWING AND CONSTRUCTION.
4. PROVIDE A COMPLETE SET OF SHOP DRAWINGS AND DETAILS BASED ON ACTUAL FIELD MEASUREMENT AND EQUIPMENT PROCURED.
5. PROVIDE ACCESS AND CLEARANCES FOR EQUIPMENT MAINTENANCE AS RECOMMENDED BY APPLICABLE CODES AND EQUIPMENT MANUFACTURER. COORDINATE WITH OTHER TRADES.
6. CONTRACTOR SHALL BE RESPONSIBLE FOR PROTECTION AND REPAIR OF ADJACENT EXISTING SURFACES, EQUIPMENT, AREAS & PROPERTY THAT MAY BE DAMAGED AS A RESULT OF DEMOLITION AND/OR NEW WORK.
7. FOR CONDITIONS THAT PIPE AND CONDUIT SUPPORT IS NOT PROVIDED, REFER TO SMACNA DETAILS.
8. ALL WORK SHALL COMPLY WITH ALL APPLICABLE CODES, SPECIFICATIONS AND REQUIREMENTS OF AGENCIES HAVING JURISDICTION AND INDUSTRY STANDARDS.
9. VERIFY EXACT LOCATION OF PLUMBING FIXTURES AND FLOOR DRAINS WITH THE ARCHITECT.
10. TERMINATE VENTS THRU ROOF A MINIMUM OF 18 INCHES ABOVE ROOF AND MINIMUM 10 FEET HORIZONTAL AWAY FROM OUTSIDE AIR INTAKES.
11. FOR EXACT LOCATION OF ALL PLUMBING FIXTURES AND PIPE CHASES REFER TO ARCHITECTURAL DRAWINGS.
12. COORDINATE EXACT LOCATION AND SIZES FOR PIPE SLEEVES THRU CONCRETE WALL OMINIMUM R FLOOR WITH STRUCTURAL AND ARCHITECTURAL DRAWINGS.
13. PRIOR TO INSTALLATION VERIFY EXACT LOCATION, INVERT ELEVATION, PIPE SIZES AND POINT OF CONNECTION. NOTIFY THE ARCHITECT OF ANY DISCREPANCIES.
14. LOCATE ALL VALVES WHERE THEY ARE READILY ACCESSIBLE. WHERE VALVES ARE INSTALLED WITHIN OR BEHIND WALLS OR ABOVE A CEILING, PROVIDE ACCESS PANEL.
15. ALL PIPES THRU FIRE RATED WALL SHALL BE INSTALLED WITH AN APPROVED FIRE STOP SYSTEM.
16. THESE DRAWINGS ARE ESSENTIALLY DIAGRAMMATIC AND ARE NOT INTENDED TO INDICATE ALL DETAILS AND NECESSARY OFFSETS OF PIPING. THE CONTRACTOR SHALL INSTALL MATERIAL AND EQUIPMENT IN A MANNER TO AVOID OBSTRUCTIONS, PRESERVE HEADROOM AND KEEP OPENING AND PASSAGEWAYS CLEAR. ALL INSTALLATIONS SHALL COMPLY WITH NORMALLY ACCEPTABLE INDUSTRY STANDARDS. THE CONTRACTOR SHALL NOTIFY THE ARCHITECT IN WRITING OF ANY DISCREPANCIES OR CONFLICTS THAT WOULD AFFECT THE SYSTEM PERFORMANCE OR INCUR ADDITIONAL COSTS. THIS NOTIFICATION SHALL BE SUBMITTED PRIOR TO INSTALLATION OF THE ITEMS CONCERNED.
17. SUBSTITUTION IS NOT ALLOWED WITHOUT APPROVAL OF OWNER AND ARCHITECT OF THE RECORD. SUBSTITUTION OF MECHANICAL EQUIPMENT WITH EFFICIENCIES LOWER THAN THOSE INDICATED ON THE PLANS MAY REQUIRE RECALCULATION OF TITLE 24 DOCUMENTS. IF THE CONTRACTOR CHOOSES TO UTILIZE SUCH EQUIPMENT, HE/SHE ASSUMES FULL RESPONSIBILITY FOR THE RECALCULATION AND JURISDICTIONAL APPROVAL OF TITLE 24 DOCUMENTS. A SUBSTITUTION OF EQUIPMENT OF A GREATER WEIGHT OR OF DIFFERENT DIMENSIONS WHICH AFFECTS STRUCTURAL DETAILS OR SUPPORTS MUST BE APPROVED BY DSA IN A CCD, PRIOR TO CONSTRUCTING THE WORK OR INSTALLING THE EQUIPMENT. CONTRACTORS ARE RESPONSIBLE TO PROVIDE ALL REQUIRED DOCUMENTATION FOR DSA REVIEW AND APPROVAL DESIGN CHANGES, AND REVISIONS TO MOUNTING DETAILS IS NOT INCLUDES IN OUR SCOPE OF WORK.
18. IF THE CONTRACTOR'S USE OF SUBSTITUTE MATERIAL, EQUIPMENT OR METHODS OF INSTALLATION REQUIRES ANY CHANGES IN OTHER TRADES WORK FROM THAT SHOWN ON THE DRAWINGS, THE EXTRA COST IS THE RESPONSIBILITY OF THE CONTRACTOR INITIALING THE SUBSTITUTION.
19. SUBMITTALS: APPROVAL OF THE SUBMITTALS DOES NOT RELEASE THE CONTRACTOR FROM OBLIGATIONS TO FULLY COMPLY WITH ALL REQUIREMENTS OF THE CONSTRUCTION DOCUMENTS OR APPLICABLE CODE REGULATIONS.
20. CROSS CONNECTION PROTECTION SHALL BE PROVIDED AT ALL POTABLE WATER SUPPLIED APPLIANCES AND EQUIPMENT.
21. ALL HOSE BIBBS SHALL BE EQUIPPED WITH VACUUM BREAKER.
22. VERIFY SIZE, LOCATIONS, DEPTH AND WATER PRESSURE OF BLDG. PLUMBING UTILITIES WITH CIVIL ENGINEER.
23. DOMESTIC WATER HEATER SHALL BE SEISMICALLY SECURED TO BLDG. STRUCTURE WITH ADEQUATE STRUCTURAL SUPPORT AND ANCHOR BOLTS TO WITHSTAND 0.2g LATERAL AND VERTICAL LOAD.
24. ALL CONDENSATE DRAIN PIPING FROM EQUIPMENT WITHIN BLDG. SHALL BE COPPER AND INSULATED INCLUDING ELBOWS, TEES AND OTHER FITTINGS. INSULATION SHALL BE CONTINUOUS THROUGH ROOF , STUDS AND ANY OHTER BLDG. STRUCTURAL MEMBERS.
25. NO PLUMBING SHALL BE INSTALLED UNTIL ALL REQUIRED PLUMBING PLAN CHECK PERMITS AND APPROVALS HAVE BEEN OBTAINED FROM ALL REQUIRED AGENCIES.
26. PROVIDE ALL TAILPIECES, TRAPS AND SUPPLY PIPING TO LAVATORIES DESIGNED AS ACCESSIBLE WITH PREFORMED INSULATION JACKET.
27. COORDINATE AND SCHEDULE TIMING WITH SCHOOL DISTRICT FOR UTILITY SERVICE DISCONNECTION AND CONNECTION.
28. ALL LINES BELOW SLAB ON GRADE TO BE LOCATED AWAY FROM ALL LOAD BEARING FOOTINGS.
29. ANY STRUCTURAL FIREPROOFING DAMAGED DURING INSTALLATION OF PLUMBING EQUIPMENT, PIPING, ETC. SHALL BE REPAIRED AT NO COST TO THE OWNER. REPAIR SHALL BE DIRECTED BY THE ARCHITECT.
30. PRIOR TO INSTALLATION OF TRAP PRIMERS, WATER HAMMERS AND SHUT-OFF VALVES ABOVE CEILING COORDINATE EXACT LOCATION OF REQUIRED ACCESS DOORS WITH ARCHITECT OF RECORD.
31. PAINT ALL EXPOSED COPPER PIPE, VERIFY COLOR WITH ARCHITECT OF RECORD.
32. PAINT ALL EXPOSED GAS PIPE. VERIFY COLOR WITH ARCHITECT OF RECORD.
33. INSTALL VALVES WITH UNIONS OR FLANGES AT EACH PIECE OF EQUIPMENT AND ARRANGE TO ALLOW SERVICES. MAINTENANCE, AND EQUIPMENT REMOVAL WITHOUT SYSTEM SHUT-DOWN.
34. ALL DHW AND DHWR PIPING INCLUDING PIPING INSIDE THE WALL SHALL BE INSULATED ACCORDING WITH GOVERNING CODES. INSULATION SHALL COMPLY WITH STATE FIRE MARSHAL CRITERIA AND SHALL NOT EXCEED FLAME SPREAD OF 25 AND SMOKE DEVELOP RATING OF NOT MORE THAN 50 WHEN TESTED AS A COMPOSITE INSULATION INCLUDING INSULATION, FACING MATERIALS, TAPES AND ADHESIVE AS NORMALLY APPLIED.
35. DCW PIPE WITHIN 5 FEET OF WATER HEATER SHALL BE INSULATED.

ANCHORAGE NOTES

MEP COMPONENT ANCHORAGE NOTE:
ALL MECHANICAL, PLUMBING AND ELECTRICAL COMPONENTS SHALL BE ANCHORED AND INSTALLED PER THE DETAILS ON THE DSA APPROVED CONSTRUCTION DOCUMENTS. WHERE NO DETAIL IS INDICATED, THE FOLLOWING COMPONENTS SHALL BE ANCHORED OR BRACED TO MEET THE FORCE AND DISPLACEMENT REQUIREMENTS PRESCRIBED IN THE 2016 CBC, SECTIONS 1616A.1.18 THROUGH 1616A.1.26 AND ASCE 7-10 CHAPTER 13, 26 AND 30.

1. ALL PERMANENT EQUIPMENT AND COMPONENTS.
2. TEMPORARY OR MOVABLE EQUIPMENT THAT IS PERMANENTLY ATTACHED (E.G. HARD WIRED) TO THE BUILDING UTILITY SERVICES SUCH AS ELECTRICITY, GAS OR WATER.
3. MOVABLE EQUIPMENT WHICH IS STATIONED IN ONE PLACE FOR MORE THAN 8 HOURS AND HEAVIER THAN 400 POUNDS ARE REQUIRED TO BE ANCHORED WITH TEMPORARY ATTACHMENTS.

THE FOLLOWING MECHANICAL AND ELECTRICAL COMPONENTS SHALL BE POSITIVELY ATTACHED TO THE STRUCTURE, BUT NEED NOT BE DETAILED ON THE PLANS. THESE COMPONENTS SHALL HAVE FLEXIBLE CONNECTIONS PROVIDED BETWEEN THE COMPONENT AND ASSOCIATED DUCTWORK, PIPING AND CONDUIT.

A. COMPONENTS WEIGHING LESS THAN 400 POUNDS AND HAVE A CENTER OF MASS LOCATED 4 FEET OR LESS ABOVE THE ADJACENT FLOOR OR ROOF LEVEL THAT DIRECTLY SUPPORT THE COMPONENT.
B. COMPONENTS WEIGHING LESS THAN 20 POUNDS, OR IN THE CASE OF DISTRIBUTED SYSTEMS, LESS THAN 5 POUNDS PER FOOT, WHICH ARE SUSPENDED FROM A ROOF OR FLOOR OR HUNG FROM A WALL.

FOR THOSE ELEMENTS THAT DO NOT REQUIRE DETAILS ON THE APPROVED DRAWINGS, THE INSTALLATION SHALL BE SUBJECT TO THE APPROVAL OF THE STRUCTURAL ENGINEER OF RECORD AND THE DSA DISTRICT STRUCTURAL ENGINEER. THE PROJECT INSPECTOR WILL VERIFY THAT ALL COMPONENTS AND EQUIPMENT HAVE BEEN ANCHORED IN ACCORDANCE WITH ABOVE REQUIREMENTS.

PIPING, DUCTWORK AND ELECTRICAL DISTRIBUTION SYSTEM BRACING NOTE:
PIPING, DUCTWORK AND ELECTRICAL DISTRIBUTION SYSTEMS SHALL BE BRACED TO COMPLY WITH THE FORCES AND DISPLACEMENTS PRESCRIBED IN ASCE 7-10 SECTION 13.3 AS DEFINED IN ASCE 7-10 SECTION 13.6.5.6, 13.6.7, 13.6.8, AND 2016 CBC, SECTIONS 1616A.1.24, 1616A.1.25 AND 1616A.1.26.

THE METHOD OF SHOWING BRACING AND ATTACHMENTS TO THE STRUCTURE FOR THE IDENTIFIED DISTRIBUTION SYSTEM ARE AS NOTED BELOW. WHEN BRACING AND ATTACHMENTS ARE BASED ON A PREAPPROVED INSTALLATION GUIDE (E.G. SMACNA OR OSHPD OPM), COPIES OF THE BRACING SYSTEM INSTALLATION GUIDE OR MANUAL SHALL BE AVAILABLE ON THE JOBSITE PRIOR TO THE START OF AND DURING THE HANGING AND BRACING OF THE DISTRIBUTION SYSTEMS. THE STRUCTURAL ENGINEER OF RECORD SHALL VERIFY THE ADEQUACY OF THE STRUCTURE TO SUPPORT THE HANGER AND BRACE LOADS.

MECHANICAL PIPING (MP), MECHANICAL DUCTS (MD), PLUMBING PIPING (PP), ELECTRICAL DISTRIBUTION SYSTEMS (E):

MP	MD	PP	E	
☐	☐	☐	☐	- OPTION 1: DETAILED ON THE APPROVED DRAWINGS WITH PROJECT SPECIFIC NOTES AND DETAILS.
☐	☐	☐	☐	- OPTION 2:SHALL COMPLY WITH THE APPLICABLE OSHPD PRE-APPROVED OPM#.
☐	☐	☒	☐	- OPTION 3: SHALL COMPLY WITH SMACNA SEISMIC RESTRAINT MANUAL. OSHPD EDITION (2009), INCLUDE ANY ADDENDA, FASTENERS AND OTHER AMENDMENTS NOT SPECIFICALLY IDENTIFIED IN THE SMACNA SEISMIC RESTRAINT MANUAL. OSHPD EDITION ARE DETAILED ON THE APPROVED DAWINGS WITH PROJECT SPECIFIC NOTES AND DETAILS. THE DETAILS SHALL ACCOUNT FOR THE APPLICABLE SEISMIC HAZARD LEVEL "C" AND CONNECTION LEVEL "1" FOR THE PROJECT AND CONDITIONS.

PLUMBING SYMBOLS & ABBREVIATIONS

SYMBOLS	ABBREV.	DESCRIPTION
	DCW	DOMESTIC COLD WATER PIPING
	DHW	DOMESTIC HOT WATER PIPING
	DHWR	DOMESTIC HOT WATER RETURN PIPING
	S/W	SOIL / WASTE PIPE
	V	VENT PIPING
-TP-	TP	TRAP PRIMER PIPE
CD	CD	CONDENSATE DRAIN
G	G	LOW PRESSURE GAS
MPG	MPG	MEDIUM PRESSURE GAS
P&T	P&T	PRESSURE & TEMPERATURE RELIEF PIPING
RD	RD	ROOF DRAIN PIPING
OFD	OFD	OVERFLOW ROOF DRAIN PIPING
	POC	POINT OF CONNECTION
	CKV	CHECK VALVE
	BLV	BALANCING VALVE
	PRV	PRESSURE REDUCING VALVE
	BV	BALL VALVE
	ANV	ANGLE VALVE
	P & T	PRESSURE AND TEMPERATURE RELIEF VALVE
	BFP	BACK FLOW PREVENTER
	GCK	GAS COCK
		VALVE ON RISE OR DROP
	STR	STRAINER
	CL	CAPPED LINE
	DN	DOWN OR DROP
	UP	RISE OR RISER
	PG	PRESSURE GAUGE WITH BALL VALVE
	FC	FLEXIBLE CONNECTION (PIPE)
	TI	THERMOMETER
	U	UNION
	HB	HOSE BIBB
	TP	TRAP PRIMER
	WHA	WATER HAMMER ARRESTOR
WCO	WCO	WALL CLEAN OUT
CO	CO	CLEAN OUT
FCO	FCO	FLOOR CLEAN OUT
COTG	COTG	CLEAN OUT TO GRADE
- --		SYMBOL, SEE EQUIPMENT SCHEDULE
	FD	FLOOR DRAIN
	FS	FLOOR SINK
	SOV	SHUT-OFF VALVE
		GAS PRESSURE REGULATOR

PLUMBING SYSTEMS TITLE 24 COMPLIANCE

1. WATER CLOSETS SHALL NOT CONSUME MORE THAN 1.28 GALLONS PER FLUSH. URINALS SHALL NOT CONSUME MORE THAN 0.125 GALLON PER FLUSH. BOTH FIXTURES SHALL BE LISTED ON THE WATER AUTHORITY "LIST OF APPROVED LOW CONSUMPTION FIXTURES".
2. ALL LAVATORY FAUCETS SHALL DISCHARGE A MAXIMUM OF 0.5 GPM/ 0.2 GPC FOR METERING FAUCET
3. ALL SINK FAUCETS SHALL DISCHARGE A MAXIMUM OF 1.5 GPM.
4. ALL WATER HEATERS SHALL COMPLY WITH 2016 CPC SECTION 608.5
5. PLUMBING PIPING SYSTEM SHALL BE INSULATED PER BUILDING ENERGY EFFICIENCY STANDARDS SECTION 120.3
6. DOMESTIC HOT WATER HEATERS SHALL COMPLY WITH THE 2016 BUILDING ENERGY STANDARD CODE SECTION 100.1, 150.0 AND 150.1.

PLUMBING ABBREVIATIONS

ABBREV.	DESCRIPTION
AFF	ABOVE FINISHED FLOOR
AFG	ABOVE FINISHED GRADE
ARCH.	ARCHITECTURAL
B/F	BELOW FLOOR
BTU	BRITISH THERMAL UNIT
BTUH	BRITISH THERMAL UNIT (PER HOUR)
CFH	CUBIC FEET (PER HOUR)
CLG	CEILING
CONC	CONCRETE
CONN	CONNECT
RD	ROOF DRAIN
DCW	DOMESTIC COLD WATER
DHW	DOMESTIC HOT WATER
DHWR	DOMESTIC HOT WATER RETURN
CD	CONDENSATE DRAIN
DWGS.	DRAWINGS
ELECT.	ELECTRICAL
EXIST. (E)	EXISTING
°F	DEGREES FAHRENHEIT
FS	FLOOR SINK
FT	FEET OR FOOT
FU	FIXTURE UNIT
FV	FLUSH VALVE
GA.	GAUGE
GALV	GALVANIZED
GPF	GALLONS PER FLUSH
GPM	GALLONS PER MINUTE
GPR	GAS PRESSURE REGULATOR
HB	HOSE BIBB
HR	HOUR
IE	INVERT ELEVATION
INV	INVERT
IW	INDIRECT WASTE
JS	JANITOR SINK
LBS	POUNDS
MAX	MAXIMUM
MECH	MECHANICAL
MFR	MANUFACTURER
MIN	MINIMUM
(N)	NEW
NIC	NOT IN CONTRACT
NO.	NUMBER
NTS	NOT TO SCALE
ORD	OVER FLOW ROOF DRAIN
POC	POINT OF CONNECT
QTY.	QUANTITY
RD	ROOF DRAIN
REF	REFERENCE
SOV	SHUT OFF VALVE
SPEC.	SPECIFICATION
STRUCT	STRUCTURAL
TEMP.	TEMPERATURE
TYP.	TYPICAL
UR	URINAL
V/PH/HZ	VOLTS/PHASE/HERTZ
V	VENT
VTR	VENT THRU ROOF
W	WASTE
WC	WATER CLOSET

REQUIREMENTS FOR SHOP DRAWINGS

PRIOR TO CONSTRUCTION PROVIDE ORIGINALLY PREPARED CONTRACTOR'S SHOP DRAWINGS IN ELECTRONIC FORMAT. IN ADDITION TO THE REQUIREMENTS SPECIFIED IN SPECIFICATIONS, THE SHOP DRAWINGS SHALL INCLUDE AND NOT LIMITED TO THE FOLLOWING:

1. PIPE AND PLUMBING ELEVATIONS.
2. ACTUAL SIZE OF PURCHASED EQUIPMENT AND FIXTURES, PER APPROVED CONTRACTOR'S SHOP DRAWINGS.
3. ACCESS PANELS, INCLUDING CEILING PANELS, COORDINATED WITH ARCHITECT OF RECORD.
4. ACCESS CLEARANCES FOR EQUIPMENT AND FIXTURES.
5. ACTUAL LOCATIONS OF SHUT-OFF VALVES, WITH ACCESS COORDINATED WITH ARCHITECT OF RECORD.
6. LOCATIONS OF STRUCTURAL MEMBERS SUCH AS BEAMS IN RELATION TO ALL PLUMBING SYSTEMS AND HVAC SYSTMES.
7. COLOR CODED PIPING BASED ON MATERIAL USED, SHOW OTHER SYSTEMS SUCH AS HVAC AND ELECTRICAL TO INSURE THER ARE NO CONFLICT.
8. MINIMUM 1/4"-1'-0" SCALE DRAWINGS.
9. LABEL AND TAG SCHEDULE FOR EQUIPMENT
10. PIPE LOCATION TO CLEAR BEAMS OR TIGHT AREAS.
11. POINT OF CONNECTION TO UTILITIES OUTSIDE THE BUILDING, WITH INVERT ELEVATION COORDINATED WITH CIVIL.
12. SECTIONS OR 3-D DRAWINGS OF CONGESTED AREAS.
13. GRID LINES.
14. UTILITY PROFILES FOR UNDERGROUND PIPING, COORDINATE WITH CIVIL.
15. DO NOT COMMENCE WITH ANY INSTALLATION, DEMOLITION OR ORDERING OF ANY EQUIPMENT OR MATERIAL FABRICATION WITHOUT AN APPROVED SHOP DRAWING SUBMITTAL.
16. REFER TO P2.1 SPECIAL NOTES FOR ADDITIONAL REQUIREMENTS.

SHEET INDEX

P0.1	PLUMBING LEGEND & GENERAL NOTES
P0.2	PLUMBING FIXTURE SCHEDULE
P1.1	PLUMBING SITE PLAN - GAS
P2.1	PLUMBING FLOOR PLAN (WATER & GAS)
P2.2	PLUMBING FLOOR PLAN (WASTE, VENT & ROOF DRAINAGE)
P3.1	ENLARGED PLUMBING PLANS (WATER & GAS)
P3.2	ENLARGED PLUMBING PLANS (WASTE & VENT)
P4.1	PLUMBING ROOF PLAN
P4.2	ISOMETRIC DIAGRAM (GAS)
P4.3	ISOMETRIC DIAGRAMS (WATER & WASTE)
P5.1	PLUMBING DETAILS
P5.2	PLUMBING DETAILS

IDENTIFICATION STAMP
DIV. OF THE STATE ARCHITECT
APP. 04-118693 INC:
REVIEWED FOR
SS ☑ FLS ☑ ACS ☑
DATE: 03.13.2020

Revision	Date

PMPE CONSULTANTS MECHANICAL ENGINEERS
5755 Oberlin Drive, Suite #102
San Diego, CA 92121
Tel: (858) 642-0800
Fax: (858) 642-0802
Consultant

REGISTERED PROFESSIONAL ENGINEER
MAX PAJOUHESH
M27488
EXP. 06/30/21
MECHANICAL
STATE OF CALIFORNIA
Engineer

studioWC
ARCHITECTURE + ENGINEERING
515 Encinitas Blvd, Ste 201, Encinitas, California 92024
Telephone: (760) 634-8800 Fax: (760) 452-7341

LICENSED ARCHITECT
ROBERT O. WEBB
C-28036
OCTOBER 31, 2021
STATE OF CALIFORNIA

CHET F. HARRITT ELEM. SCHOOL
LRC & CLASSROOM ADDITION
SANTEE SCHOOL DISTRICT

PLUMBING LEGEND & GENERAL NOTES

Drawn: RA
Checked: MP
Date:
Job:

P0.1

PLUMBING FIXTURE CONNECTION SCHEDULE

SYMBOL	DESCRIPTION	MOUNTING	MIN. CONNECTION SIZE				OTHER ACCEPTABLE MANUFACTURERS OR EQUAL	REMARKS
			WASTE	VENT	DCW	DHW		
WC 1	WATER CLOSET: ADA COMPLIANT- KOHLER "HIGHCLIFF ULTRA" MODEL # K-96057-SS, ELONGATED BOWL, VITREOUS CHINA, ANTIMICROBIAL FINISH WITH 1-1/2" TOP SPUD. PROVIDE FLUSHOMETER SLOAN MODEL # 111-1.28, CHROME PLATED 1.28GPF. SEAT SHOULD BE 1" RING THICKNESS, ELONGATED OPEN FRONT LESS COVER, EXTRA HEAVY WEIGHT AND INJECTION MOLDED OF SOLID PLASTIC, OLSONITE #95CT, OR EQUAL. RIM MOUNTING HEIGHT 17"-19" AFF.	FLOOR	4"	2"	1"	--	WC: SLOAN VALVE COMPANY, ZURN INDUSTRIES LLC. FLUSHOMETER VALVE: DELANY PRODUCTS, ZURN INDUSTRIES LLC.	1 2 5 6 7
LAV 1	LAVATORY: ADA COMPLIANT - KOHLER "HUDSON" MODEL # 2805, WALL HUNG LAVATORY. PROVIDE WITH CHICAGO FAUCET #807-E2805-665PSHAB. DECK MOUNTED SINGLE HOLE SINGLE INLET METERING SINK FAUCET, 0.5 GPM, VANDAL RESISTANT WITH METERING ADJUSTABLE CYCLE TIME CLOSURE CARTRIDGE. LEAD FREE.	WALL	2"	1-1/2"	1/2"	--	LAV: AMERICAN STANDARDS, ZURN INDUSTRIES LLC. FAUCET: BRADLEY CORPORATION, MOEN INC.	1 2 3 4 5 7
LAV 2	LAVATORY: ADA COMPLIANT - KOHLER "HUDSON" MODEL # 2861, WALL HUNG LAVATORY. PROVIDE WITH CHICAGO FAUCET #844-E12-665PSHABCP. DECK MOUNTED 4" ON CENTER, HOT AND COLD WATER MIXING METERING , SINGLE BUTTON SINK FAUCET. AERATOR MODEL # E2805JKABCP FOR 0.5 GPM FLOW RESTRICTION. VANDAL RESISTANT WITH METERING ADJUSTABLE CYCLE TIME CLOSURE CARTRIDGE, SET METERING FAUCET TO DISCHARGE 0.2 GPC. LEAD FREE.	WALL	2"	1-1/2"	1/2"	1/2"	LAV: AMERICAN STANDARDS, ZURN INDUSTRIES LLC. FAUCET: BRADLEY CORPORATION, MOEN INC.	1 2 3 4 5 7
UR 1	URINAL: ADA COMPLIANT - RUBBERMAID ECOURINAL. MODEL #FG751220. WATER LESS URINAL SYSTEM	WALL	2"	2"	3/4"	--	URINAL: SLOAN VALVE COMPANY, ZURN INDUSTRIES LLC.	1 5 7 10 11
S 1	SINK: ADA COMPLIANT- JUST MANUFACTURING MODEL #CRACF-ADA-1923-A-GR-VRL-CT. SINK WITH INTEGRA-FLOW SYSTEM, TYPE 304, 18-8 STAINLESS STEEL, VANDAL RESISTANT, MODEL # JSFVR-5 FAUCET, JSB-10-VR BUBBLER, J-ADA-35-SSF-VR DRAIN SYSTEM, JT-150 CAST BRASS P-TRAP AND STOP/SUPPLY KITS.	COUNTER	2"	1-1/2"	1/2"	--	SINK: AMERICAN STANDARDS, ELKAY MANUFACTURER CO. FAUCET: CHICAGO FAUCETS, AMERICAN STANDARD	1 2 3 4 5 7 9
S 2	SINK: ADA COMPLIANT- ELKAY MODEL # LRAD1918, 19x18" X 5-1/2" DEEP, 18 GAUGE TYPE 304 STAINLESS STEEL, SINGLE COMPARTMENT SINK ADA COMPLIANT, SINGLE HOLE DRILLING CONFIGURATION FOR FAUCET. CHICAGO FAUCET MODEL #50-E35-317XKABCP DECK MOUNTED SINGLE HOLE, HOT AND COLD WATER, 1.5 GMP WATER FLOW AND LEAD FREE.	COUNTER	2"	1-1/2"	1/2"	1/2"	SINK: AMERICAN STANDARDS, ELKAY MANUFACTURER CO. FAUCET: JUST MANUFACTURING, AMERICAN STANDARD	1 2 3 4 5 7 9
S 3	SINK: ELKAY MODEL # LRAD1918, 19x18" X 6-1/2" DEEP, 18 GAUGE TYPE 304 STAINLESS STEEL, SINGLE COMPARTMENT SINK. CHICAGO FAUCET #350-E35VP317XKABCP, DECK MOUNTED SINGLE HOLE SINGLE SUPPLY SINK FAUCET, CHROME PLATED SOLID BRASS, GOOSENECK SPOUT, 1.5 GPM WATER FLOW, 4" METAL VANDAL PROFF WRISTBLADE HANDLE, LEAD FREE.	COUNTER	2"	1-1/2"	1/2"	--	SINK: AMERICAN STANDARDS, ELKAY MANUFACTURER CO. FAUCET: JUST MANUFACTURING, AMERICAN STANDARD	1 2 3 4 5 7 9
DF 1	DRINKING FOUNTAIN: ELKAY MODEL #EZWS-EDFP217K NO LEAD TWO LEVEL WALL MOUNT BARRIER FREE DRINKING FOUNTAIN WITH EXH20 BOTTLE FILLING STATION, SENSOR ACTIVATED. 18 GAUGE 300 SERIES STAINLESS STEEL POLISHED TO A LUSTROUS SATIN FINISH WITH ACCESS PANEL 12X38-5	WALL	2"	1-1/2"	1/2"	--	ACCORN ENGINEERING INC., ELKAY MANUFACTURER CO.	1 3 5 7
HB 1	HOSE BIBB: ACORN MODEL # 8151-SSLF, STAINLESS STEEL RECESSED HOSE BOX WITH WALL FLANGE, DOOR, REMOVABLE WHEEL HANDLE AND VACUUM BREAKER. INLET IS 3/4" NPT FEMALE OUTLET IS 3/4" MALE HOSE THREAD.	WALL	--	--	3/4"	--	JAY R. SMITH, WATTS , ZURN INDUSTRIES LLC.	1 3 7
HB 2	HOSE BIBB: ZURN MODEL #Z1388XL-V8. EXPOSED HEAD, NON-FREEZE ROOF HYDRANT DURA-COATED CAST IRON HEAD AND LIFT HANDLE WITH LOCK OPTION. GALVANIZED STEEL CASING, VACUUM BRAKER AND LEAD FREE.	ROOF	--	--	3/4"	--	JAY R. SMITH, WATTS, ACCORN ENGINNERING INC.	1 3 7
FD 1	FLOOR DRAIN: ZURN MODEL # Z415B-113, CAST IRON BODY WITH BOTTOM OUTLET, POLISHED NICKEL BRONZE STRAINER. 1/4" MAX. GRATE OPENING PER CBC 11B-608.9.	FLOOR	3"	1-1/2"	--	--	JAY R. SMITH, WATTS.	1 7
FS 1	FLOOR SINK: "J.R. SMITH" FLOOR SINK MODEL # 3200-12. 16.5" SQUARE NICKEL BRONZE TOP, CAST IRON FLANGED RECEPTOR WITH SEEPAGE HOLES 12" DEEP FLOOR SINK. ACID RESISTANT COATED INTERIOR, NICKEL BRONZE RIM AND SECURED CRATE. ALUMINUM DOME BOTTOM STRAINER. WITH 1/2" MAX. FLOOR DRAIN GRATE OPENINGS IN ALL DIRECTIONS IN P.O.T OR PEDESTRIAN WAYS.	FLOOR	6"	2"	--	--	ZURN, WATTS.	1 7 7
MS 1	MOP SINK: ACCORN MODEL #TDF-36-TF3 TERRAZO DROP FRONT MOP SINK WITH INTERGRAL DRAIN, TILING FLANGES AND MOP HANGER WITH CHICAGO FAUCET MODEL #540-LD897SWXFABCP CHROME PLATED FINISH, WALL MOUNTED WITH WALL MOUNTED FITTING, VACCUUM BREAKER, SPOUT WITH PAIL HOOK AND WALL BRACE AND WRISTBLADE HANDLE.	FLOOR	3"	1-1/2"	3/4"	3/4"	AMERICAN STANDARD, KOHLER.	1 2 3 7
RD 1	ROOF DRAIN: "JAY R. SMITH" MODEL # 1800. DUCO CAST IRON BODY WITH DOUBLE DECK PLATE WITH SECURING HOLES, COMBINED FLASHING CLAMP AND GRAVEL STOP FOR ROOF DRAIN AND EXTERNAL 2" WATER DAM FOR OVERFLOW DRAIN AND CAST IRON DOME. FOR PIPE SIZE CONNECTION, SEE FLOOR PLANS.	ROOF	--	--	--	--	WATTS , ZURN INDUSTRIES LLC.	1 7 8
ORD 1	OVERFLOW ROOF DRAIN DOWNSPOUT : "J.R. SMITH" MODEL #1770 WITH CAST BRONZE NOZZLE AND FLANGED .	WALL	--	--	--	--	WATTS , ZURN INDUSTRIES LLC.	1 7 8
EEW 1	EMERGENCY EYEWASH/SHOWER: ADA COMPLIANT "BRADLEY" MODEL # S19314AA1AABA00 BARRIER FREE DRENCH SHOWER AND EYE/FACE WASH UNIT WITH MIXING VALVE "NAVIGATOR" MODEL #S19-2150	FLOOR	2	1-1/2"	--	--	HAWS, GUARDIAN, ACCORN ENGINEERING INC.	1 5 7 1-1/4" TEMPERED WATER
EEW 2	EMERGENCY EYEWASH: ADA COMPLIANT "BRADLEY" MODEL #S19-220BF BARRIER FREE WALL/CABINET MOUT EYE/FACE WASH UNIT WITH WRAPAROUND SKIRT WITH MIXING VALVE NAVIGATOR S19-200 EFX8	FLOOR	2"	1-1/2"	--	--	HAWS, GUARDIAN, ACCORN ENGINEERING INC.	1 5 7 3/4" TEMPERED WATER
CT 1	CLAY TRAP: MIFAB MODEL #MI-SOLID-S. STAINLESS STEEL BODY SOLIDS INTERCEPTOR. ACID RESISTANT WITH INTERNAL STAINLESS STEEL PERFORATED SEDIMENT BUCKET REMOVABLE THROUGH TOP.	FLOOR	2	--	--	--	THE CERAMIC SHOP, ZURN INDUSTRIES LLC.	1 5 7
WHA 1	WATER HAMMER ARRESTOR: WATTS SERIES LF15M2 WATER HAMMER ARRESTOR, COPPER BODY AND LEAD FREE.	--	--	--	--	--	JAY R. SMITH, PPP INC. , ZUN INDUSTRIES LLC.	1 3 7
TP 1	TRAP PRIMER: WATTS SERIES LFTP3000 WITH BUILT IN VACCUM BREAKER LEAD FREE. MOUNT INSIDE THE WALL AND PROVIDE ACCESS DOOR PANEL AT HEIGHT PER MANUFACTURER'S WRITTEN INSTRUCTIONS.	--	--	--	--	--	MIFAB INC. , ZUN INDUSTRIES LLC., PPP INC.	1 3 7
MV 1	MIXING VALVE: WATTS MODEL# N170-M3 CSUT, HOT WATER MASTER TEMPERING VALVE, LEAD FREE.	WATER HEATER	--	--	1"	1"	SYMMONS INDUSTRIES INC., LAWLER MANUFACTURER COMPANY, LEANARD VALVE COMPANY.	1 3 5 7

1. PROVIDE REQUIRED MOUNTING HARDWARE AND DRAIN FOR COMPLETE INSTALLATION PER MANUFACTURED INSTALLATION GUIDE LINE.
2. PROVIDE THREADED FITTING STOP VALVE.
3. PLUMBING FIXTURES SHALL COMPLY WITH LEAD LAW (AB1953)
4. DRAIN, DCW AND DHW PIPES ACCESSIBLE UNDER FIXTURES SHALL BE INSULATED OR COVERED AND THERE SHALL BE NO SHARP OR ABRASIVE SURFACES UNDER FIXTURES PER CBC 11B.606.5
5. MOUNT PLUMBING FIXTURES AT ACCESSIBLE HEIGHT. SEE ARCHITECTURAL DRAWINGS.
6. WATER CLOSET WITH FLUSH HANDLE SHOULD BE IN THE WIDE SIDE OF THE ROOM. VERIFY AND PROVIDE AS REQUIRED. CONTRACTOR SHALL VERIFY AND ORDER ACCORDINGLY. MAKE ADJUSTMENT TO ROUGH-IN AS REQUIRED.
7. CONTRACTOR TO VERIFY AND INSTALL PLUMBING FIXTURES AS NOTED OR APPROVED EQUAL.
8. FOR ROOF DRAIN AND OVERFLOW PIPE SIZE, SEE FLOOR PLANS.
9. PRIOR TO PURCHASING SINKS, VERIFY SINK AND COUNTER TOP DIMENTIONS FOR PROPER FITTING.
10. URINALS SHALL BE WATERLESS TYPE. STUB-OUT PIPE THRU WALL AND CAP WITH A CHROME FINISH CAP FOR FUTURE CONNECTION TO FLUSH VALVE.
11. PROVIDE WALL CLEANOUT ABOVE URINALS.

ELECTRIC WATER HEATER SCHEDULE

SYMBOL	MANUFACTURER & MODEL NO.	LOCATION	SYSTEM SERVED	TYPE	CAPACITY (GALLONS)	RECOVERY (GPH) @ 60° TEMP.RISE	KW/AMPS	ELECTRICAL V/PH/HZ	OPER. WEIGHT (LBS.)	DETAIL	OTHER ACCEPTABLE MANUFACTUERS OR EQUAL	REMARKS
EWH 1	AO SMITH DVE-80-9	STORAGE ROOM #18	DOMESTIC HOT WATER	ELECTRIC STORAGE TANK	80	62	9/25	208/3/60	800	1/P5.2	RHEEM, BRADFORD WHITE.	3 NUMBER OF ELEMENTS @ 3,000 WATTAGE EACH (1)
EWH 2	EEMAX SP3512	ALL GENDER RESTROOM	DOMESTIC HOT WATER	ELECTRIC TANKLESS	--	--	3.5	120/29	3	7/P5.2	CHRONIMITE LAB. INC. STIEBEL ELTRON INC.	48° TEMPERATURE RISE AT 0.5 GPM. (1)

1. PROVIDE ALL REQUIRED MOUNTING HARDWARE, VALVES, PIPES AND ACCESSORIES FOR A COMPLETE INSTALLATION, FOLLOW MANUFACTURER'S INSTALLATION GUIDELINES.

CIRCULATING PUMP SCHEDULE

SYMBOL	MANUFACTURER & MODEL NO.	LOCATION	SYSTEM SERVED	TYPE	GPM	HEAD (FT.)	ELECTRICAL WATTS	ELECTRICAL RPM	ELECTRICAL V/PH/HZ	OPER. WEIGHT (LBS)	OTHER ACCEPTABLE MANUFACTURERS OR EQUAL	REMARKS
CP 1	BELL & GOSSETT NBF-9U/LW	STORAGE ROOM #18	EWH-1 DHWR	IN-LINE	5	6	41	2800	115/1/60	9.5	PACO PUMPS, GRUNDFOS PUMPS	1 2 3

1. CIRCULATION PUMP SHALL BE INSTALLED IN-LINE WITH PIPING AND COMPLIANCE WITH MANUFACTURER'S RECOMENDATIONS AND GUIDELINES.
2. SHALL COMPLY WITH LEAD LAW (AB1953) 3. CONTROL THRU AQUASTAT.

IDENTIFICATION STAMP
DIV. OF THE STATE ARCHITECT
APP. 04-118693 INC:
REVIEWED FOR
SS ☑ FLS ☑ ACS ☑
DATE: 03.13.2020

Revision / Date

PMPE CONSULTANTS MECHANICAL ENGINEERS
5755 Oberlin Drive, Suite #102
San Diego, CA 92121
Tel: (858) 642-0800
Fax: (858) 642-0802
Consultant

REGISTERED PROFESSIONAL ENGINEER
MAX PAJOUHESH
M27488
EXP. 06/30/21
MECHANICAL
STATE OF CALIFORNIA
Engineer

studioWC
ARCHITECTURE + ENGINEERING
515 Encinitas Blvd, Ste 201, Encinitas, California 92024
Telephone: (760) 634-8880 Fax: (760) 452-7341

LICENSED ARCHITECT
ROBERT O. WEBB
C-28036
OCTOBER 31, 2021
STATE OF CALIFORNIA

CHET F. HARRITT ELEM. SCHOOL
LRC & CLASSROOM ADDITION
SANTEE SCHOOL DISTRICT

PLUMBING FIXTURE SCHEDULE

Drawn: RA
Checked: MP
Date:
Job:

P0.2

PLUMBING SITE PLAN - GAS | 1" = 30'-0" | 1

KEY NOTES

1. EXISTING GAS METER AND PRESSURE REGULATOR ASSEMBLY SHALL REMAIN IN PLACE.
2. 1" MEDIUM GAS PRESSURE POINT OF COONNECTION TO EXISTING MPG PIPE. FIELD VERIFY EXACT POINT OF CONNECTION.
3. NEW MEDIUM PRESSURE GAS BELOW GROUND. MAINTAIN MPG PIPE AWAY FROM THE BUILDING FOOTPRINT.
4. PRIOR TO CONSTRUCTION, EMPLOY AN UTILITY DETECTOR COMPANY "CPL" OR SIMILAR TO LOCATE EXISTING UNDERGROUND PIPING AND IDENTIFY PIPING AND OTHER UNDERGROUND UTILITIES ALONG THE PATH OF NEW WORK.
5. PRIOR TO CONNECTING TO EXISTING GAS PIPE TRENCHING AND INSTALLATION OF NEW MPG PIPE, TAKE A READING OF EXISTING GAS LINE PRESSURE AT POINT OF CONNECTION. PROVIDE THE INFORMATION TO ARCHITECT OF RECORD TO CONFIRM THE NEW MPG PIPE SIZE.
6. EXISING MPG PIPE SHALL REMAIN IN PLACE AND ACTIVE.
7. PRIOR TO CONSTRUCTION, POTHOLE AREA OF MPG POINT OF CONNECTION AND VERIFY LOCATION OF EXISTING MPG PIPE AND PIPE SIZE. ANY ITEMS REQUIRING CLARIFICATION SHALL BE BROUGHT TO THE ATTENTION OF THE ARCHITECT OF RECORD.

GAS INFORMATION

GAS DEMAND

BUILDING	(E) GAS LOAD MBH	(N) GAS LOAD MBH
(E) BLDG. A	608	- -
(E) BLDG. B	1243	- -
(E) BLDG. C	724	- -
(N) BLDG.	- -	540
TOTAL	2575	540

GRAND TOTAL SCHOOL CAMPUS NEW GAS LOAD = 3115 MBH

MEDIUM PRESSURE GAS

TDL: 850'-0"
TOTAL GAS LOAD: 3115 MBH
GAS PIPE REQ AT (E) METER: 1-1/2"

MEDIUM PRESSURE GAS PIPE SIZING

PER CPC 2016 TABLE 12-11

TOTAL DEVELOP LENGHT	PIPE SIZE	GAS CAPACITY (MBH)
850'-0"	1/2"	288
850'-0"	3/4"	602
850'-0"	1"	1,130
850'-0"	1-1/4"	2,330
850'-0"	1-1/2"	3,490

GENERAL NOTES

1. FIELD VERIFY EXACT LOCATION AND POINT OF CONNECTION OF MEDIUM PRESSURE GAS TO EXISTING MPG BELOW THE GROUND.
2. ALL EXISTING GAS PIPE AND GAS METER ARE PER AS-BUILT DRAWINGS. FIELD VERIFY AS NOTED IN NOTE #4 BELOW.
3. PRIOR TO SHUTTING OF GAS SUPPLY TO ANY BUILDING, COORDIANTE, SCHEDULE AND NOTIFY THE SCHOOL DISTRICT PROJECT MANAGER AND SCHOOL PRINCIPAL. EXISTING SYSTEMS SHALL REMAIN IN PLACE AND OPERATIONAL IN BLDGS.
4. PRIOR TO NEW WORK, EMPLOY AN UNDERGROUN UTILITY DETECTOR COMPANY TO VERIFY ALL EXISTING UNDERGROUND UTILITIES ALONG THE NEW UNDERGROUND PIPING. EMPLOY "CPL" OR SIMILAR COMPANY. REPORTS SHALL INCLUDE TYPE OF UTILITIES AND INVERT ELEVATIONS.
5. ALL WORK SHALL COMPLY WITH ALL APPLICABLE CODES, SPECIFICATIONS AND REQUIREMENTS OF AGENCIES HAVING JURISDICTION AND INDUSTRY STANDARDS.
6. NO PLUMBING SHALL BE INSTALLED UNTIL ALL REQUIRED PLUMBING PLAN CHECK PERMITS AND APPROVALS HAVE BEEN OBTAINED FROM ALL REQUIRED AGENCIES.
7. ALL LINES BELOW SLAB ON GRADE TO BE LOCATED AWAY FROM ALL LOAD BEARING FOOTINGS.
8. ANY ITEMS REQUIRING CLARIFICATION SHALL BE BROUGHT TO THE ATTENTION OF THE ARCHITECT OF RECORD IN SUFFICIENT TIME TO BE INCORPORATED INTO THE BID DOCUMENTS.

LEGEND AND ABBREVIATIONS

(E) MPG	EXISTING MEDIUM PRESSURE GAS
MPG	MEDIUM PRESSURE GAS
MBH	1000 BTU (PER HOUR).
BTU	BRITISH THERMAL UNITS (PER HOUR)
TDL	TOTAL DEVELOPMENT LENGTH
– – – –	(E) MPG PIPE BELOW GROUND
— — —	(N) MPG PIPE BELOW GROUND

IDENTIFICATION STAMP
DIV. OF THE STATE ARCHITECT
APP. 04-118693 INC:
REVIEWED FOR
SS ☑ FLS ☑ ACS ☑
DATE: 03.13.2020

Revison | Date

PMPE CONSULTANTS MECHANICAL ENGINEERS
5755 Oberlin Drive, Suite #102
San Diego, CA 92121
Tel: (858) 642-0800
Fax: (858) 642-0802
Consultant

REGISTERED PROFESSIONAL ENGINEER
MAX PAJOUHESH
M27488
EXP. 06/30/21
MECHANICAL
STATE OF CALIFORNIA
Engineer

studioWC
ARCHITECTURE + ENGINEERING
515 Encinitas Blvd, Ste 201, Encinitas, California 92024
Telephone: (760) 634-8800 Fax: (760) 452-7341

LICENSED ARCHITECT
ROBERT O. WEBB A.I.A.
C-28036
OCTOBER 31, 2021
STATE OF CALIFORNIA

CHET F. HARRITT ELEM. SCHOOL
LRC & CLASSROOM ADDITION
SANTEE SCHOOL DISTRICT

PLUMBING SITE PLAN - GAS

Drawn: RA
Checked: MP
Date:
Job:

P1.1

SPECIAL NOTES

CURVATURE SHAPE OF THE BUILDING REQUIRES SPECIAL ATTENTION TO BE PAID TO MEANS, METHODS AND REQUIRED FITTINGS AND FLEX JOINT THAT IS REQUIRED TO PREVENT PIPES DISPLACEMENT CAUSING THE PIPES PULL OUT OF SUPPORTS. MINIMUM REQUIREMENTS ARE:

1. **GAS PIPING**: PROVIDE METRALOOP EXPANSION JOINT WITH SEISMIC BREAKAWAY HANGER. INSTALL AT THE REQUIRED ANGLE ALONG THE GAS LINE TO ALLOW FOR REQUIRED CHANGE OF DIRECTION. ANGLE, AND QUANTITY SHALL BE FIELD VERIFIED AND PROVIDED AS REQUIRED. FIELD FABRICATED BENDS SHALL NOT BE UTILIZED. STRAIGHT CONNECTORS SHALL NOT BE INSTALLED, IT WILL CAUSE BENT OR KINKED. VICTAULIC ELBOWS SHALL BE UTILIZED FOR REQUIRED BENDS. PROVIDE SHOP DRAWINGS.

2. **WATER PIPING:** PROVIDE UPC LISTED COPPER METRALOOP EXPANSION JOINT WITH A SEISMIC BREAKAWAY HANGER. INSTALLED AT THE REQUIRED ANGLE ALONG THE WATER LINE TO ALLOW FOR THE REQUIRED CHANGE OF DIRECTION. ANGLE, AND QUANTITY SHALL BE FIELD VERIFIED AND PROVIDED AS REQUIRED. FIELD FABRICATED BENDS SHALL NOT BE UTILIZED. STRAIGHT CONNECTOR SHALL NOT BE INSTALLED, IT WILL CAUSE BENT OR KINKED. VICTAULIC ELBOWS SHALL BE UTILIZED FOR THE REQUIRED BENDS. PROVIDE SHOP DRAWINGS.

DCW DEMAND (2016 CPC, TABLE A-103.1)

FIXTURE	QUANTITY	F.U.	TOTAL F.U.
WATER CLOSETS	5	5	25
LAVATORY	4	1	4
URINAL	2	4	8
CLASSROOM SINKS	15	2	30
DRINKING FOUNTAIN	2	0.5	1
HOSE BIBB	1	2.5	2.5
HOSE BIBB each additional	16	1	16
DISH WASHER	1	1.5	1.5
EYE WASH	2	2	4
EEW/ SHOWER	1	4	4
TOTAL			96

FROM APPENDIX "A" CHART A-3 : 96 F.U. = 66 GPM
FROM CHART A-5 AT 4 PSI FRICTION LOSS / 100 FOOT LENGTH,
REQUIRED PIPE SIZE: 2"

PLUMBING FLOOR PLAN (WATER AND GAS) | 1/8" = 1'-0" | 1

WALL LEGEND

NEW WALL

NEW RATED WALL

KEY NOTES

1. 2" DCW POINT OF CONNECTION BETWEEN CIVIL AND PLUMBING. FIELD VERIFY EXACT POINT OF CONNECTION.
2. DWC RISER MOUNTED ON THE WALL INSIDE A PLUMBING CHASE. PROVIDE SHUT-OFF AND PRESSURE REGULATOR ASSEMBLY WITH ACCESS DOOR PANEL. COORDINATE WITH ARCHITECT OF RECORD FOR EXACT LOCATION OF ACCESS DOOR PANEL.
3. DCW ABOVE THE CEILING.
4. 3/4" DCW AND DHW PIPE DOWN IN WALL TO BELOW THE GROUND IN A TRENCH. RISE PIPES INSIDE THE ISLAND CABINET TO CONNECT TO FIXTURES.
5. 3/4" DCW UP THRU ROOF TO CONNECT TO HOSE BIBB. FOR CONTINUATION SEE ROOF PLAN.
6. 3/4" DCW DOWN IN WALL TO CONNECT TO HOSE BIBB.
7. GAS PIPE UP THRU ROOF TO CONNECT TO AC UNITS ON THE ROOF. FOR CONTINUATION SEE P4.1.
8. INSTALL MIXING VALVE BELOW THE COUNTER TO PROVICE TEMPER WATER FOR EEW-2. FOR MIXING VALVE INFORMATION SEE EEW-2 DESCRIPTION IN PLUMBING FIXTURE SCHEDULE.
9. 1" MEDIUM PRESSURE GAS BELOW GROUND. FOR CONTINUATION, SEE SITE PLAN P1.1.
10. PROVIDE MPG SHUT-OFF VALVE INSIDE A YARD BOX. FIELD VERIFY EXACT POINT OF CONNECTION. YARD BOX SHALL BE "JENSEN PRECAST" CONCRETE OR SIMILLAR. YARD BOX COVER SHALL BE CAST IRON WITH MARKED UTILITY NAME "GAS" AND RATED FOR HIGH TRAFFIC.
11. 1" MEDIUM PRESSURE GAS FROM BELOW GROUND RISE UP OUTSIDE THE BLDG. TO MISS BLDG. FOOTING AND IN WALL TO ABOVE THE CEILING.
12. 1" MEDIUM PRESSURE GAS ABOVE CEILING AND UP THRU ROOF. FOR CONTINUATION SEE P4.1.
13. 2" GAS DOWN THRU ROOF FROM GAS PRESSURE REGULATOR. FOR CONTINUATION SEE P4.1.
14. RISE GAS AND DCW PIPE TO ABOVE HIGHER CEILING.
15. GAS PIPE ABOVE THE CEILING. PIPE SHALL BE SUPPORTED AND SEISMICALLY BRACED PER DETAIL 16 & 17/P5.1.
16. 1/2" DCW DOWN IN WALL TO CONNECT TO TRAP PRIMER.
17. COORDINATE WITH FIRE PROTECTION CONTRACTOR FOR EXACT LOCATION OF FLOOR SINK AND FIRE RISER.
18. INSTALL CLAY TRAP BELOW THE SINK. MAINTAIN ADA CLEARANCE REQUIREMENTS.
19. SEE SPECIAL NOTE #1 ON THIS SHEET.
20. SEE SPECIAL NOTE #2 ON THIS SHEET.
21. DCW AND GAS PIPE SHUT-OFF VALVE ABOVE THE T-BAR CEILING.
22. REFER TO 4/P5.2 FOR PIPE THRU FIRE RATE WALL DETAIL.
23. PROVIDE SHUT-OFF VALVE SIGN ON THE WALL PER CPC 1210.11.2 REFER TO ARCHITECTURAL DRAWING FOR EXACT LOCATION.

GENERAL NOTES

1. FIELD VERIFY EXACT POINT OF CONNECTION. POINT OF CONNECTION SHALL BE BETWEEN PLUMBING AND CIVIL. PRIOR TO CONSTRUCTION COORDINATE AND CONFIRM ALL UTILITIES POC AND INVERT ELEVATIONS WITH CIVIL. PROVIDE SHOP DRAWING THAT SHALL INCLUDE, VERIFICATION AND COORDINATION WITH CIVIL.
2. FOR PIPE SIZES AND PLUMBING FIXTURES REFER TO PLUMBING SCHEDULE, SHEET P0.2.
3. PROVIDE ACCESS PANEL FOR SHUT-OFF VALVES. COORDINATE WITH ARCHITECT.
4. ALL DHW AND DHWR SHALL BE INSULATED INSIDE THE BUILDING. INCLUDING IN THE WALL.
5. PROVIDE AND INSTALL P-TRAP COVERS FOR ALL LAVATORIES AND SINKS WITH BURNING CHARACTERISTICS AIN COMPLIANCE WITH ASTM D633 "PROFLOW" MODEL #PF202WH OR EQUAL.
6. ALL WATER SUPPLY PIPES ACCESSIBLE UNDER FIXTURES SHALL BE INSULATED OR COVERED PER 2016 CBC 11B-606.5.
7. COORDINATE WITH THE ARCHITECT OF RECORD FOR EXACT LOCATION AND ELEVATION OF HOSE BIBS, TRAP PRIMERS AND WATER HAMMER ARRESTOR. PROVIDE SHOP DRAWINGS.
8. COORDINATE EXACT LOCATION OF ALL GAS PIPE RISERS WITH MECHANICAL CONTRACTOR AND EQUIPMENT PROCURED.
9. ENSURE THAT THERE IS NOT ANY EXPOSE PIPE IN THE SPACE. PRIOR TO INSTALLATION. PROVIDE SHOP DRAWINGS FOR CONFIRMATION.
10. ANY ITEMS REQUIRING CLARIFICATION SHALL BE BROUGHT TO THE ATTENTION OF THE ARCHITECT OF RECORD IN SUFFICIENT TIME TO BE INCORPORATED INTO THE BID DOCUMENTS.
11. FOR GAS PIPE ISOMETRIC DIAGRAM SEE P-4.2.
12. PRIOR TO CONSTRUCTION COORDINATE AND CONFIRM ALL UTILITES POINT OF CONNECTIONS AND INVERT ELEVATIONS WITH CIVIL. SHOP DRAWINGS SHALL INCLUDE VERIFICATION AND COORDINATION WITH CIVIL.

IDENTIFICATION STAMP
DIV. OF THE STATE ARCHITECT
APP. 04-118693 INC:
REVIEWED FOR
SS ☑ FLS ☑ ACS ☑
DATE: 03.13.2020

Revision / Date

PMPE CONSULTANTS MECHANICAL ENGINEERS
5755 Oberlin Drive, Suite #102
San Diego, CA 92121
Tel: (858) 642-03800
Fax: (858) 642-03802
Consultant

REGISTERED PROFESSIONAL ENGINEER
MAX PAJOOHEH
M27488
EXP. 06/30/21
MECHANICAL
STATE OF CALIFORNIA
Engineer

studioWC
ARCHITECTURE + ENGINEERING
515 Encinitas Blvd, Ste 201 Encinitas, California 92024
Telephone: (760) 634-8800 Fax: (760) 452-7341

LICENSED ARCHITECT
ROBERT O. WEBB
C-28036
OCTOBER 31, 2021
STATE OF CALIFORNIA

CHET F. HARRITT ELEM. SCHOOL
LRC & CLASSROOM ADDITION
SANTEE SCHOOL DISTRICT

PLUMBING FLOOR PLAN (WATER & GAS)

Drawn: MM,RA
Checked: MP
Date:
Job:

P2.1

SPECIAL NOTES

CURVATURE SHAPE OF THE BUILDING REQUIRES SPECIAL ATTENTION TO BE PAID TO MEANS, METHODS AND REQUIRED FITTINGS FOR UNDERGROUND PIPING TO PREVENT STRESS ON THE PIPE JOINTS AND WHERE BRANCHES CONNECT TO MAIN. MINIMUM REQUIREMENTS ARE:

BRANCHES CONNECTING TO MAIN SHALL BE STANDARD FITTING SUCH AS WYE 45. CHANGE OF DIRECTION ALONG THE MAIN PIPE SHALL BE MADE USING STANDARD FITTING SUCH AS 1/16 (OR AS REQUIRED) AT LOCATIONS REQUIRED. ANGLE AND QUANTITY SHALL BE FIELD VERIFIED AND PROVIDE AS REQUIRED. FIELD FABRICATED BENDS SHALL NOT BE UTILIZED.

ABOVE REQUIREMENTS MIGHT RESULT IN ADJUSTING LOCATION OF THE UNDERGROUND PIPES. ADJUSTMENTS SHALL BE MINIMIZED TO MATCH THE DESIGN INTENT AS CLOSE AS POSSIBLE. COORDINATE WITH STRUCTURAL FOOTINGS AND PROVIDE SHOP DRAWINGS.

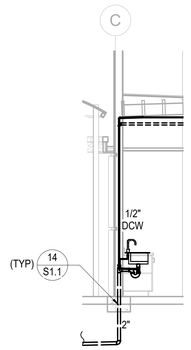

WASTE PIPE THRU FOOTING | 1/4" = 1'-0" | Detail 2

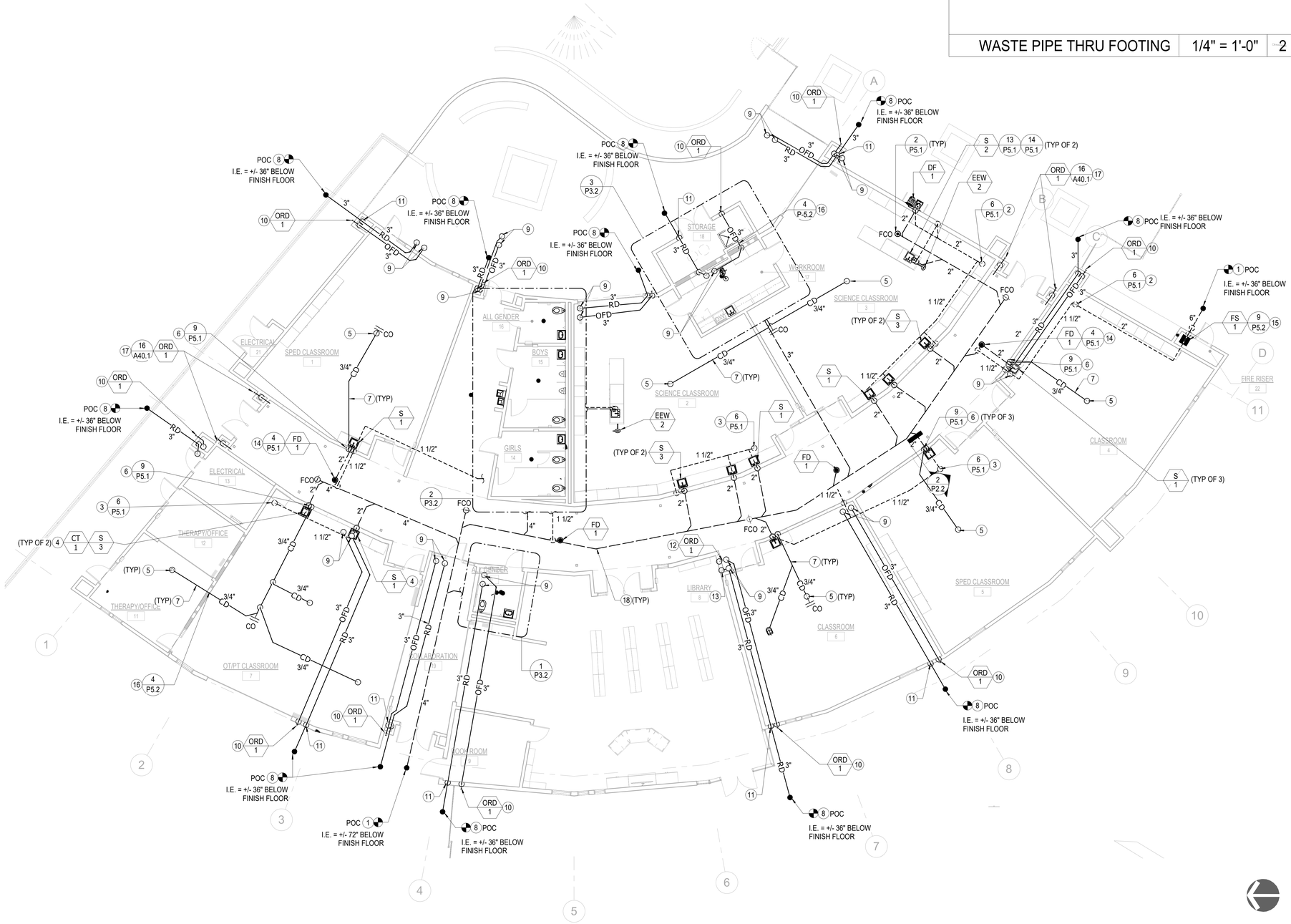

PLUMBING FLOOR PLAN (WASTE, VENT & ROOF DRAINAGE) | 1/8" = 1'-0" | 1

WALL LEGEND

NEW WALL

NEW RATED WALL

KEY NOTES

1. 4" WASTE POINT OF CONNECTION BETWEEN PLUMBING AND CIVIL ENGINEER. FIELD VERIFY EXACT POINT OF CONNECTION. PROVIDE 2-WAY CLEAN OUT TO GRADE AT POC.
2. 2" VTR. SHALL BE A MINIMUM OF 10 FEET A-WAY FROM AC UNITS OUTSIDE AIR INTAKE. COORDINATE EXACT LOCATION WITH MECHANICAL. ADJUST LOCATION AS NECESSARY.
3. 1-1/2" VTR. SHALL BE A MINIMUM OF 10 FEET A-WAY FROM AC UNITS OUTSIDE AIR INTAKE. COORDINATE EXACT LOCATION WITH MECHANICAL. ADJUST LOCATION AS NECESSARY.
4. INSTALL CLAY TRAP BELOW THE SINK. MAINTAIN ADA CLEARANCE REQUIREMENTS.
5. 3/4" CONDENSATE DRAIN UP THRU ROOF. FOR CONTINUATION SEE P4.1.
6. CONDENSATE DRAIN DOWN IN WALL TO CONNECT TO P-TRAP OF CLASSROOM SINK.
7. CONDENSATE DRAIN ABOVE THE CEILING. CD PIPE INSIDE THE BLDG. SHALL BE COPPER, INSULATED AND SHALL SLOPE AT 1/4" PER LINEAR FOOT.
8. 3" ROOF DRAIN POINT OF CONNECTION BETWEEN PLUMBING AND CIVIL. PROVIDE 2-WAY CLEAN OUT AT POC. FIELD VERIFY EXACT POINT OF CONNECTION AND INVERT ELEVATION.
9. 3" ROOF DRAIN AND OVERFLOW DRAIN UP THRU ROOF. FOR CONTINUATION SEE ROOF PLAN P4.1.
10. 3" OVER FLOW DRAIN DOWN IN CHASE/WALL. STUB OUT 18" ABOVE FINISH FLOOR.
11. 3" ROOF DRAIN DOWN IN CHASE/WALL TO BELOW THE GROUND. PROVIDE SLEEVE THRU FOOTING. REFER TO STRUCTURAL DETAIL 14/S1.1.
12. 3" OVERFLOW DRAIN DOWN IN WALL TO SPILL INTO LOWER ROOF. LOCATE OVERFLOW FIXTURE 18"ABOVE LOWER ROOF.
13. 3" ROOF DRAIN DOWN IN WALL TO CONNECT TO LOWER ROOF DRAIN.
14. INDIRECT WASTER. FLOOR DRAIN SHALL BE PRIMED BY CLASSROOM SINK.
15. COORDINATE WITH FIRE PROTECTION ENGINEER FOR EXACT LOCATION OF FLOOR SINK AND FIRE RISER.
16. REFER TO 4/P5.2 FOR PIPE THRU FIRE RATE WALL DETAIL.
17. 3" DRAIN PIPE CONNECTING TO BOTTOM OF GUTTER SOFFIT. FOR ADDITIONAL INFORMATION REFER TO ARCHITECTURAL DRAWINGS. ROUTE DRAIN PIPE DOWN IN CHASE. STUB OUT 18" ABOVE FINISH FLOOR. FOR ADDITIONAL INFORMATION, SEE ARCHITECTURAL DETAIL 16/A40.1.
18. SEE SPECIAL NOTE ON THIS DRAWING.

GENERAL NOTES

1. FIELD VERIFY EXACT POINT OF CONNECTION AND COORDINATE WITH CIVIL. PRIOR TO CONSTRUCTION, COORDINATE AND CONFIRM ALL UTILITIES POINT OF CONNECTIONS AND INVERT ELEVATIONS WITH CIVIL. SHOP DRAWINGS SHALL INCLUDE VERIFICATION AND COORDINATION WITH CIVIL.
2. FOR PIPE SIZES AND PLUMBING FIXTURES REFER TO PLUMBING SCHEDULE, SHEET P0.2.
3. WASTE PIPE SHALL SLOPE AT MINIMUM 1/4" PER LINEAR FOOT.
4. MAINTAIN A MINIMUM OF 10 FEET BETWEEN AC UNITS OUTSIDE AIR INTAKE AND PLUMBING VENTS. COORDINATE WITH MECHANICAL CONTRACTOR AND ADJUST LOCATION OF VTRS AS REQUIRED.
5. COORDINATE EXACT LOCATION OF ALL CD PIPE RISERS WITH MECHANICAL CONTRACTOR AND EQUIPMENT PROCURED.
6. ALL CONDENSATE DRAIN PIPING INSIDE THE BUILDING SHALL BE COPPER AND INSULATED. SLOPE PIPE A MINIMUM OF 1/4" PER LINEAR FOOT. INSULATION SHALL BE CONTINUOUSLY THRU THE ROOF, THRU WALLS, INSIDE THE WALL'S AND CHASES.
7. CONDENSATE DRAIN ABOVE THE CEILING SHALL NOT BE ROUTED ABOVE THE LIGHT FIXTURES.
8. ENSURE THAT ROOF DRAIN PIPES AND VENT PIPE WOULD NOT BE EXPOSED IN THE SPACE. PRIOR TO INSTALLATION PROVIDE SHOP DRAWINGS FOR CONFIRMATION.
9. PROVIDE P-TRAP COVERS FOR ALL LAVATORIES AND SINKS WITH BURNING CHARACTERISTICS AIN COMPLIANCE WITH ASTM D633 "PROFLOW" MODEL #PF202WH OR EQUAL.
10. ROOF DRAIN AND OVERFLOW DRAIN SHALL SLOPE AT 1/4" PER LINEAR FOOT. PROVIDE A CLEAN OUT AT EVERY 135 DEGREE TURN.
11. PRIOR TO CONSTRUCTION COORDINATE AND CONFIRM ALL UTILITIES POINT OF CONNECTIONS AND INVERT ELEVATIONS WITH CIVIL. SHOP DRAWINGS SHALL INCLUDE VERIFICATION AND COORDINATION WITH CIVIL.
12. ANY ITEMS REQUIRING CLARIFICATION SHALL BE BROUGHT TO THE ATTENTION OF THE ARCHITECT OF RECORD IN SUFFICIENT TIME TO BE INCORPORATED INTO THE BID DOCUMENTS.

IDENTIFICATION STAMP
DIV. OF THE STATE ARCHITECT
APP. 04-118693 INC:
REVIEWED FOR
SS ☑ FLS ☑ ACS ☑
DATE: 03.13.2020

Revision | Date

PMPE CONSULTANTS MECHANICAL ENGINEERS
5755 Oberlin Drive, Suite #102
San Diego, CA 92121
Tel: (858) 642-0800
Fax: (858) 642-0802
Consultant

REGISTERED PROFESSIONAL ENGINEER
MAX PAJOUHESH
M27488
EXP. 06/30/21
MECHANICAL
STATE OF CALIFORNIA
Engineer

studiowc
ARCHITECTURE + ENGINEERING
515 Encinitas Blvd, Ste 201, Encinitas, California 92024
Telephone: (760) 634-8800 Fax: (760)452-7341

LICENSED ARCHITECT
ROBERT O. WEBB
C-28036
OCTOBER 31, 2021
STATE OF CALIFORNIA

CHET F. HARRITT ELEM. SCHOOL
LRC & CLASSROOM ADDITION
SANTEE SCHOOL DISTRICT

PLUMBING FLOOR PLAN (WASTE, VENT & ROOF DRAINAGE)

Drawn: MM,RA
Checked: MP
Date:
Job:

P2.2

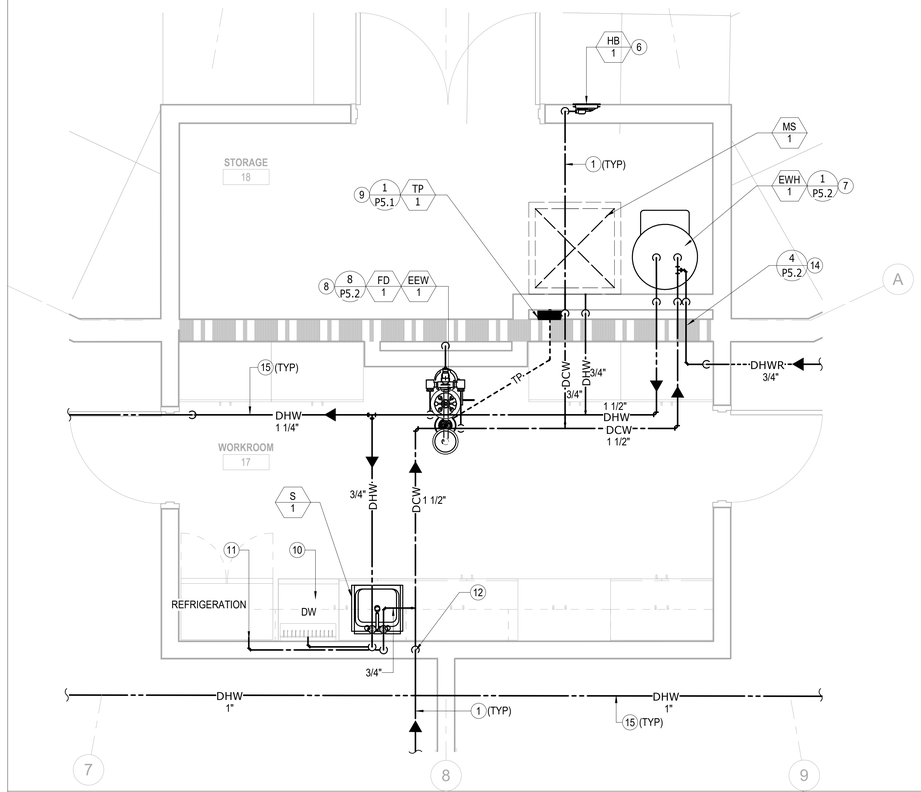

ENLARGED WORKROOM & STORAGE PLUMBING FLOOR PLAN (WATER & GAS) | 1/2" = 1'-0" | 3

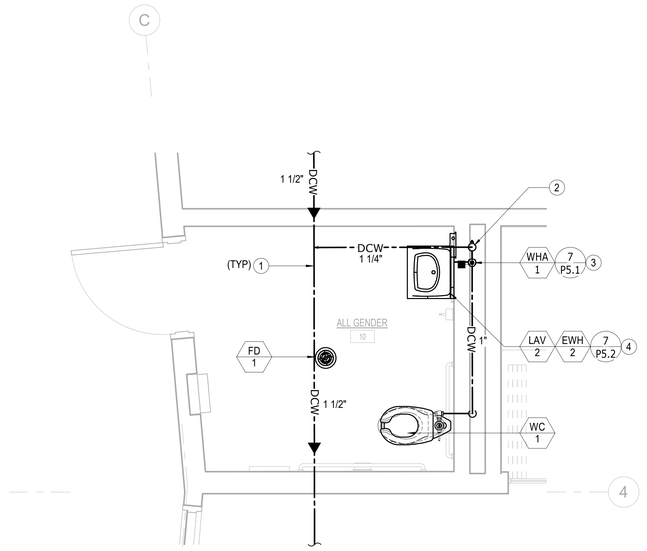

ENLARGED STAFF RESTROOM PLUMBING PLAN (WATER & GAS) | 1/2" = 1'-0" | 1

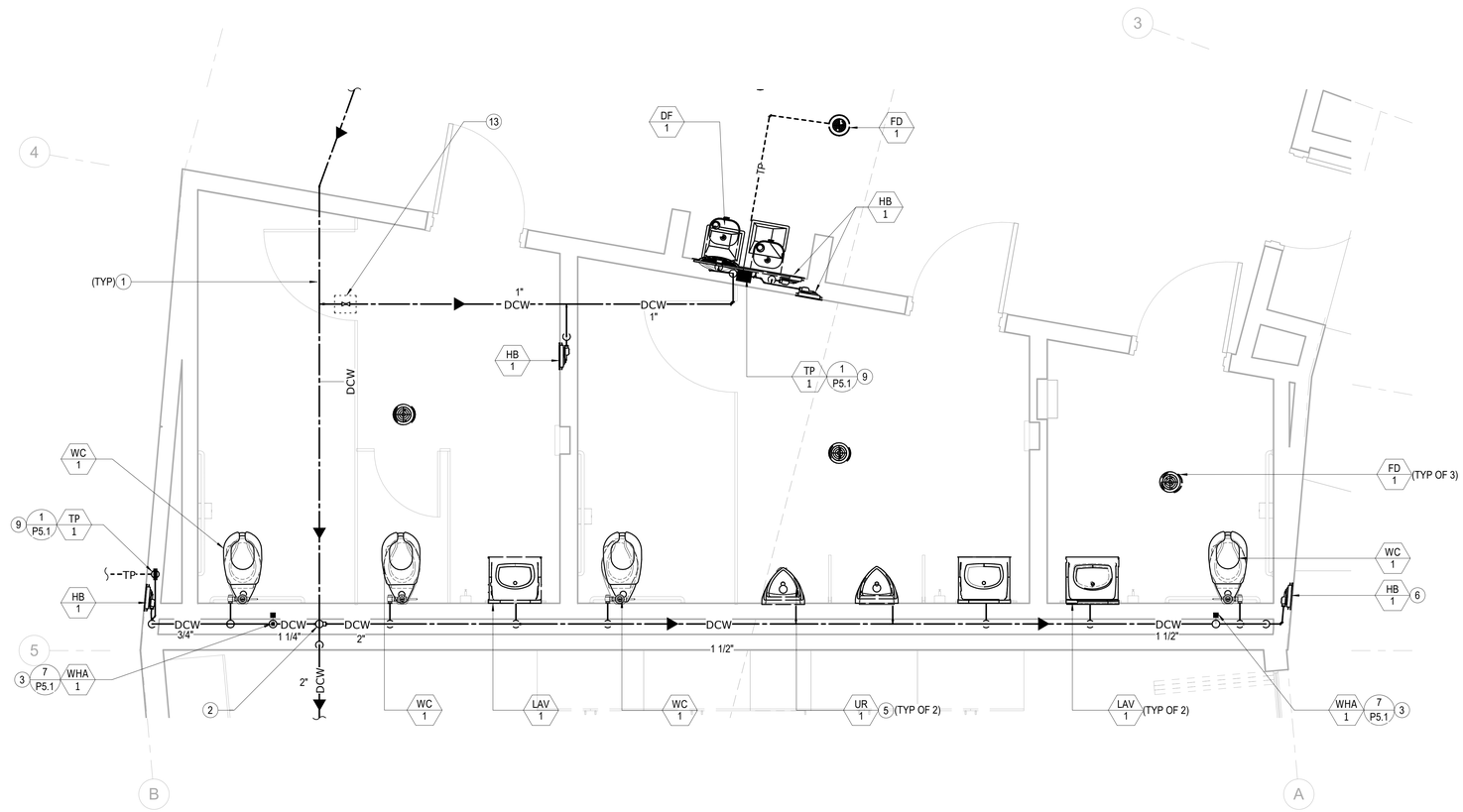

ENLARGED BOYS & GIRLS RR PLUMBING PLAN (WATER & GAS) | 1/2" = 1'-0" | 2

WALL LEGEND

NEW WALL

NEW RATED WALL

KEY NOTES

1. DCW ABOVE THE CEILING.
2. DCW DOWN IN WALL TO CONNECT TO PLUMBING FIXURES. PROVIDE SHUT-OFF VALVE ON PIPE RISER WITH ACCESS DOOR PANEL. COORDINATE EXACT LOCATION WITH ARCHITECT OF RECORD.
3. PROVIDE ACCESS DOOR FOR WATER HAMMER. COORDINATE WITH ARCHITECT OF RECORD FOR EXACT LOCATION.
4. INSTALL INSTANTANEOUS WATER HEATER BELOW THE LAVATORY AND AWAY FROM ADA CLEARANCES.
5. PROVIDE WALL CLEAN OUT ABOVE THE URINAL.
6. 3/4" DCW DOWN IN WALL TO CONNECT TO HOSE BIBB.
7. SET DHW TEMPERATURE AT WATER HEATER AT 105° F.
8. PROVIDE MIXING VALVE FOR EMERGENCY EYEWASH/SHOWER EXPOSED MOUNTED ON THE WALL NEXT TO THE EMERGENCY FIXTURE. FOR MIXING VALVE INFORMATION, SEE EEW-1 DESCRIPTION IN PLUMBING FIXTURE SCHEDULE.
9. BRANCH 1/2" DCW TO CONNECT TO TRAP PRIMER. PROVIDE ACCESS DOOR PANEL AND COORDINATE WITH ARCHITECT OF RECORD FOR EXACT LOCATION OF TRAP PRIMER AND ACCESS DOOR PANEL.
10. EXTEND 3/4" DCW AND DHW PIPE TO CONNECT TO DISHWASHER. DISHWASHER PROVIDED BY OWNER AND INSTALLED BY CONTRACTOR. SEE ARCHITECTURAL DRAWINGS FOR ADDITIONAL INFORMATION. PROVIDE SHUT-OFF VALVES.
11. BRANCH 1/2" DCW TO CONNECT TO REFRIGERATOR. STUB OUT PIPES THROUGH WALL AND PROVIDE CHROME PLATE FLUSH WITH WALL SURFACE AND SHUTOFF VALVE. REFRIGERATOR PROVIDED BY OWNER, FOR MORE INFORMATION SEE ARCHITECTURAL DRAWINGS. PROVIDE SHUT-OFF VALVE.
12. DCW DOWN IN WALL TO ABOVE THE CEILING OF LOWER ROOF.
13. DCW SHUTOFF VALVE ABOVE THE CEILING. PROVIDE ACCESS PANEL. COORDINATE WITH ARCHITECT FOR EXACT LOCATION.
14. REFER TO 4/P5.2 FOR PIPE THRU FIRE RATE WALL DETAIL.
15. DHW ABOVE THE CEILING.

GENERAL NOTES

1. FOR BRANCH PIPE SIZES AND PLUMBING FIXTURES REFER TO PLUMBING SCHEDULE P0.2.
2. ALL DHW AND DHWR PIPES SHALL BE INSULATED, INCLUDING IN THE WALLS.
3. PROVIDE SHUT-OFF VALVES WITH ACCESS DOOR.
4. PROVIDE P-TRAP COVERS FOR ALL LAVATORIES AND SINKS WITH BURNING CHARACTERISTICS IN COMPLIANCE WITH ASTM D633 " PROFLOW" MODEL PF202WH OR EQUAL.
5. ALL WATER SUPPLY PIPES ACCESSIBLE UNDER THE FIXTURES SHALL BE INSULATED OR COVERED PER 2016 CBC 11B-606.5.
6. COORDINATE WITH ARCHITECT OF RECORD FOR EXACT LOCATION AND ELEVATION OF HOSE BIBS, TRAP PRIMERS AND WATER HAMMERS. PROVIDE SHOP DRAWINGS.
7. FOR DCW AND WASTE & VENT ISOMETRIC DIAGRAMS, SEE P4.3.
8. DCW PIPE WITHIN 5 FEET OF WATER HEATER SHALL BE INSULATED.
9. ENSURE THERE IS NO PIPE EXPOSED IN THE SPACE. PRIOR TO INSTALLATION, PROVIDE SHOP DRAWINGS.
10. ANY ITEMS REQUIRING CLARIFICATION SHALL BE BROUGHT TO THE ATTENTION OF ARCHITECT OF RECORD IN SUFFICIENT TIME TO INCORPORATE INTO THE BID DOCUMENTS.

IDENTIFICATION STAMP
DIV. OF THE STATE ARCHITECT
APP. 04-118693 INC:
REVIEWED FOR
SS ☑ FLS ☑ ACS ☑
DATE: 03.13.2020

Revison | Date

PMPE CONSULTANTS MECHANICAL ENGINEERS
5755 Oberlin Drive, Suite #102
San Diego, CA 92121
Tel: (858) 642-0800
Fax: (858) 642-0802
Consultant

REGISTERED PROFESSIONAL ENGINEER
MAX PAJOOMEH
M27488
EXP. 06/30/21
MECHANICAL
STATE OF CALIFORNIA
Engineer

studiowc
ARCHITECTURE + ENGINEERING
515 Encinitas Blvd, Ste 201, Encinitas, California 92024
Telephone: (760) 634-8880 Fax: (760) 452-7341

LICENSED ARCHITECT
ROBERT O. WEBB
C-28036
OCTOBER 31, 2021
STATE OF CALIFORNIA

CHET F. HARRITT ELEM. SCHOOL
LRC & CLASSROOM ADDITION
SANTEE SCHOOL DISTRICT

ENLARGED PLUMBING PLANS (WATER & GAS)

Drawn: RA
Checked: MP
Date:
Job:

P3.1

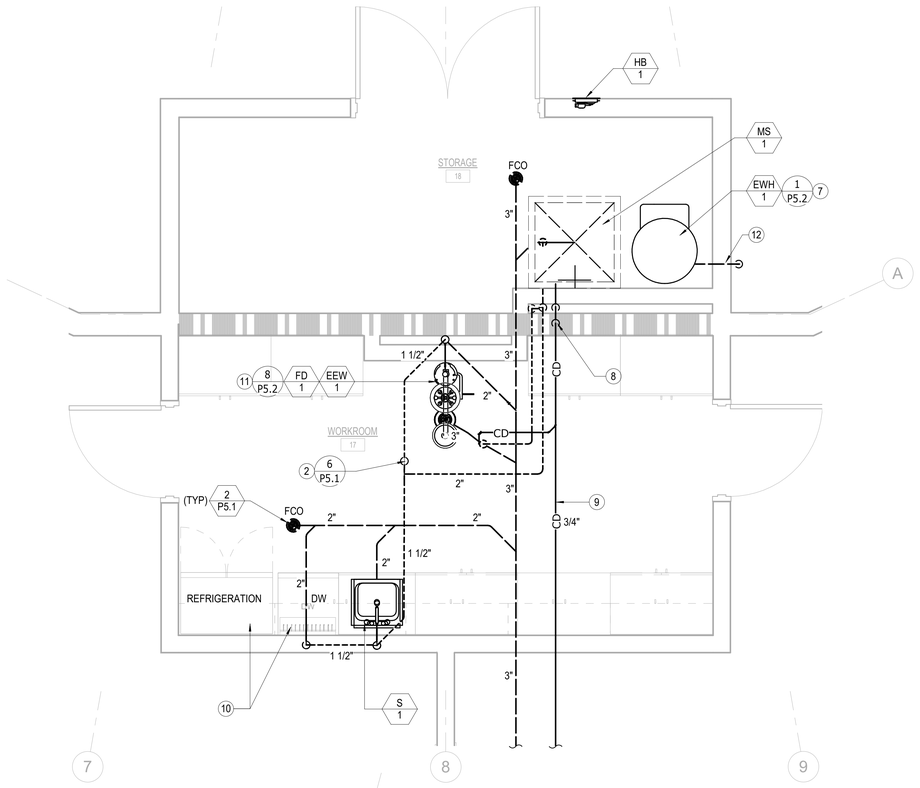

ENLARGED WORKROOM & STORAGE PLUMBING FLOOR PLAN (WASTE & VENT) | 1/2" = 1'-0" | 3

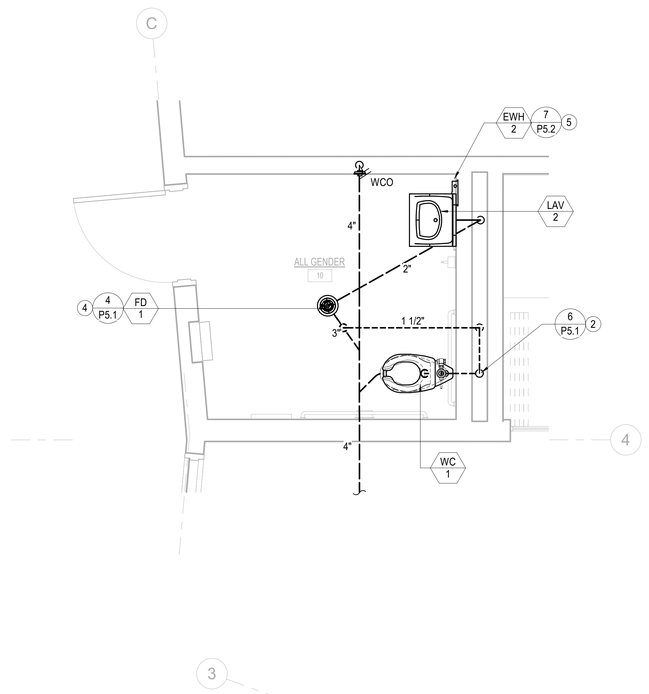

ENLARGED STAFF RESTROOM PLUMBING PLAN (WASTE & VENT) | 1/2" = 1'-0" | 1

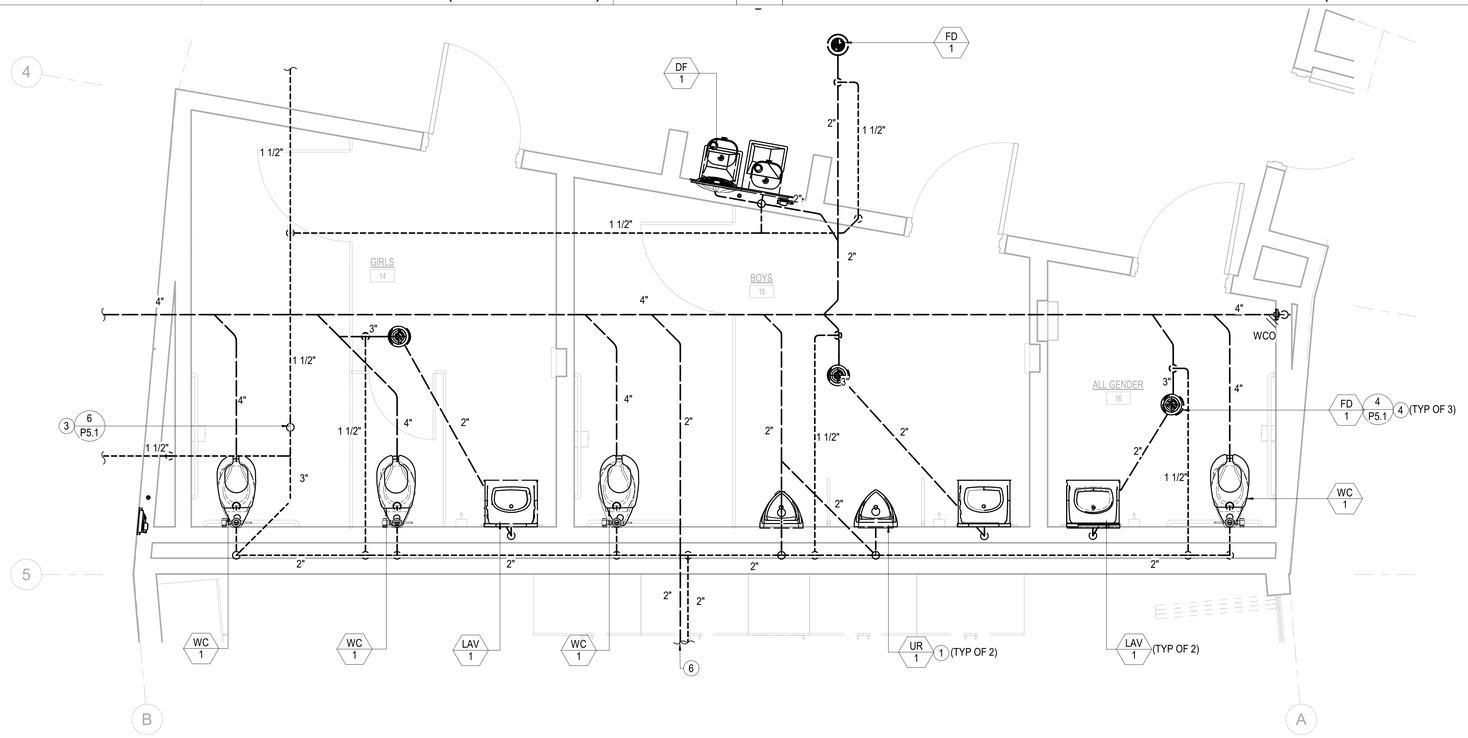

ENLARGED BOYS & GIRLS RR PLUMBING PLAN (WASTE & VENT) | 1/2" = 1'-0" | 2

WALL LEGEND

NEW WALL

NEW RATED WALL

KEY NOTES

1. PROVIDE WALL CLEAN OUT WITH CROME PLATE ABOVE THE URINAL.
2. 2" VTR. SHALL BE A MINIMUM OF 10 FEET AWAY FROM ALL UNITS OUTSIDE AIR INTAKE. COORDINATE EXACT LOCATION WITH MECHANICAL. ADJUST LOCATION AS NECESSARY.
3. 3" VTR. SHALL BE A MINIMUM OF 10 FEET AWAY FROM ALL UNITS OUTSIDE AIR INTAKE. COORDINATE EXACT LOCATION WITH MECHANICAL. ADJUST LOCATION AS NECESSARY.
4. INDIRECT DRAIN. FLOOR DRAIN SHALL BE PRIMED BY THE LAVATORY OR SINK.
5. INSTALL INSTANTANEOUS WATER HEATER BELOW THE LAVATORY AND AWAY FROM ADA CLEARANCES.
6. 2" WASTE AND VENT BELOW THE GROUND FROM ISLAND SINK. SEE P2.2 FOR CONTINUATION.
7. ELECTRIC WATER HEATER T&P SHALL SPILL DOWN INTO MOP SINK.
8. 3/4" CONDENSATE DRAIN DOWN IN WALL TO SPILL INTO MOP SINK.
9. CONDENSATE DRAIN ABOVE THE CEILING. SLOPE CONDENSATE DRAIN AT 1/4" PER LINEAR FOOT. ALL PIPE INSIDE THE BLDG. SHALL BE INSULATED.
10. APPLIANCES SHALL BE PROVIDED BY OWNER AND INSTALLED BY CONTRACTOR. FOR ADDITIONAL INFORMATION, SEE ARCHITECTURAL DRAWINGS.
11. EMERGENCY EYE WASH/SHOWER SHALL BE CONNECTED TO THE WASTE PIPE SYSTEM. WASTE FROM EMERGENCY EYE WASH/SHOWER SHALL NOT SPILL ON THE GROUND.
12. ELECTRIC WATER HEATER DRAIN FROM PAN TO ELBOW DOWN TO DISCHARGE 6" ABOVE GROUND OUTSIDE THE BUILDING.

GENERAL NOTES

1. FOR BRANCH PIPE SIZES AND PLUMBING FIXTURES REFER TO PLUMBING SCHEDULE P0.2.
2. PROVIDE P-TRAP COVERS FOR ALL LAVATORIES AND SINKS WITH BURNING CHARACTERISTICS IN COMPLIANCE WITH ASTM D633 " PROFLOW" MODEL PF202WH OR EQUAL.
3. WASTE PIPE SHALL SLOPE AT MINIMUM 1/4" PER LINEAR FOOT.
4. MAINTAIN A MINIMUM OF 10 FEET BETWEEN AC UNITS OUTSIDE AIR INTAKE AND PLUMBING VENTS. COORDINATE WITH MECHANICAL CONTRACTOR, ADJUST LOCATION AS REQUIRED.
5. ALL CONDENSATE DRAIN PIPING INSIDE THE BUILDING SHALL BE COPPER AND INSULATED. SLOPE PIPE A MINIMUM OF 1/4" PER LINEAR FOOT. INSULATION SHALL BE CONTINUOUSLY THRU THE ROOF, THRU WALLS, INSIDE THE WALL'S AND CHASES.
6. CONDENSATE DRAIN ABOVE THE CEILING SHALL NOT BE ROUTED ABOVE THE LIGHT FIXTURES.
7. ENSURE THAT ROOF DRAIN PIPES AND VENT PIPE WOULD NOT BE EXPOSED IN THE SPACE. PRIOR TO INSTALLATION PROVIDE SHOP DRAWINGS FOR CONFIRMATION.
8. FOR WASTE AND VENT ISOMETRIC, SEE P4.3.
9. ANY ITEMS REQUIRING CLARIFICATION SHALL BE BROUGHT TO THE ATTENTION OF ARCHITECT OF RECORD IN SUFFICIENT TIME TO INCORPORATE INTO THE BID DOCUMENTS.

IDENTIFICATION STAMP
DIV. OF THE STATE ARCHITECT
APP. 04-118693 INC:
REVIEWED FOR
SS ☑ FLS ☑ ACS ☑
DATE: 03.13.2020

Revison | Date

PMPE CONSULTANTS MECHANICAL ENGINEERS
5755 Oberlin Drive, Suite #102
San Diego, CA 92121
Tel: (858) 642-0800
Fax: (858) 642-0802
Consultant

REGISTERED PROFESSIONAL ENGINEER
MAX PAJOUHESH
M27488
EXP. 06/30/21
MECHANICAL
STATE OF CALIFORNIA
Engineer

studioWC
ARCHITECTURE + ENGINEERING
515 Encinitas Blvd, Ste 201, Encinitas, California 92024
Telephone: (760) 634-8800 Fax: (760) 452-7341

LICENSED ARCHITECT
ROBERT O. WEBB
C-28036
OCTOBER 31, 2021
STATE OF CALIFORNIA

CHET F. HARRITT ELEM. SCHOOL
LRC & CLASSROOM ADDITION
SANTEE SCHOOL DISTRICT

ENLARGED PLUMBING PLANS (WASTE & VENT)

Drawn: RA
Checked: MP
Date:
Job:

P3.2

PLUMBING ROOF PLAN | 1/8" = 1'-0" | 1

KEY NOTES

1. 1-1/2" VENT THRU ROOF. MAINTAIN A MINIMUM OF 10 FEET BETWEEN AC UNITS OUTSIDE AIR INTAKE AND PLUMBING VENTS. COORDINATE WITH MECHANICAL CONTRACT. ADJUST VTR LOCATIONS AS REQUIRED
2. 2" VENT THRU ROOF. MAINTAIN A MINIMUM OF 10 FEET BETWEEN AC UNITS OUTSIDE AIR INTAKE AND PLUMBING VENTS. COORDINATE WITH MECHANICAL CONTRACT. ADJUST VTR LOCATIONS AS REQUIRED
3. 3/4" DCW FROM BELOW THE ROOF AND TO CONNECT TO HOSE BIBB. SEE P2.1 FOR CONTINUATION.
4. 3/4" CONDENSATE DRAIN DOWN THRU ROOF. FOR CONTINUATION SEE P2.2.
5. GAS PIPE DOWN THRU THRU ROOF. FOR CONTINUATION, SEE P2.1.
6. 1" MEDIUM PRESSURE GAS DOWN THRU ROOF FOR CONTINUATION SEE P2.1.
7. PROVIDE GAS PRESSURE REGULATOR AND SHUT-OFF VALVE ABOVE ROOF. SIZE PRESSURE REGULATOR PER BLDG. GAS LOAD. VERIFY GAS PRESSURE UPSTREAM THE REGULATOR (BEFORE THE REGULATOR) AND PROVIDE THE INFORMATION TO THE MANUFACTURER INCLUDING GAS DEMAND TO VERIFY ORIFICE VALVE AND PRESSURE SPRING MODEL NUMBER.
8. 2" GAS PIPE DOWN THRU ROOF FROM PRESSURE REGULATOR. FOR CONTINUATION SEE P2.1.
9. 4" ROOF DRAIN AND OVERFLOW DRAIN DOWN THRU ROOF . FOR CONTINUATION SEE P2.2
10. 3" VENT THRU ROOF. MAINTAIN A MINIMUM OF 10 FEET BETWEEN AC UNITS OUTSIDE AIR INTAKE AND PLUMBING VENTS. COORDINATE WITH MECHANICAL CONTRACT. ADJUST VTR LOCATIONS AS REQUIRED

GENERAL NOTES

1. MAINTAIN A MINIMUM OF 10 FEET BETWEEN AC UNITS OUTSIDE AIR INTAKE AND PLUMBING VENTS. COORDINATE WITH MECHANICAL CONTRACT. ADJUST VTR LOCATIONS AS REQUIRED
2. ALL EXPOSED CONDENSATE DRAIN PIPING SHALL BE TYPE K COPPER AND PAINTED. SLOPE CONDENSATE DRAIN LINE AT A MINIMUM OF 1/4" PER LINEAR FOOT. INSULATION SHALL BE CONTINUOUSLY THRU THE ROOF, THRU WALLS, INSIDE THE WALLS AND CHASES.
3. COORDINATE EXACT LOCATION OF ALL GAS AND CD PIPE RISERS WITH MECHANICAL CONTRACTOR AND EQUIPMENT PROCURED.
4. FOR ISOMETRIC DIAGRAM SEE P4.2.
5. ALL EXPOSED PIPING SHALL BE PAINTED. COORDINATE COLOR WITH ARCHITECT OF RECORD. COMPLY WITH SPECS.
6. PROVIDE PIPE SUPPORT SYSTEM WITH BLOCK HEIGHT AND ROD EXTENSION FOR ALL PIPING ON THE ROOF. IF PIPE EXCEEDS 12" IN HEIGHT, PIPE SUPPORT MUST BE ANCHORED TO THE ROOF STRUCTURE.
7. ANY ITEMS REQUIRING CLARIFICATION SHALL BE BROUGHT TO THE ATTENTION OF THE ARCHITECT OF RECORD IN SUFFICIENT TIME TO BE INCORPORATED INTO THE BID DOCUMENTS.

IDENTIFICATION STAMP
DIV. OF THE STATE ARCHITECT
APP. 04-118693 INC:
REVIEWED FOR
SS ☑ FLS ☑ ACS ☑
DATE: 03.13.2020

Revison | Date

PMPE CONSULTANTS MECHANICAL ENGINEERS
5755 Oberlin Drive, Suite #102
San Diego, CA 92121
Tel: (858) 642-0800
Fax: (858) 642-0802
Consultant

REGISTERED PROFESSIONAL ENGINEER
MAX PAJOUHESH
M27488
EXP. 06/30/21
MECHANICAL
STATE OF CALIFORNIA
Engineer

studioWC
ARCHITECTURE + ENGINEERING
515 Encinitas Blvd, Ste 201, Encinitas, California 92024
Telephone: (760) 634-8800 Fax: (760) 452-7341

LICENSED ARCHITECT
ROBERT C. WEBB
C-28036
OCTOBER 31, 2021
STATE OF CALIFORNIA

CHET F. HARRITT ELEM. SCHOOL
LRC & CLASSROOM ADDITION
SANTEE SCHOOL DISTRICT

PLUMBING ROOF PLAN

Drawn: MM,RA
Checked: MP
Date:
Job:

P4.1

GAS INFORMATION

LOW PRESSURE GAS
TDL: 250'-0"
GAS LOAD: 540 MBH
GAS PIPE REQ: 2"

LOW PRESSURE GAS PIPE SIZING

PER CPC 2016 TABLE 1216.2

TOTAL DEVELOP LENGHT	PIPE SIZE	GAS CAPACITY (MBH)
250'-0"	3/4"	63
250'-0"	1"	119
250'-0"	1-1/4"	244
250'-0"	1-1/2"	366
250'-0"	2"	704

KEY NOTES

1. 1" MEDIUM PRESSURE GAS BELOW GROUND. FOR CONTINUATION SEE SITE PLAN.
2. PROVIDE MEDUIM PRESSURE GAS SHUT-OFF VALVE BELOW THE GROUND IN A YARD BOX. FIELD VERIFY EXACT LOCATION.
3. MEDIUM PRESSURE GAS FROM BELOW GROUND RISE UP IN WALL TO ABOVE CEILING.
4. MEDIUM PRESSURE GAS ABOVE CEILING AND UP THRU ROOF.
5. PROVIDE GAS PRESSURE REGULATOR AND SHUT-OFF VALVE ABOVE ROOF. SIZE PRESSURE REGULATOR PER BLDG. GAS LOAD. VERIFY GAS PRESSURE UPSTREAM THE REGULATOR (BEFORE THE REGULATOR) AND PROVIDE THE INFORMATION TO THE MANUFACTURER INCLUDING GAS DEMAND TO VERIFY ORIFICE VALVE AND PRESSURE SPRING MODEL NUMBER.
6. GAS PIPE ABOVE THE CEILING. PIPE SHALL BE SUPPORTED AND SEISMICALLY BRACED. REFER TO DETAIL 16/P5.1, 17/P5.1 & 18/P5.1.
7. PROVIDE SHUT-OFF VALVE SIGN ON THE WALL PER CPC 1210.11.2 REFER TO ARCHITECTURAL DRAWING FOR EXACT LOCATION.

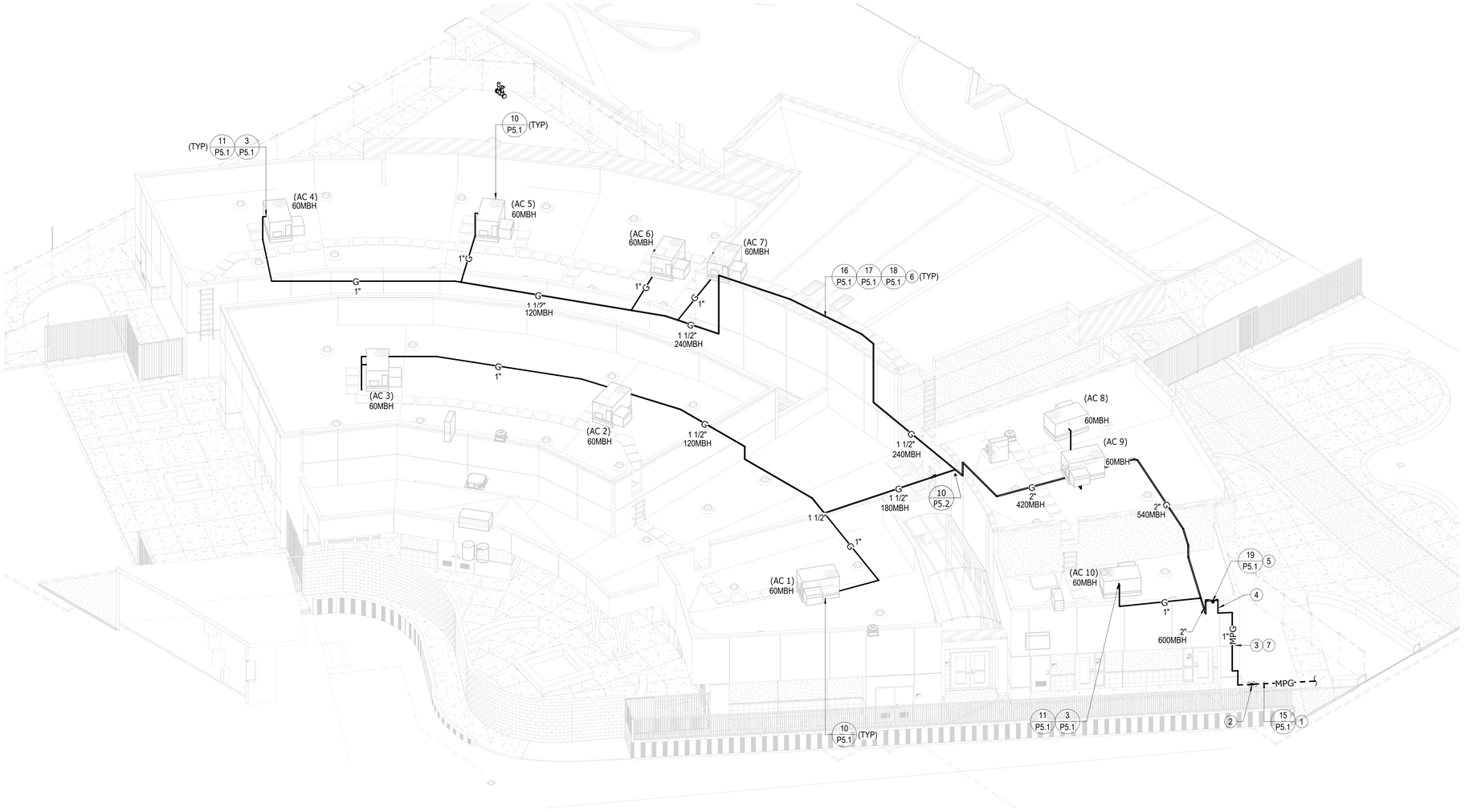

GAS ISOMETRIC DIAGRAM | NTS | 1

IDENTIFICATION STAMP
DIV. OF THE STATE ARCHITECT
APP. 04-118693 INC:
REVIEWED FOR
SS ☑ FLS ☑ ACS ☑
DATE: 03.13.2020

Revison	Date

PMPE CONSULTANTS MECHANICAL ENGINEERS
5755 Oberlin Drive, Suite #102
San Diego, CA 92121
Tel: (858) 642-0800
Fax: (858) 642-0802
Consultant

REGISTERED PROFESSIONAL ENGINEER
MAX PAJOUHESH
M27488
EXP. 06/30/21
MECHANICAL
STATE OF CALIFORNIA
Engineer

studioWC
ARCHITECTURE + ENGINEERING
515 Encinitas Blvd, Ste 201, Encinitas, California 92024
Telephone: (760) 634-8800 Fax: (760) 452-7341

LICENSED ARCHITECT
ROBERT D. WEBB
C-28036
OCTOBER 31, 2021
STATE OF CALIFORNIA

CHET F. HARRITT ELEM. SCHOOL
LRC & CLASSROOM ADDITION
SANTEE SCHOOL DISTRICT

ISOMETRIC DIAGRAM (GAS)

Drawn: MM,RA
Checked: MP
Date:
Job:

P4.2

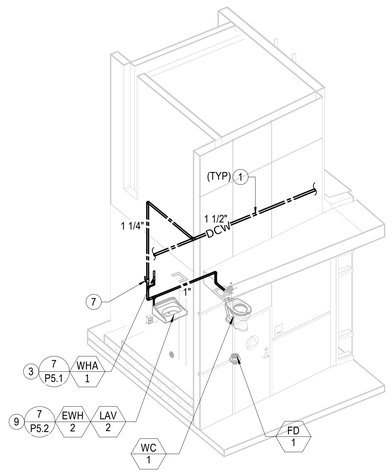

STAFF RESTROOM ISOMETRIC DIAGRAM (DCW & DHW) | NTS | 3

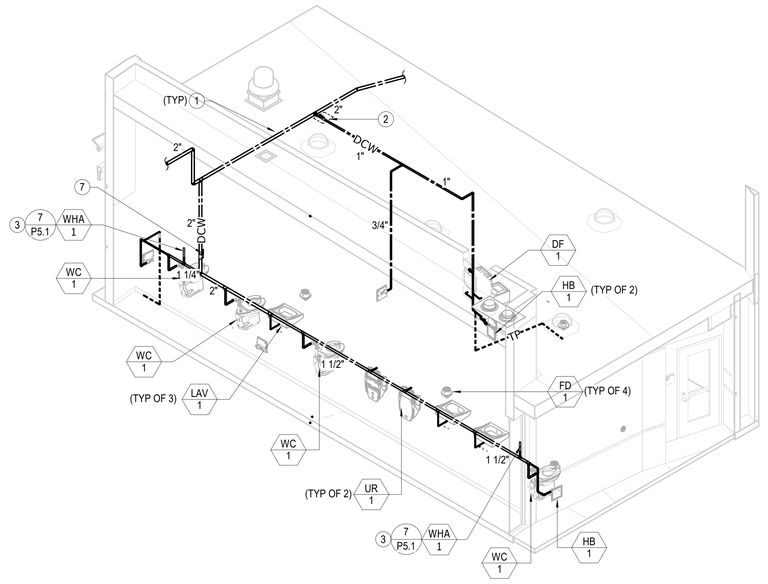

BOYS & GIRLS RR ISOMETRIC DIAGRAM (DCW & DHW) | NTS | 1

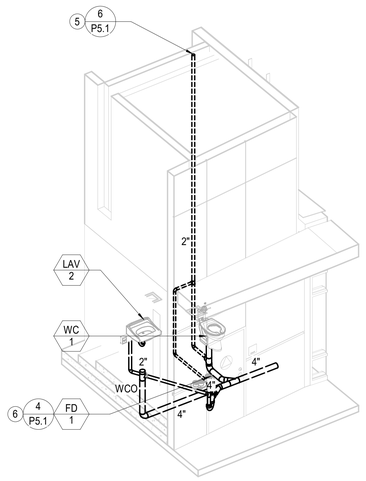

STAFF RESTROOM ISOMETRIC DIAGRAM (WASTE & VENT) | NTS | 4

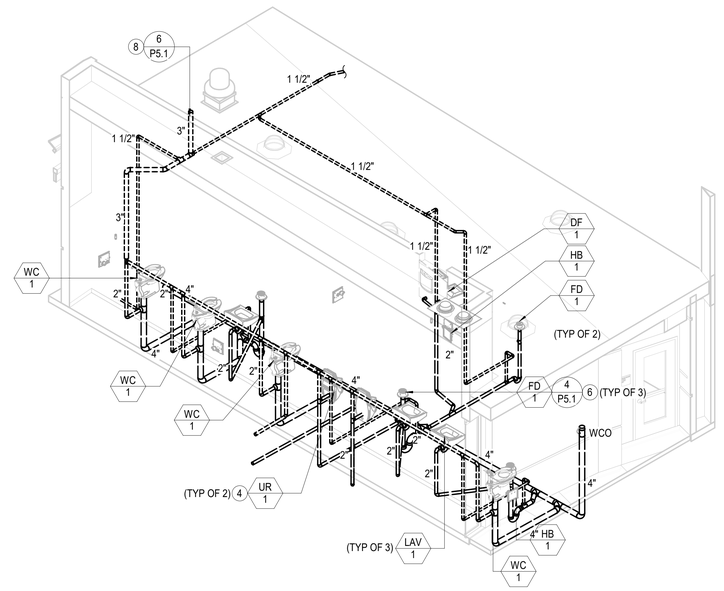

BOYS & GIRLS RR ISOMETRIC DIAGRAM (WASTE & VENT) | NTS | 2

KEY NOTES

1. DCW ABOVE THE CEILING
2. PROVIDE DCW SHUT-OFF VALVE WITH ACCESS DOOR PANEL AT CEILING. COORDINATE EXACT LOCATION WITH ARCHITECT OF RECORD.
3. PROVIDE ACCESS DOOR FOR WATER HAMMER. COORDINATE WITH ARCHITECT OF RECORD FOR EXACT LOCATION.
4. PROVIDE WALL CLEAN OUT ABOVE THE URINAL.
5. 2" VTR. SHALL BE A MINIMUM OF 10 FEET AWAY FROM ALL UNITS OUTSIDE AIR INTAKE. COORDINATE EXACT LOCATION WITH MECHANICAL. ADJUST LOCATION AS NECESSARY.
6. INDIRECT DRAIN. FLOOR DRAIN SHALL BE PRIMED BY THE LAVATORY ON SINK.
7. PROVIDE DCW SHUT-OFF VALVE ON PIPE RISER. COORDINATE EXACT LOCATION WITH ARCHITECT OF RECORD.
8. 3" VTR. SHALL BE A MINIMUM OF 10 FEET AWAY FROM ALL UNITS OUTSIDE AIR INTAKE. COORDINATE EXACT LOCATION WITH MECHANICAL. ADJUST LOCATION AS NECESSARY.
9. INSTALL INSTANTANEOUS WATER HEATER BELOW THE LAVATORY AND AWAY FROM ADA CLEARANCES.

GENERAL NOTES

1. FOR BRANCH PIPE SIZES AND PLUMBING FIXTURES REFER TO PLUMBING SCHEDULE P0.2.
2. ALL DHW AND DHWR PIPES SHALL BE INSULATED, INCLUDING IN THE WALLS.
3. PROVIDE SHUT-OFF VALVES WITH ACCESS DOOR.
4. PROVIDE P-TRAP COVERS FOR ALL LAVATORIES AND SINKS WITH BURNING CHARACTERISTICS IN COMPLIANCE WITH ASTM D633 " PROFLOW" MODEL PF202WH OR EQUAL.
5. ALL WATER SUPPLY PIPES ACCESSIBLE UNDER THE FIXTURES SHALL BE INSULATED OR COVERED PER 2016 CBC 11B-606.5.
6. COORDINATE WITH ARCHITECT OF RECORD FOR EXACT LOCATION AND ELEVATION OF HOSE BIBS.
7. WASTE PIPE SHALL SLOPE AT MINIMUM 1/4" PER LINEAR FOOT.
8. MAINTAIN A MINIMUM OF 10 FEET BETWEEN AC UNITS OUTSIDE AIR INTAKE AND PLUMBING VENTS. COORDINATE WITH MECHANICAL CONTRACTOR, ADJUST LOCATION AS REQUIRED.
9. ANY ITEMS REQUIRING CLARIFICATION SHALL BE BROUGHT TO THE ATTENTION OF ARCHITECTS OF RECORD IN SUFFICIENT TIME TO INCORPORATED INTO THE BID DOCUMENTS.

IDENTIFICATION STAMP
DIV. OF THE STATE ARCHITECT
APP. 04-118693 INC:
REVIEWED FOR
SS ☑ FLS ☑ ACS ☑
DATE: 03.13.2020

Revison | Date

PMPE CONSULTANTS MECHANICAL ENGINEERS
5755 Oberlin Drive, Suite #102
San Diego, CA 92121
Tel: (858) 642-0800
Fax: (858) 642-0802
Consultant

REGISTERED PROFESSIONAL ENGINEER
MAX PAJOHEST
M27488
EXP. 06/30/21
MECHANICAL
STATE OF CALIFORNIA
Engineer

studioWC
ARCHITECTURE + ENGINEERING
515 Encinitas Blvd, Ste 201, Encinitas, California 92024
Telephone: (760) 452-8880 Fax: (760) 452-7341

LICENSED ARCHITECT
ROBERT O. WEBB
C-28036
OCTOBER 31, 2021
STATE OF CALIFORNIA

CHET F. HARRITT ELEM. SCHOOL
LRC & CLASSROOM ADDITION
SANTEE SCHOOL DISTRICT

ISOMETRIC DIAGRAMS (WATER & WASTE)

Drawn: RA
Checked: MP
Date:
Job:

P4.3

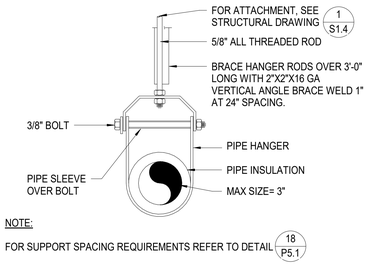

16 P5.1 TYPICAL PIPE HANGER SUPPORT

SCALE: NTS

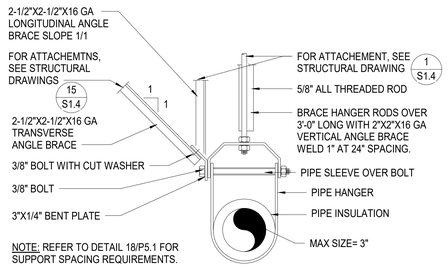

17 P5.1 TYPICAL PIPE SEISMIC BRACING

SCALE: NTS

MAX. GAS PIPE SUPPORT SPACING PER 2016 CPC TABLE 1310.5.4(1)	
PIPE SIZE (INCH)	HANGER SPACING (FEET)
1/4	5
3/8	6
1/2	6
3/4	7
1	8
1-1/4	9
1-1/2 AND LARGER	10
VERTICAL RISERS, ALL SIZES, EVERY FLOOR BUT NO TO EXCEED: 15'-0"	

SPACING BETWEEN SEISMIC BRACING SHALL NOT EXCEED:
TRANVERSE = 40'
LONGITUDINAL = 80'
PROVIDE ADDITIONAL SEISMIC BRACING AT THE END OF EACH RUN AND AT 90 DEGREES ELBOWS.
IN ACCORDANCE WITH SMACNA

GENERAL PIPING SUPPORT PER 2016 CPC TABLE 1210.2.4.1	
STEEL PIPE NOMINAL SIZE OF PIPE (INCH.)	SPACING OF SUPPORTS (FEET)
1/2	6
3/4 OR 1	8
1-1/4" OR LARGER (HORIZONTAL)	10
1-1/4" OR LARGER (VERTICAL)	EVERY FLOOR LEVEL

SPACING BETWEEN SEISMIC BRACING SHALL NOT EXCEED:
TRANVERSE = 40'
LONGITUDINAL = 80'
PROVIDE ADDITIONAL SEISMIC BRACING AT THE END OF EACH RUN AND AT 90 DEGREES ELBOWS.
IN ACCORDANCE WITH SMACNA

18 P5.1 PIPE SUPPORT SPACING PER 2016 CPC

SCALE: NTS

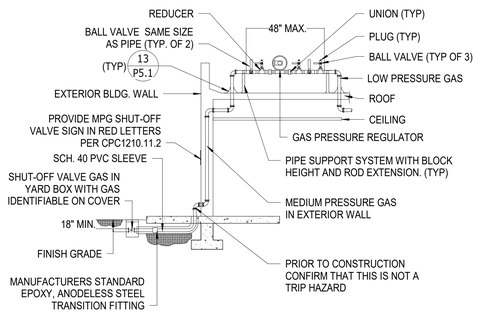

NOTES
1. INSTALLATION OF GAS PRESSURE REGULATOR ASSEMBLE, SHALL COMPLY WITH GAS COMPANY. "POUND DELIVERY SYSTEM STEP DOWN REGULATOR MINIFOLD".

2. HEIGHT OF GAS PIPE FROM ROOF LINE SHALL NOT EXCEED 12 INCHES.

3. PROVIDE MPG SHUT-OFF VALVE SIGN REQUIRED PER CPC 1210.11.2. FOR EXACT LOCATION REFERT TO ARCHITECTURAL DRAWINGS.

19 P5.1 GAS PRESSURE REGULATOR DETAIL

SCALE: NTS

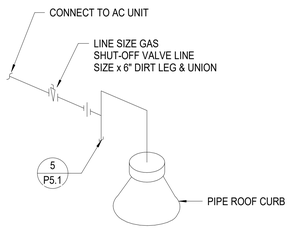

NOTE:

SEE ARCHITECTURAL DETAIL 6/A40.1

11 P5.1 AC UNIT GAS PIPING DETAIL

SCALE: NTS

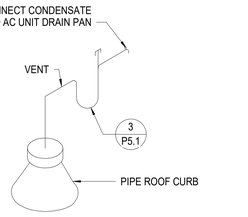

NOTE:

SEE ARCHITECTURAL DETAIL 6/A40.1

12 P5.1 AC UNIT CD PIPING DETAIL

SCALE: NTS

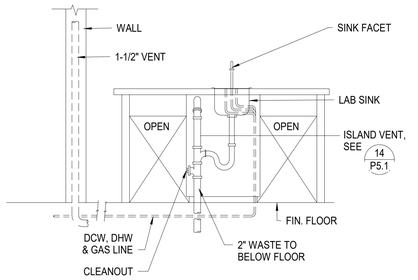

13 P5.1 TYPICAL ISLAND LAB SINK DETAIL

SCALE: NTS

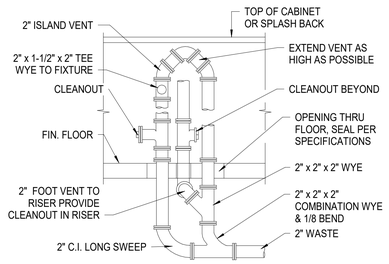

14 P5.1 ISLAND VENT DETAIL

SCALE: NTS

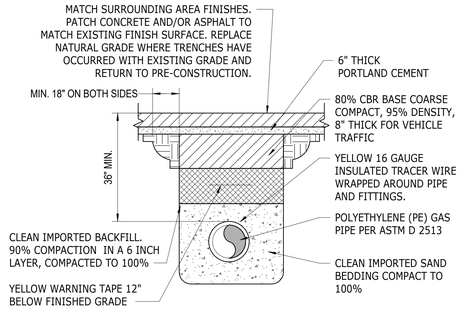

15 P5.1 GAS PIPING TRENCH

SCALE: NTS

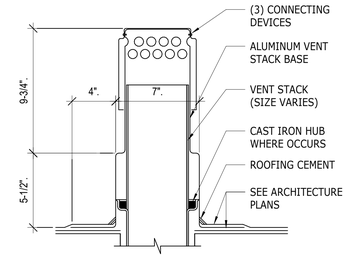

6 P5.1 HIGH SECURITY VENT THOUGH ROOF

SCALE: NTS

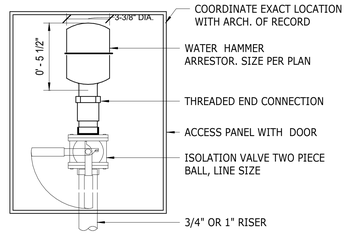

NOTES:

1. INTALLATION SHALL COMPLY W/P.D.I. STANDARD WH201. UNITS NOT SIZED ON PLAN SHALL BE SIZED ACCORDINGLY.
2. INSTALL WATER HAMMER ARRESTOR AT THE END OF THE BRACH BETWEEN THE LAST TWO FIXTURES.
3. IF BRANCH LINE EXCEEDS 20 FEET INSTALL ASECOND WATER HAMMER ARRESTOR IN BETWEEN THE FIRST AND SECOND TO THE LAS FIXTURE.

7 P5.1 WATER HAMMER ARRESTOR

SCALE: NTS

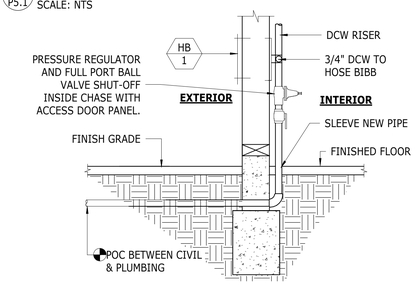

8 P5.1 WATER SERVICE ENTRANCE

SCALE: NTS

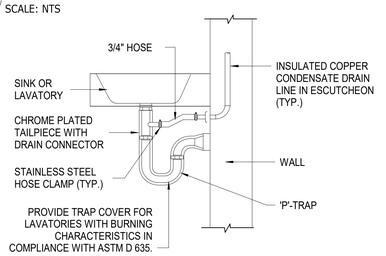

CONDENSATE DRAIN AT LAV. TAIPIECE

9 P5.1 SCALE: NTS

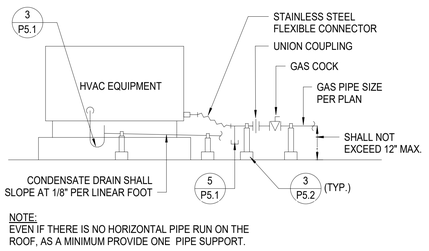

NOTE:
EVEN IF THERE IS NO HORIZONTAL PIPE RUN ON THE ROOF, AS A MINIMUM PROVIDE ONE PIPE SUPPORT.

10 P5.1 HVAC UNIT PIPING DETAIL

SCALE: NTS

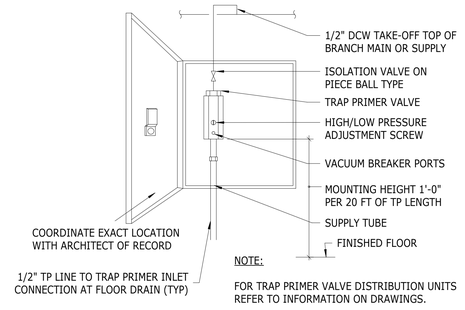

NOTE:

FOR TRAP PRIMER VALVE DISTRIBUTION UNITS REFER TO INFORMATION ON DRAWINGS.

1 P5.1 TRAP PRIMER DETAIL

SCALE: NTS

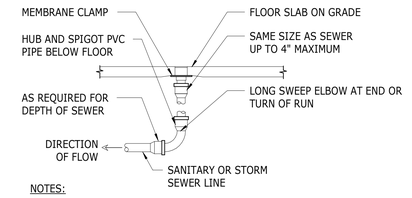

NOTES:

1. PROVIDE ROUND SECURED NICKEL BRONZE ADJUSTABLE TOP WITH "CO" CAST IN COVER. PROVIDE CLEANOUT TOP WITH VARIATIONS SUITABLE FOR FLOOR COVERING (CARPET MARKER, RECESSED FOR TILE, SCORIATED FOR UNFINISHED FLOORS). PROVIDE BRONZE PLUG IN PVC BODY.

2. LOCATE AT BUILDING EXIT, AT ENDS OF RUNS, AT TURNS OF PIPE GREATER THAN 45 DEGREES, AT 50' INTERVALS ON STRAIGHT RUNS, AND WHERE SHOWN ON PLANS. PROVIDE BACKFILL PER ARCHITECTURAL SPECIFICATIONS. LOCATE CLEANOUTS WHERE THERE IS 18" CLEAR AROUND. CONSULT LOCAL CODES FOR OTHER FCO REQUIREMENTS.

2 P5.1 FLOOR CLEANOUT

SCALE: NTS

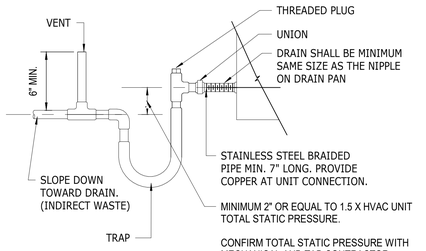

3 P5.1 CONDENSATE DRAIN TRAP

SCALE: NTS

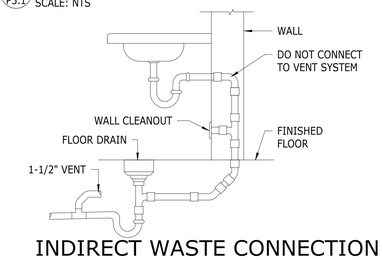

INDIRECT WASTE CONNECTION AT FLOOR SINK TAILPIECE

4 P5.1 SCALE: NTS

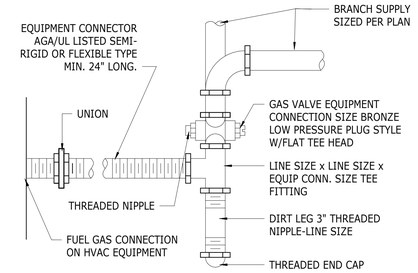

5 P5.1 NAT. GAS CONNECT. AT EQUIP.

SCALE: NTS

IDENTIFICATION STAMP
DIV. OF THE STATE ARCHITECT
APP. 04-118693 INC:
REVIEWED FOR
SS ☑ FLS ☑ ACS ☑
DATE: 03.13.2020

Revision	Date

PMPE CONSULTANTS MECHANICAL ENGINEERS
5755 Oberlin Drive, Suite #102
San Diego, CA 92121
Tel: (858) 642-0800
Fax: (858) 642-0802
Consultant

REGISTERED PROFESSIONAL ENGINEER
MAX PAJOHNEY
M27488
EXP. 06/30/21
MECHANICAL
STATE OF CALIFORNIA
Engineer

studioWC
ARCHITECTURE + ENGINEERING
515 Encinitas Blvd, Ste 201, Encinitas, California 92024
Telephone: (760) 634-8800 Fax: (760) 452-7341

LICENSED ARCHITECT
ROBERT O. WEBB
C-28036
OCTOBER 31, 2021
STATE OF CALIFORNIA

CHET F. HARRITT ELEM. SCHOOL
LRC & CLASSROOM ADDITION
SANTEE SCHOOL DISTRICT

PLUMBING DETAILS

Drawn: RA
Checked: MP
Date:
Job:

P5.1

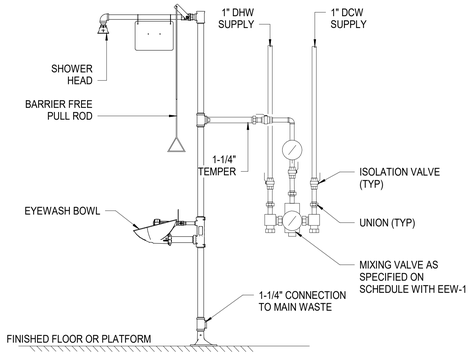

COMBINATION EMERGENCY SHOWER & EYEWASH DETAIL

8 / P5.2 SCALE: NTS

NOTE:
1. CIRCULATING PUMP OPERATION SEQUENCE: HOT WATER CIRCULATING PUMP SHALL BE CONTROLLED BY AQUASTAT AND INSTALLED ON HOT WATER RETURN LINE. THE AQUASTAT SHALL COMMAND THE CIRCULATING PUMP ON AT SET POINT OF 90 DEGREE (ADJ) AND SHALL COMMAND THE CIRCULATING PUMP OFF AT SET POINT OF 105 DEGREE (ADJ). CIRCULATING PUMP OPERATION SHALL BE ENABLED BY PROGRAMMABLE TIMER DURING WORKING HOURS AND DISABLED AFTER WORKING HOURS AND DURING THE WEEKEND.
2. SET MV-1 DISCHARGE TEMPERATURE AT MINIMUM 105°F AND NOT EXCEED 105°F.
3. REFER TO CONTROL DIAGRAM FOR CONNECTIONS AND BACNET COMMUNICATING TO THE WATER HEATER AND CIRCULATION PUMP.

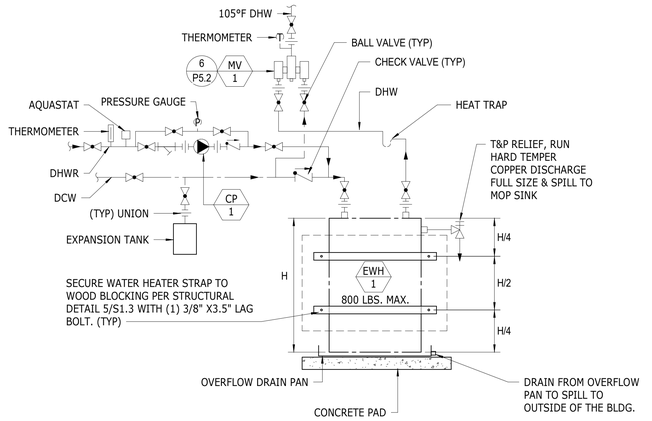

ELECTRIC WATER HEATER DIAGRAM

1 / P5.2 SCALE: NTS

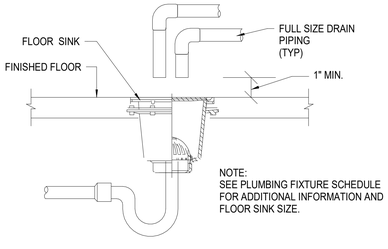

FLOOR SINK INDIRECT WASTE DETAIL

9 / P5.2 SCALE: NTS

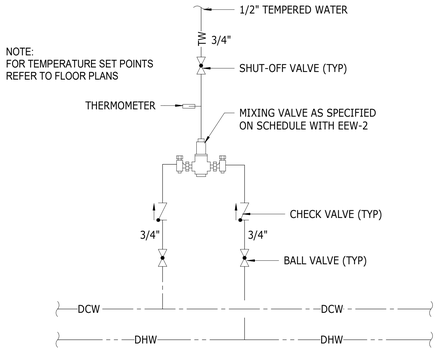

ON-POINT MIXING VALVE

5 / P5.2 SCALE: NTS

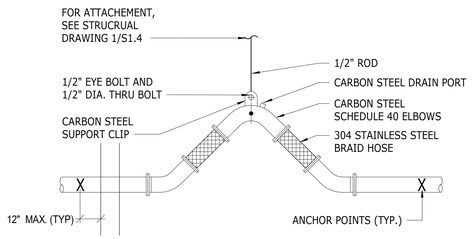

NOTE:
1. ANCHORD PIPE TO BLDG. STRUCTURE ON EACH SIDE OF SEISMIC JOINT IN COMPLIANCE WITH SEISMIC JOINT MANUFACTURER GUIDELINES. FIELD VERIFY EXACT LOCATION.
2. PROVIDE GAS PIPE SEISMIC JOINT " MASON INDUSTRIES" MODEL # CSAVMN OR SIMILAR. FIELD VERIFY SIZE AND LOCATION.

SEISMIC PIPING DETAIL- GAS PIPING

10 / P5.2 SCALE: NTS

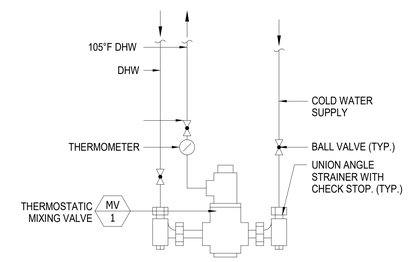

THERMOSTATIC CONTROL VALVE

6 / P5.2 SCALE: NTS

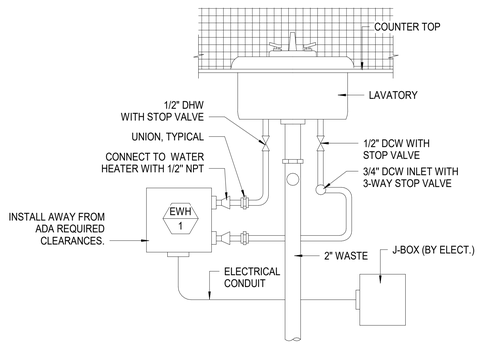

INSTANTANEOUS WATER HEATER DETAIL

7 / P5.2 SCALE: NTS

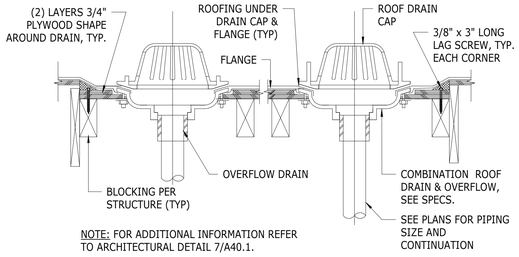

NOTE: FOR ADDITIONAL INFORMATION REFER TO ARCHITECTURAL DETAIL 7/A40.1.

ROOF DRAIN AND OVERFLOW DETAIL

2 / P5.2 SCALE: NTS

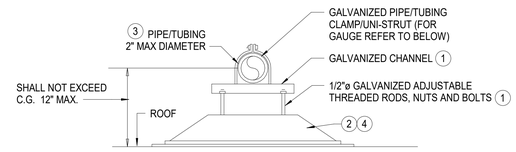

NOTES:
1. UNI STRUT, 12 GA. (OR EQUAL).
2. SUPPORT ASSEMBLY SHALL BE PHP SYSTEM #PP10-C WITH FLEXCOM DOUBLE SIDED ADHESIVE TAPE. INSTALL PER MANUFACTURER'S GUIDELINES.
3. ADJUST SUPPORTS TO PROVIDE 1/8" PER FOOT SLOPE FOR CONDENSATE DRAIN PIPING.
4. PROVIDE SUPPORTS AT 72" O.C. FOR CONDENSATE DRAIN PIPING, 72" O.C. FOR GAS PIPING.

PIPE WEIGHTS:
GAS: 1 " = 1.7 LBS PER LINEAR FOOT
CONDENSATE DRAIN: 3/4" = 0.33 LBS PER LINEAR FOOT

GAS PIPE SEISMIC BRACING:
- FOR PIPES 1 INCH AND SMALLER, IF CENTER OF GRAVITY OF PIPE AND SUPPORT IS LESS THAN 12 INCHES FROM ROOF LINE SEISMIC BRACING IS NOT REQUIRED.
- FOR ANY SIZE PIPE, IF CENTER OF GRAVITY OF PIPE AND SUPPORT IS MORE THAN 12 INCHES FROM ROOF LINE SEISMIC BRACING IS REQUIRED.

CONDENSATE DRAIN AND WATER PIPE SEISMIC BRACING:
- FOR ANY SIZE PIPE, IF CENTER OF GRAVITY OF PIPE AND SUPPORT IS MORE THAN 12 INCHES FROM ROOF LINE SEISMIC BRACING IS REQUIRED, OTHERWISE NOT REQUIRED.

CLAMP GAUGE:
- UP TO 7/8"ø PIPE DIAMETER 16 G.A.
- 1" THRU 1-5/8" PIPE DIAMETER 14 G.A.
- 1-3/4" THRU 2-1/2" PIPE DIAMETER 12 G.A.

ROOF PIPE SUPPORT DETAIL

3 / P5.2 SCALE: NTS

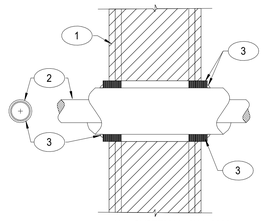

U.L. SYSTEM No. W-L-5039

1. FIRE - RATED WALL PER ARCHITECTURAL. COORDINATE WALL TYPE ASSEMBLY WITH ARCH. DRAWINGS.
2. INSULATED PIPING PER PLANS
3. FILL VOID CAVITY WITH FIRE RESISTIVE MATERIAL. MATERIAL USED SHALL BE 3M BRAND #CP-25 N/S CAULK, #303 PUTTY OR EQUAL. ALL PENETRATIONS SHALL BE PROTECTED BY MATERIALS AND INSTALLATION DETAILS THAT CONFORM TO U.L. LISTING "W-L-1001" FOR THROUGH PENETRATION FIRESTOP SYSTEMS.

FIRE-RATED FRAME WALL PENETRATION DETAIL

4 / P5.2 SCALE: NTS

IDENTIFICATION STAMP
DIV. OF THE STATE ARCHITECT
APP. 04-118693 INC:
REVIEWED FOR
SS ☑ FLS ☑ ACS ☑
DATE: 03.13.2020

Revision | Date

PMPE CONSULTANTS MECHANICAL ENGINEERS
5755 Oberlin Drive, Suite #102
San Diego, CA 92121
Tel: (858) 642-0800
Fax: (858) 642-0802
Consultant

REGISTERED PROFESSIONAL ENGINEER
MAX PAJOUHESH
M27488
EXP. 06/30/21
MECHANICAL
STATE OF CALIFORNIA
Engineer

studioWC
ARCHITECTURE + ENGINEERING
515 Encinitas Blvd, Ste 201, Encinitas, California 92024
Telephone: (760) 634-8800 Fax: (760) 452-7341

LICENSED ARCHITECT
ROBERT O. WEBB
R.D.Webb
C-28036
OCTOBER 31, 2021
STATE OF CALIFORNIA

CHET F. HARRITT ELEM. SCHOOL
LRC & CLASSROOM ADDITION
SANTEE SCHOOL DISTRICT

PLUMBING DETAILS

Drawn: RA
Checked: MP
Date:
Job:

P5.2

ABBREVIATIONS

A	AMPERE (AMPS)
AC	ALTERNATING CURRENT
AF	AMPS-FRAME (RATING)
AIC	AMP INTERRUPTING CURRENT
AM	AMMETER
AS	AMP SWITCH (FUSED SWITCH RATING)
AT	AMPS-TRIP (RATING)
AWG	AMERICAN WIRE GAUGE
BC	BARE COPPER
BLDG	BUILDING
C	CONDUIT
CB	CIRCUIT BREAKER
CO	CONDUIT ONLY
CT	CURRENT TRANSFORMER
CU	COPPER
CFOI	CONTRACTOR FURNISHED OWNER INSTALLED
CFCI	CONTRACTOR FURNISHED CONTRACTOR INSTALLED
DPDT	DOUBLE POLE DOUBLE THROW
DPST	DOUBLE POLE SINGLE THROW
DWG	DRAWING
EX	EXISTING
FLA	FULL LOAD AMPS
FVR	FULL VOLTAGE REVERSING
FVNR	FULL VOLTAGE NON-REVERSING
GFI	GROUND FAULT INTERRUPTER
GRD/GND	GROUND
HID	HIGH INTENSITY DISCHARGE
HOA	HAND-OFF-AUTOMATIC
HP	HORSEPOWER
HPS	HIGH PRESSURE SODIUM
HZ	HERTZ
KW	KILOWATT
LCL	LONG CONTINUOUS LOAD
LRA	LOCKED ROTOR AMPS
LTG	LIGHTING
MCC	MOTOR CONTROL CENTER
MCM (KCM)	THOUSAND CIRCULAR MILS
MECH	MECHANICAL
NC	NORMALLY CLOSED
NF	NON-FUSED
NO	NORMALLY OPEN/NUMBER
OFCI	OWNER FURNISHED CONTRACTOR INSTALLED
OFOI	OWNER FURNISHED OWNER INSTALLED
P	POLE
PH	PHASE
POC	POINT OF CONNECTION
PRS	PVC COATED RIGID STEEL (CONDUIT)
PT	POTENTIAL TRANSFORMER
PVC	POLYVINYL CHLORIDE DUCT
SWBD	SWITCHBOARD
TYP	TYPICAL
UG	UNDERGROUND
UON	UNLESS OTHERWISE NOTED
V	VOLT
VA	VOLTAMPERES
VM	VOLTMETER
VL	VERIFY LOCATION
W	WIRE/WATTS
WP	WEATHERPROOF (NEMA TYPE 3R)
WT	WATERTIGHT
XP	EXPLOSION PROOF (RATED FOR AREA HAZARD)

ELECTRICAL SYMBOL LEGEND

LIGHTING

Symbol	Description
(A)	LIGHTING FIXTURE DESIGNATION
	LIGHTING FIXTURE, CEILING OR WALL MOUNTED AS SHOWN.
	FLUORESCENT LIGHT FIXTURE
	LIGHTING FIXTURE ON EMERGENCY CIRCUIT (LIFE SAFETY BRANCH OR BATTERY PACK) WITH 90 MIN. BACK-UP.
	EXIT SIGN WITH DIRECTION ARROWS AS INDICATED. SHADED QUADRANT INDICATES FACE.
b b	EMERGENCY LIGHTING UNIT. WALL MOUNTED 12" BELOW CEILING (U.O.N.) LETTER INDICATES CIRCUIT CONTROLLED.
	FLUORESCENT STRIP LIGHT
Sa	SINGLE POLE SWITCH, SUBSCRIPT WHEN SHOWN INDICATES FIXTURES CONTROLLED +48" A.F.F. (U.O.N.) HEIGHT PER DETAILS #1/E1.0. WHERE USED IN CONJUCTION WITH OCCUPANCY SENSORS FOR SWITCH TYPE
S3	THREE-WAY SWITCH +48" A.F.F. (U.O.N.) HEIGHT PER DETAILS #1/E1.0
S4	FOUR-WAY SWITCH +48" A.F.F. (U.O.N.) HEIGHT PER DETAILS #1/E1.0
SP	SWITCH WITH PILOT LIGHT +48" A.F.F. (U.O.N.) HEIGHT PER DETAILS #1/E1.0
S2	DOUBLE POLE SWITCH +48" A.F.F. (U.O.N.) HEIGHT PER DETAILS #1/E1.0
SWP	WEATHER PROOF SWITCH +48" A.F.F. (U.O.N.) HEIGHT PER DETAILS #1/E1.0
SK	KEY OPERATED SWITCH +48" A.F.F. (U.O.N.) HEIGHT PER DETAILS #1/E1.0
	SURFACE MOUNTED TRACK LIGHTING FIXTURES
	EXTERIOR SITE LIGHTING FIXTURE AND POLE
	EXTERIOR DECORATIVE SITE LIGHTING FIXTURE AND POLE
	LANDSCAPE LIGHTING FIXTURE
	SPORTSLIGHTING FIXTURES AND POLES
S ab	WALL MOUNTED OCCUPANCY SENSOR LIGHTING CONTROL +48" A.F.F. (U.O.N.) HEIGHT PER DETAILS #1/E1.0
S ab	CEILING MOUNTED (CORNER OF THE ROOM) OCCUPANCY SENSOR LIGHTING CONTROL
S	CEILING MOUNTED OCCUPANCY SENSOR LIGHTING CONTROL
S LV	LOW VOLTAGE LIGHT SWITCH. HEIGHT PER DETAILS #1/E1.0
	DIGITAL LIGHTING CONTROL TYPICAL ROOM REQUIREMENTS.
	NUMBERED DEVICES ARE ADDITIONAL ITEMS SHOWN ON FLOOR PLAN IN ADDITION TO WHAT IS REQUIRED FOR THE TYPICAL ROOM REQUIREMENTS.
— —PZ— —	PRIMARY DAYLIGHT ZONE
— —SZ— —	SECONDARY DAYLIGHT ZONE

DISTRIBUTION EQUIPMENT

Symbol	Description
	DRAW OUT TYPE EQUIPMENT
	VACUUM CIRCUIT BREAKER, RATING AS NOTED.
	AIR INTERRUPTER SWITCH AND FUSE
	AIR INTERRUPTER
	FUSE
	POWER TRANSFORMER, RATING AS NOTED
	POWER CIRCUIT BREAKER DRAWOUT
	AUTOMATIC TRANSFER SWITCH. SEE SCHEDULE
(A)	AMMETER
(V)	VOLTMETER
200AF / 200AT / 3P / 10,000AIC	CIRCUIT BREAKER 200AMP FRAME 200AMP TRIP 3 POLE 10,000 AMPS INTERRUPTING CURRENT
200AS / 200AF / 3P	FUSED SWITCH 200AMP SWITCH 200AMP FUSE 3 POLE
(M)	UTILITY COMPANY METER

POWER CONTINUED

Symbol	Description
	DUPLEX RECEPTACLE, FLOOR MOUNTED
	DUPLEX RECEPTACLE, WALL MOUNTED, +18" A.F.F. (U.O.N.)
HORZ.	RECEPTACLE, WALL MOUNTED HORIZONTALLY, +18" A.F.F. (U.O.N.)
	FOURPLEX RECEPTACLE, WALL MOUNTED, +18" A.F.F. (U.O.N.)
	RECEPTACLE MOUNTED +6" ABOVE COUNTER BACKSPLASH SEE ARCHITECTURAL PLANS FOR REQUIRED MOUNTING HEIGHT PRIOR TO ROUGH-IN.
LCD	PROVIDE (2) DUPLEX RECEPTACLE CEILING MOUNTED LOCATE ADJACENT TO PROJECTOR. FIELD VERIFY EXACT LOCATION PRIOR TO ROUGH-IN.
FP	PROVIDE WALL MOUNTED DUPLEX RECEPTACLE FOR FLAT PANEL, MOUNTING HEIGHT PER ARCHITECTURAL DRAWINGS. VERIFY EXACT LOCATION PRIOR TO ROUGH-IN
	SINGLE RECEPTACLE, WALL MOUNTED +18" A.F.F. (U.O.N.)
C	SINGLE RECEPTACLE (CLOCK HANGER TYPE) WALL MOUNTED +7'-0" A.F.F. (U.O.N.)
	SWITCH CONTROLLED DUPLEX RECEPTACLE +18" U.O.N.
GFI	DUPLEX GROUND FAULT INTERRUPTING RECEPTACLE +18" A.F.F. (U.O.N.)
	DUPLEX RECEPTACLE ON EMERGENCY CIRCUIT +18" A.F.F. (U.O.N.)
WP	DUPLEX RECEPTACLE IN WEATHERPROOF ENCLOSURE +18" A.F.F. (U.O.N.)
WP/L	DUPLEX RECEPTACLE IN WEATHERPROOF "LOCKING" ENCLOSURE +18" A.F.F. (U.O.N.) (SEE TYPICAL DETAILS E3 SERIES SHEETS AND SPECIFICATIONS FOR REQUIRED TYPE).
1G	DUPLEX RECEPTACLE (ORANGE) ISOLATED GROUND WALL MOUNTED +18" A.F.F. (U.O.N.)
1G	FOURPLEX RECEPTACLE (ORANGE) ISOLATED GROUND WALL MOUNTED +18" A.F.F. (U.O.N.)
a	CONTROLLED FOURPLEX RECEPTACLE, WALL MOUNTED, +18" A.F.F. (U.O.N.) (1) DUPLEX, (1) CONTROLLED DUPLEX. SEE LIGHTING CONTROL DIAGRAMS
TP	DUPLEX RECEPTACLE SAFETY TYPE / TAMPER PROOF WALL MOUNTED +18" A.F.F. (U.O.N.)
	DUPLEX COMPUTER RECEPTACLE (GREY), WALL MOUNTED +18" A.F.F. (U.O.N.)
	DUPLEX COMPUTER RECEPTACLE (BLUE) ISOLATED GROUND, SURGE SUPPRESSION, WALL MOUNTED +18" A.F.F. (U.O.N.)
A	SINGLE RECEPTACLE 30 AMP, 250V, 4W, GROUNDING, WALL MOUNTED +18" A.F.F. (U.O.N.). FIELD VERIFY EXACT OUTLET CONFIGURATION WITH EQUIPMENT PRIOR TO ROUGH-IN.
B	SINGLE RECEPTACLE 50 AMP, 250V, 4W, GROUNDING, WALL MOUNTED +18" A.F.F. (U.O.N.). FIELD VERIFY EXACT OUTLET CONFIGURATION WITH EQUIPMENT PRIOR TO ROUGH-IN.
C	SINGLE RECEPTACLE 50 AMP, 250V, 3W, GROUNDING, WALL MOUNTED +18" A.F.F. (U.O.N.). FIELD VERIFY EXACT OUTLET CONFIGURATION WITH EQUIPMENT PRIOR TO ROUGH-IN.
E	SINGLE RECEPTACLE 30 AMP, 125V, 3W, GROUNDING, WALL MOUNTED +18" A.F.F. (U.O.N.). FIELD VERIFY EXACT OUTLET CONFIGURATION WITH EQUIPMENT PRIOR TO ROUGH-IN.
F	SINGLE RECEPTACLE 30 AMP, 250V, 3W, GROUNDING, WALL MOUNTED +18" A.F.F. (U.O.N.). FIELD VERIFY EXACT OUTLET CONFIGURATION WITH EQUIPMENT PRIOR TO ROUGH-IN.
G	SINGLE RECEPTACLE 30 AMP, 250V, 5W, GROUNDING, WALL MOUNTED +18" A.F.F. (U.O.N.). FIELD VERIFY EXACT OUTLET CONFIGURATION WITH EQUIPMENT PRIOR TO ROUGH-IN.
H	SINGLE RECEPTACLE 30 AMP, 480V, 5W, GROUNDING, WALL MOUNTED +18" A.F.F. (U.O.N.). FIELD VERIFY EXACT OUTLET CONFIGURATION WITH EQUIPMENT PRIOR TO ROUGH-IN.
J	SINGLE RECEPTACLE 20 AMP, 250V, 5W, GROUNDING, WALL MOUNTED +18" A.F.F. (U.O.N.). FIELD VERIFY EXACT OUTLET CONFIGURATION WITH EQUIPMENT PRIOR TO ROUGH-IN.
K	SPECIAL PURPOSES KITCHEN EQUIPMENT RECEPTACLE. SEE KITCHEN PLANS FOR EXACT TYPE. FIELD VERIFY EXACT OUTLET CONFIGURATION WITH EQUIPMENT SUPPLIER PRIOR TO ORDERING. SEE KITCHEN PLANS FOR EXACT MOUNTING HEIGHT.
FP	DUPLEX RECEPTACLE, WALL MOUNTED ADJACENT TO FLAT PANEL OUTLET, SEE SIGNAL PLAN FOR EXACT LOCATION.
	MULTI-OUTLET ASSEMBLY, "WIREMOLD" G-3000 SERIES WITH 20AMP DUPLEX RECEPTACLES ON 18" CENTERS, RECEPTACLES TO BE ALTERNATELY WIRED AND INSULATED GROUNDING CONDUCTOR PROVIDED TO EACH
J	JUNCTION BOX, FLOOR MOUNTED
J	JUNCTION BOX, CEILING OR WALL MOUNTED
HD	HAND DRYER CONNECTION, SEE ARCHITECTURAL FOR MOUTNING HEIGHT.
	FUSED DISCONNECT SWITCH, WHERE SHOWN NF = NON-FUSED.
S M	MANUAL MOTOR STARTER +48" A.F.F. OR ON EQUIPMENT (U.O.N.)
1	MOTOR CONNECTION, NUMERAL INDICATES HORSEPOWER.
AC 1	MECHANICAL EQUIPMENT TAG (SEE MECHANICAL DRAWINGS FOR DESCRIPTION)
	CONDUIT AND WIRE, CONCEALED IN CEILING OR WALL
	CONDUIT AND WIRE, CONCEALED IN OR UNDER FINISHED FLOOR OR UNDER FINISHED GRADE.
	FLEXIBLE CONDUIT CONNECTION
	BRANCH CIRCUIT HOMERUN TO PANEL. SLASHES INDICATE NUMBER OF CONDUCTORS. EQUIPMENT GROUND WIRE NOT INDICATED U.O.N. #12 CONDUCTORS ARE MINIMUM, NO HASH MARKS = MIN (2) #12
	3/4" CONDUIT STUBBED FROM DEVICE TO ABOVE ACCESSIBLE CEILING
#8	BRANCH CIRCUIT HOMERUN, NUMBER INDICATES INCREASED CONDUCTOR SIZE, CONDUCTORS SHALL REMAIN AS INDICATED FOR SIZE THROUGHOUT THE ENTIRE CIRCUIT.
	PANELBOARD, SURFACE MOUNTED.
	PANELBOARD, RECESSED
T	STEP-DOWN TRANSFORMER
	DISTRIBUTION SWITCHBOARD
—SR—	SURFACE MOUNTED RACEWAY SINGLE SECTION SERIES, NON METALLIC (WHITE)
—SR— 2	SURFACE MOUNTED RACEWAY TWO SECTION SERIES, NON METALLIC (WHITE)
—SR— 3	SURFACE MOUNTED RACEWAY THREE SECTION SERIES, NON METALLIC (WHITE)

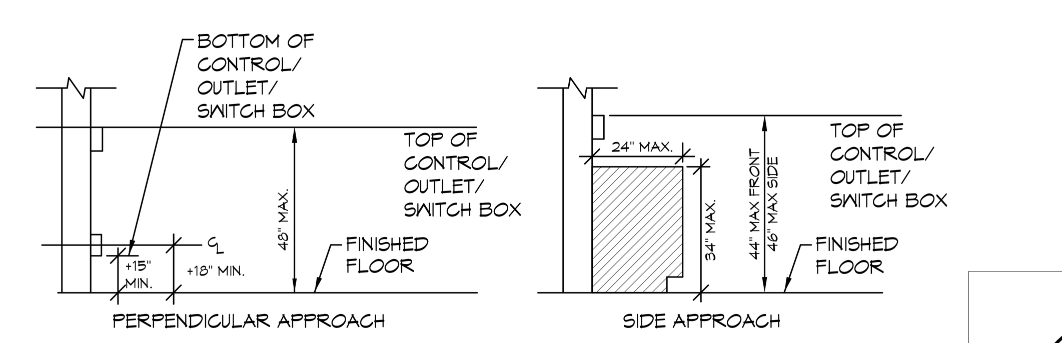

NOTE: MAINTAIN MINIMUM 30"X48" CLEAR FLOOR SPACE AT EACH APPROACH.

MOUNTING HEIGHT OVER OBSTRUCTION — 1 / E1.0

NO SCALE

GENERAL PROJECT NOTES:

1. UNLESS WHERE OTHERWISE NOTED, ALL WORK INDICATED ON THESE DRAWINGS SHALL BE CONSIDERED NEW WORK.
2. UNLESS WHERE OTHERWISE NOTED, ALL DIMENSIONS ARE TO BE CENTERLINE OF THE DEVICE.
3. "GENERAL NOTES" SHOWN ON AN INDIVIDUAL DRAWING APPLY TO ALL WORK SHOWN ON THAT SHEET. "KEY NOTES" ONLY APPLY TO SPECIFIC ITEMS WHERE ANNOTATED AT SPECIFIC LOCATIONS. SOME KEY NOTES MAY NOT APPLY TO ANY SPECIFIC ITEMS.
4. FOR TWO STORY BUILDING CONSTRUCTION, NO CONDUITS SHALL BE ROUTED HORIZONTALLY WITHIN THE FLOOR SLAB OF THE SECOND FLOOR.
5. UNLESS SPECIFICALLY SHOWN ON THESE PLANS, NO STRUCTURAL MEMBER SHALL BE CUT, NEITHER DRILLED NOR NOTCHED WITHOUT PRIOR WRITTEN AUTHORIZATION FROM THE STRUCTURAL ENGINEER AND THE DIVISION OF THE STATE ARCHITECT.

GENERAL DEMOLITION NOTES:

1. ALL ELECTRICAL EQUIPMENT, EXPOSED RACEWAY AND CONDUIT, OUTLET BOXES AND RINGS, AND DEVICES ARE TO BE REMOVED, EXCEPT WHERE SHOWN TO REMAIN. EXISTING WIRING, WHETHER EXPOSED, IN CONDUIT OR RACEWAY IS TO BE REMOVED TO THE GREATEST EXTENT POSSIBLE.
2. THE ELECTRICAL CONTRACTOR IS TO DIRECT THE REMOVAL OF THE ABOVE LISTED WORK.

MEP COMPONENT ANCHORAGE NOTE:

ALL ELECTRICAL COMPONENTS SHALL BE ANCHORED AND INSTALLED PER THE DETAILS ON THE DSA APPROVED CONSTRUCTION DOCUMENTS. WHERE NO DETAIL IS INDICATED, THE FOLLOWING COMPONENTS SHALL BE ANCHORED OR BRACED TO MEET THE FORCE AND DISPLACEMENT REQUIREMENTS PRESCRIBED IN THE 2016 CBC, SECTIONS 1616A.1.18 THROUGH 1616A.1.26 AND ASCE 7-10 CHAPTER 13, 26 AND 30.

1. ALL PERMANENT EQUIPMENT AND COMPONENTS.
2. TEMPORARY OR MOVABLE EQUIPMENT THAT IS PERMANENTLY ATTACHED (E.G. HARD WIRED) TO THE BUILDING UTILITY SERVICES SUCH AS ELECTRICITY, GAS OR WATER.
3. MOVABLE EQUIPMENT WHICH IS STATIONED IN ONE PLACE FOR MORE THAN 8 HOURS AND HEAVIER THAN 400 POUNDS ARE REQUIRED TO BE ANCHORED WITH TEMPORARY ATTACHMENTS.

THE FOLLOWING MECHANICAL AND ELECTRICAL COMPONENTS SHALL BE POSITIVELY ATTACHED TO THE STRUCTURE, BUT NEED NOT BE DETAILED ON THE PLANS. THESE COMPONENTS SHALL HAVE FLEXIBLE CONNECTIONS PROVIDED BETWEEN THE COMPONENT AND ASSOCIATED DUCTWORK, PIPING, AND CONDUIT.

A. COMPONENTS WEIGHING LESS THAN 400 POUNDS AND HAVE A CENTER OF MASS LOCATED 4 FEET OR LESS ABOVE THE ADJACENT FLOOR OR ROOF LEVEL THAT DIRECTLY SUPPORT THE COMPONENT.

B. COMPONENTS WEIGHING LESS THAN 20 POUNDS, OR IN THE CASE OF DISTRIBUTED SYSTEMS, LESS THAN 5 POUNDS PER FOOT, WHICH ARE SUSPENDED FROM A ROOF OR FLOOR OR HUNG FROM A WALL.

FOR THOSE ELEMENTS THAT DO NOT REQUIRE DETAILS ON THE APPROVED DRAWINGS, THE INSTALLATION SHALL BE SUBJECT TO THE APPROVAL OF THE STRUCTURAL ENGINEER OF RECORD AND THE DSA DISTRICT STRUCTURAL ENGINEER. THE PROJECT INSPECTOR WILL VERIFY THAT ALL COMPONENTS AND EQUIPMENT HAVE BEEN ANCHORED IN ACCORDANCE WITH ABOVE REQUIREMENTS.

PIPING, DUCTWORK, AND ELECTRICAL DISTRIBUTION SYSTEM BRACING NOTE

PIPING, DUCTWORK AND ELECTRICAL DISTRIBUTION SYSTEMS SHALL BE BRACED TO COMPLY WITH THE FORCES AND DISPLACEMENTS PRESCRIBED IN ASCE 7-10 SECTION 13.3 AS DEFINED IN ASCE 7-10 SECTION 13.6.5.6, 13.6.7, 13.6.8, AND 2016 CBC, SECTIONS 1616A.1.23, 1616A.1.24 AND 1616A.1.25 AND 1616A.1.26.

THE METHOD OF SHOWING BRACING AND ATTACHMENTS TO THE STRUCTURE FOR THE IDENTIFIED DISTRIBUTION SYSTEM ARE AS NOTED BELOW. WHEN BRACING AND ATTACHMENTS ARE BASED ON A PREAPPROVED INSTALLATION GUIDE (e.g., SMACNA OR OSHPD OPM), COPIES OF THE BRACING SYSTEM INSTALLATION GUIDE OR MANUAL SHALL BE AVAILABLE ON THE JOBSITE PRIOR TO THE START OF AND DURING THE HANGING AND BRACING OF THE DISTRIBUTION SYSTEMS. THE STRUCTURAL ENGINEER OF RECORD SHALL VERIFY THE ADEQUACY OF THE STRUCTURE TO SUPPORT THE HANGER AND BRACE LOADS.

MECHANICAL PIPING (MP), MECHANICAL DUCTS (MD), PLUMBING PIPING (PP), ELECTRICAL DISTRIBUTION SYSTEM (E):

MP☐ MD☐ PP☐ E☐ - OPTION 1: DETAILED ON THE APPROVED DRAWINGS WITH PROJECT SPECIFIC NOTES AND DETAILS.

MP☐ MD☐ PP☐ E■ - OPTION 2: SHALL COMPLY WITH THE APPLICABLE OSHPD PRE-APPROVED (OPM#) #0043-13

MP☐ MD☐ PP☐ - OPTION 3: SHALL COMPLY WITH THE SMACNA SEISMIC RESTRAINT MANUAL, OSHPD EDITION (2009). INCLUDING ANY ADDENDA, FASTENERS AND OTHER ATTACHMENTS NOT SPECIFICALLY IDENTIFIED IN THE SMACNA SEISMIC RESTRAINT MANUAL, OSHPD EDITION, ARE DETAILED ON THE APPROVED DRAWINGS WITH PROJECT SPACIFIC NOTES AND DETAILS. THE DETAILS SHALL ACCOUNT FOR THE APPLICABLE SEISMIC HAZARD LEVEL ____ AND CONNECTION LEVEL ____ FOR THE PROJECT AND CONDITIONS.

FIRE RATED ASSEMBLIES NOTE:

1. REFER TO ARCHITECTURAL DRAWINGS FOR EXACT DESCRIPTION AND DETAIL OF ALL FIRE RATED ASSEMBLIES.

IDENTIFICATION STAMP
DIV. OF THE STATE ARCHITECT
APP. 04-118693 INC:
REVIEWED FOR
SS ☑ FLS ☑ ACS ☑
DATE: 03.13.2020

Revison | Date

Consultant

Engineer

studioWC ARCHITECTURE + ENGINEERING
515 Encinitas Blvd. Ste. 201, Encinitas, California 92024
Telephone: (760)753-6800 Fax: (760)452-7541

LICENSED ARCHITECT ROBERT D. WEBB A.I.A. C-28036 OCTOBER 31, 2021 STATE OF CALIFORNIA

REGISTERED PROFESSIONAL ENGINEER MONICA GOESE-HANSEN NO.E 14781 Exp. 6-30-2021 ELECTRICAL STATE OF CALIFORNIA

JOHNSON CONSULTING ENGINEERS, INC.
Power | Lighting | Multimedia
Communications | Data Networking
12875 Brookprinter Place, Suite 300
Poway, CA 92064
P 858.679.4030 | F 858.513.0559
www.jce-inc.com

#19033 2/13/2020 1:59:58 PM

CHET. HARRITT ELEM. SCHOOL
LRC & CLASSROOM ADDITION
SANTEE SCHOOL DISTRICT

ELECTRICAL LEGEND AND NOTES

Drawn:

Checked:

Date:

Job: SSD-CFH-05

E1.0

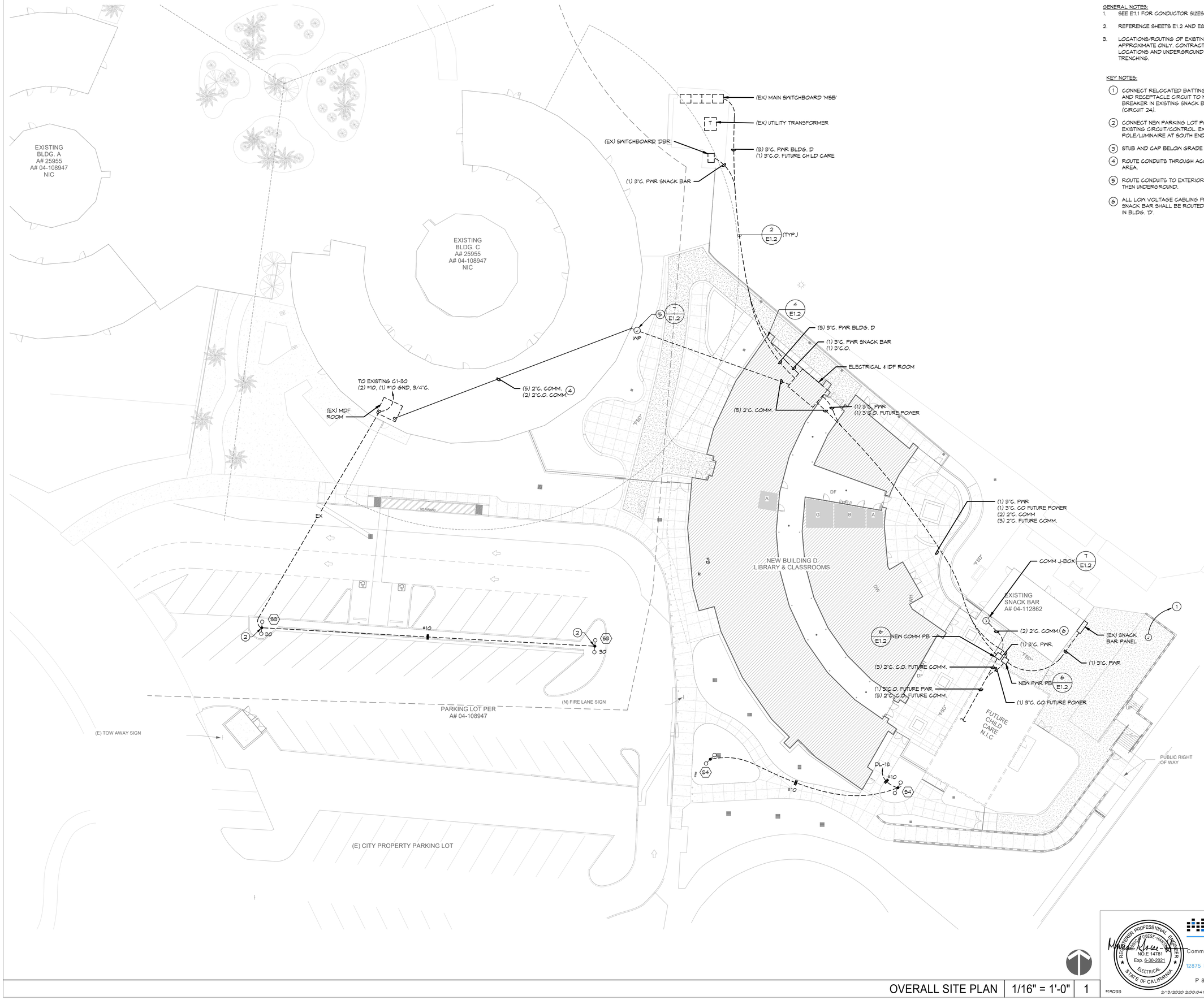

GENERAL NOTES:

1. SEE E7.1 FOR CONDUCTOR SIZES AND QUANTITIES.
2. REFERENCE SHEETS E1.2 AND E8.1 FOR TYPICAL DETAILS.
3. LOCATIONS/ROUTING OF EXISTING/NEW EQUIPMENT IS APPROXIMATE ONLY. CONTRACTOR TO VERIFY ALL LOCATIONS AND UNDERGROUND UTILITIES PRIOR TO TRENCHING.

KEY NOTES:

1. CONNECT RELOCATED BATTING CAGE LIGHTING AND RECEPTACLE CIRCUIT TO NEW 20A/1P CIRCUIT BREAKER IN EXISTING SNACK BAR POWER PANEL (CIRCUIT 24).
2. CONNECT NEW PARKING LOT POLE LUMINAIRES TO EXISTING CIRCUIT/CONTROL. EXTEND WIRING TO NEW POLE/LUMINAIRE AT SOUTH END OF PARKING LOT.
3. STUB AND CAP BELOW GRADE FOR FUTURE.
4. ROUTE CONDUITS THROUGH ACCESSIBLE CEILING AREA.
5. ROUTE CONDUITS TO EXTERIOR MOUNTED J-BOX THEN UNDERGROUND.
6. ALL LOW VOLTAGE CABLING FROM THE EXISTING SNACK BAR SHALL BE ROUTED TO THE IDF CLOSET IN BLDG. 'D'.

IDENTIFICATION STAMP
DIV. OF THE STATE ARCHITECT
APP. 04-118693 INC:
REVIEWED FOR
SS ☑ FLS ☑ ACS ☑
DATE: 03.13.2020

Revison	Date

Consultant

Engineer

studiowc
ARCHITECTURE + ENGINEERING
515 Encinitas Blvd, Ste. 201, Encinitas, California 92024
Telephone: (760)753-6800 Fax: (760)452-7541

LICENSED ARCHITECT
ROBERT D. WEBB AJA
C-28036
OCTOBER 31, 2021
STATE OF CALIFORNIA

CHET. HARRITT ELEM. SCHOOL
LRC & CLASSROOM ADDITION
SANTEE SCHOOL DISTRICT

OVERALL SITE PLAN

Drawn: Author
Checked: Checker
Date:
Job: SSD-CFH-05

E1.1

OVERALL SITE PLAN | 1/16" = 1'-0" | 1

REGISTERED PROFESSIONAL ENGINEER
NO.E 14781
Exp. 6-30-2021
ELECTRICAL
STATE OF CALIFORNIA

JOHNSON CONSULTING ENGINEERS, INC.
Power | Lighting | Multimedia
Communications | Data Networking
12875 Brookprinter Place, Suite 300
Poway, CA 92064
P 858.679.4030 | F 858.513.0559
www.jce-inc.com

#19033 2/13/2020 2:00:04 PM

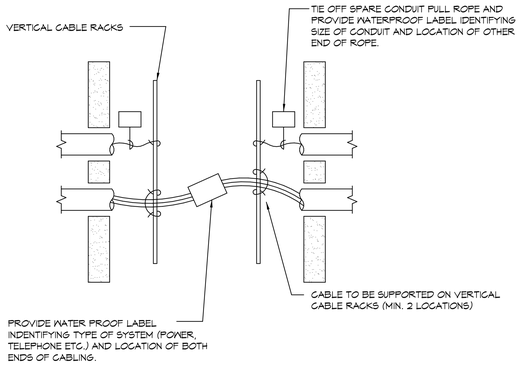

TYPICAL UNDERGROUND PULLBOX LABELING/SUPPORT DETAIL — 1 / E1.2
NO SCALE

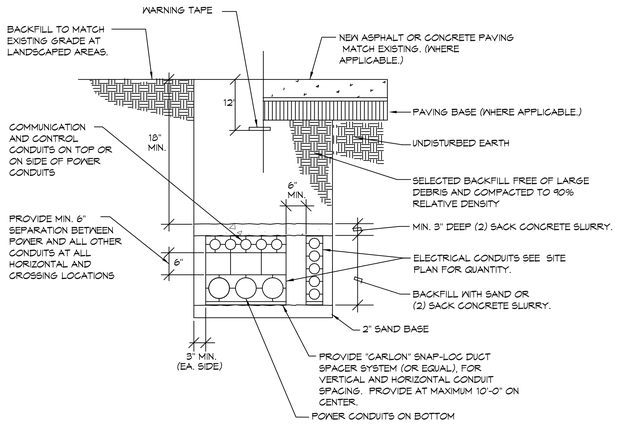

TYPICAL TRENCH DETAIL — 2 / E1.2
NO SCALE

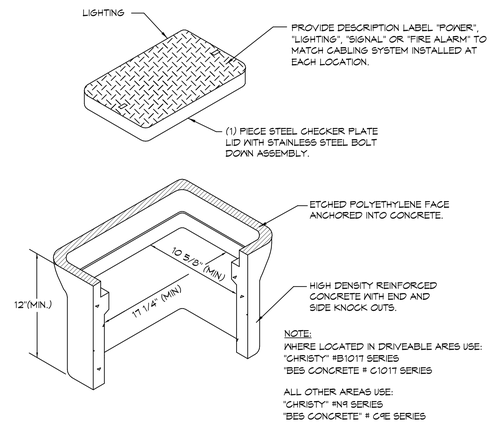

UNDERGROUND PULLBOX STYLE 'A' — 3 / E1.2
NO SCALE

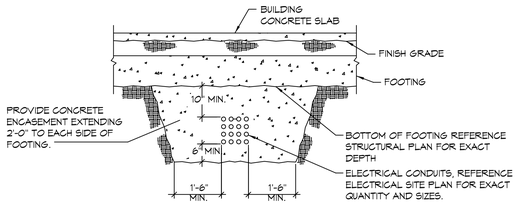

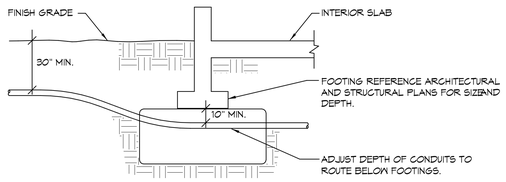

UNDERGROUND CONDUIT - INSTALLATION AT BUILDING FOOTING — 4 / E1.2
NO SCALE

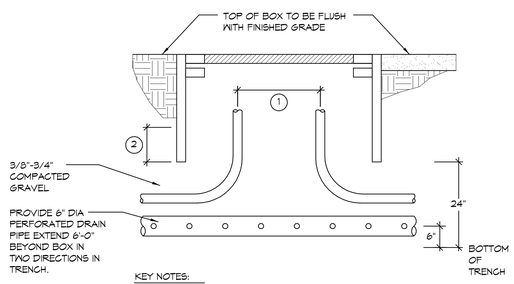

UNDERGROUND PULLBOX STYLE 'A' OR 'B' TYP. INSTALLATION — 5 / E1.2
NO SCALE

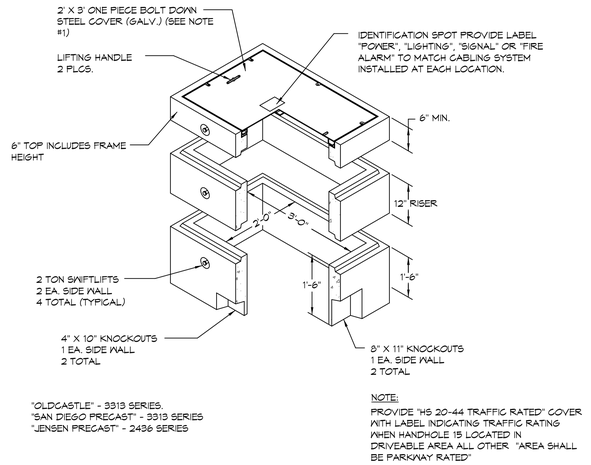

UNDERGROUND PULLBOX STYLE 'B' — 6 / E1.2
NO SCALE

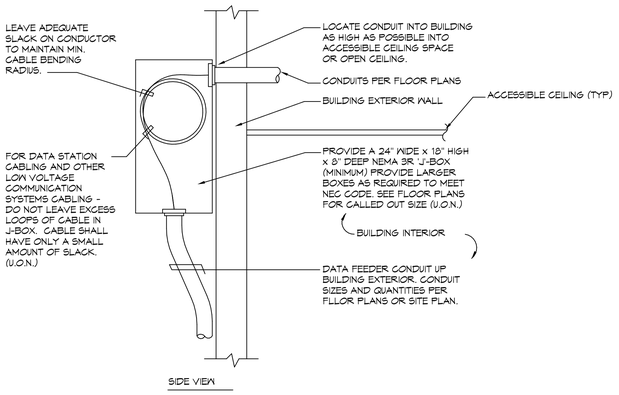

DATA SYSTEM INSTALLATION DETAIL — 7 / E1.2
NO SCALE

IDENTIFICATION STAMP
DIV. OF THE STATE ARCHITECT
APP. 04-118693 INC:
REVIEWED FOR
SS ☑ FLS ☑ ACS ☑
DATE: 03.13.2020

Revison	Date

Consultant

Engineer

studiowc
ARCHITECTURE + ENGINEERING
515 Encinitas Blvd, Ste 201, Encinitas, California 92024
Telephone: (760) 634-8800 Fax: (760) 452-7341

LICENSED ARCHITECT
ROBERT D. WEBB
C-28036
OCTOBER 31, 2021
STATE OF CALIFORNIA

CHET. HARRITT ELEM. SCHOOL
LRC & CLASSROOM ADDITION
SANTEE SCHOOL DISTRICT

SITE ELECTRICAL DETAILS

Drawn: Author
Checked: Checker
Date:
Job: SSD-CFH-05

E1.2

REGISTERED PROFESSIONAL ENGINEER
THOMAS JEROME HANSEN
NO.E 14781
Exp. 6-30-2021
ELECTRICAL
STATE OF CALIFORNIA

JOHNSON
CONSULTING ENGINEERS, INC.
Power | Lighting | Multimedia
Communications | Data Networking
12875 Brookprinter Place, Suite 300
Poway, CA 92064
P 858.679.4030 | F 858.513.0559
www.jce-inc.com

#19033 2/13/2020 2:00:06 PM

STATE OF CALIFORNIA
Electrical Power Distribution
CEC-NRCC-ELC-01-E (Revised 01/16) CALIFORNIA ENERGY COMMISSION

CERTIFICATE OF COMPLIANCE	NRCC-ELC-01-E
Electrical Power Distribution	Page 1 of 4
Project Name: CHET HARRITT ES	Date Prepared: 10/14/2019

General Information

Project Address: 1400 W. 9TH AVENUE ESCONDIDO, CA 92029	Climate Zone: 10	Conditioned Floor Area : 11,000	
		Unconditioned Floor Area :	
Building Type:	☑ Nonresidential	☐ High-Rise Residential	☐ Hotel/Motel
☒ Schools	☐ Relocatable Public Schools	☐ Conditioned Spaces	☐ Unconditioned Spaces
Phase of Construction:	☑ New Construction	☐ Addition	☐ Alteration

In the table below identify all applicable construction documents that specify the requirements for the scope of responsibility reported by this certificate. Use additional pages as needed to list all construction documents related to compliance of Section 130.5.

Document Number	Document Title/Descriptions (include description information for Table or Schedule if it contains compliance information)	Document Sheet # or Page #	Indicate which subsection of Section 130.5 is related to the document (e.g. 130.5(a) for service electrical metering)
E7.1/9.1	ONE-LINE DIAGRAM PANEL SCHEDULES		

Add Row Remove Last

A. Service Electrical Metering

Check one of the three boxes below if the electrical power distribution system is in compliance with Section 130.5(a).

☐ For newly installed electrical service in newly constructed buildings, Service Electrical Metering is required according to Section 130.5(a). *Fill out Column 1 through 6 of table below.*

☐ For new or replacement electrical service equipment in existing buildings, Service Electrical Metering is required according to Section 141.0(b)2Pi. *Fill out Column 1 through 6 of table below.*

☐ EXCEPTION to Electrical Service Metering: Service or feeder for which the utility company provides a metering system that indicates instantaneous kW demand and kWh for a utility-defined period. *Fill out Column 1, 2 and 6 of table below with the compliance information.*

Fill out a separate line for each electrical service that is connected to the building.

Electrical Service Schedule	Electrical Service Rating	Metering Capabilities (check all that are present)				Exception to 130.5 (a)	Field Inspector
01	02	03	04	05	06	07	08
Electrical Service Designation/ Location/Description	kVA	Instantaneous (at the time) kW	Historical peak (kW)	Tracking kWh for a user-definable period	kWh per rate period	Utility metering system	Check that the metering complies
MAIN SWITCHBOARD-EXIST.		☐	☐	☐	☐	☐	☐

Add Row Remove Last

STATE OF CALIFORNIA
Electrical Power Distribution
CEC-NRCC-ELC-01-E (Revised 01/16) CALIFORNIA ENERGY COMMISSION

CERTIFICATE OF COMPLIANCE	NRCC-ELC-01-E
Electrical Power Distribution	Page 2 of 4
Project Name: CHET HARRITT ES	Date Prepared: 10/14/2019

B. Separation of Electrical Circuits for Electrical Energy Monitoring

Check all boxes below if the electrical power distribution system is in compliance with Section 130.5(b).

☒ The electrical power distribution system meets the separation of electrical circuits for electrical energy monitoring requirement of Section 130.5(b). The electrical power distribution systems is designed so that measurement devices can monitor the electrical energy usage of load types according to TABLE 130.5-B.

☐ Describe the electrical power distribution system installed and the compliance method chosen in meeting the requirement of Section 130.5(b). Use the space below to include the information. Examples of compliance methods are detailed in Nonresidential Compliance Manual Chapter 8.

Fill out Column 1 thru 3 with the compliance information.

General Information	Electrical Power Distribution System information and Method of compliance	Electrical Service Rating	Enforcement Agency
01	02	03	04
Electrical Service Designation/Location/Description	Describe the electrical power distribution system installed and the compliance method used	kVA	Check that the system complies
SWBD. 'DBD'	MECHANICAL, LIGHTING AND RECEPT. LOADS ON SEPARATE PANELS METHOD 1	287	☐

Field Inspector Notes:

STATE OF CALIFORNIA
Electrical Power Distribution
CEC-NRCC-ELC-01-E (Revised 01/16) CALIFORNIA ENERGY COMMISSION

CERTIFICATE OF COMPLIANCE	NRCC-ELC-01-E
Electrical Power Distribution	Page 3 of 4
Project Name: CHET HARRITT ES	Date Prepared: 10/14/2019

C. Voltage Drop *Check all boxes below if he electrical power distribution system is in compliance with Section 130.5(c).*	Enforcement Agency Check that the system complies
☒ The electrical power distribution system meets the voltage drop requirement of Section 130.5(c). The maximum combined voltage drop on feeder conductors and branch circuit conductors to the farthest connected load or outlet, do not exceed 5%.	☐
☐ Voltage drop calculation documents showing compliance to Section 130.5(c) are submitted as part of the compliance document submittal.	☐

D. Circuit Controls for 120-Volt Receptacles and Controlled Receptacles *Check one or more boxes below for applicable requirements of Section 130.5(d) for the electrical power distribution system.*	Field Inspector Check that the system complies
☒ The control is capable of automatically shutting OFF the controlled receptacles when the space is typically unoccupied, either at the receptacle or circuit level. For the automatic time switch control, it incorporates an override control that allows the controlled receptacle to remain ON for no more than 2 hours when an override is initiated and an automatic holiday "shut-OFF" feature that turns OFF all loads for at least 24 hours and then resumes the normally scheduled operation. Countdown timer switches are not be used to comply with the automatic time switch control requirements. The controls meet the requirement of Section 130.5(d)1.	☐
☒ There is at least one controlled receptacle within 6 ft from each uncontrolled receptacle. Where receptacles are installed in modular furniture in open office area, at least one controlled receptacle is installed at each workstation. The receptacles meet the requirement of Section 130.5(d)2.	☐
☒ There are installed split wired receptacles with at least one controlled and one uncontrolled receptacle. Where receptacles are installed in modular furniture in open office area, at least one controlled receptacle is installed at each workstation. The receptacles meet the requirement of Section 130.5(d)2.	☐
☒ Permanent and durable marking for controlled receptacles or circuits to differentiate them from uncontrolled receptacles or circuits is provided. The markings meet the requirement of Section 130.5(d)3.	☐
☐ For hotel and motel guest rooms, there are controlled receptacles for at least one-half of the 120-volt receptacles in each guest room. Electric circuits serving controlled receptacles in guestrooms are installed to have captive key controls, occupancy sensing controls, or automatic controls so the power is switched off no longer than 30 minutes after the guest room has been vacated. The receptacles meet the requirement of Section 130.5(d)4.	☐
☒ Receptacles that are only for the following purposes are excepted from Section 130.5(d): - Receptacles specifically for refrigerators and water dispensers in kitchen areas. - Receptacles located a minimum of six ft above the floor that are specifically for clocks. - Receptacles for network copiers, fax machines, A/V and data equipment other than personal computers in copy rooms. - Receptacles on circuits rated more than 20 amperes. - Receptacles connected to an uninterruptible power supply (UPS) that are intended to be in continuous use, 24 hours per day/365 days per year, and are marked to differentiate them from other uncontrolled receptacles or circuits.	☐

STATE OF CALIFORNIA
Electrical Power Distribution
CEC-NRCC-ELC-01-E (Revised 01/16) CALIFORNIA ENERGY COMMISSION

CERTIFICATE OF COMPLIANCE	NRCC-ELC-01-E
Electrical Power Distribution	Page 4 of 4
Project Name: CHET HARRITT ES	Date Prepared: 10/14/2019

DOCUMENTATION AUTHOR'S DECLARATION STATEMENT

1. I certify that this Certificate of Compliance documentation is accurate and complete.

Documentation Author Name: Monica Hansen	Documentation Author Signature: [signature]
Company: Johnson Consulting Engineers, Inc.	Signature Date: 10/14/2019
Address: 12875 Brookprinter Pl, Suite #300	CEA/ HERS Certification Identification (if applicable):
City/State/Zip: Poway, CA 92064	Phone: 858-679-4030

RESPONSIBLE PERSON'S DECLARATION STATEMENT

I certify the following under penalty of perjury, under the laws of the State of California:
1. The information provided on this Certificate of Compliance is true and correct.
2. I am eligible under Division 3 of the Business and Professions Code to accept responsibility for the building design or system design identified on this Certificate of Compliance (responsible designer).
3. The energy features and performance specifications, materials, components, and manufactured devices for the building design or system design identified on this Certificate of Compliance conform to the requirements of Title 24, Part 1 and Part 6 of the California Code of Regulations.
4. The building design features or system design features identified on this Certificate of Compliance are consistent with the information provided on other applicable compliance documents, worksheets, calculations, plans and specifications submitted to the enforcement agency for approval with this building permit application.
5. I will ensure that a completed signed copy of this Certificate of Compliance shall be made available with the building permit(s) issued for the building, and made available to the enforcement agency for all applicable inspections. I understand that a completed signed copy of this Certificate of Compliance is required to be included with the documentation the builder provides to the building owner at occupancy.

Responsible Designer Name: Monica Hansen	Responsible Designer Signature: [signature]
Company: Johnson Consulting Engineers, Inc.	Date Signed: 10/14/2019
Address: 12875 Brookprinter Pl, Suite #300	License: E14781
City/State/Zip: Poway, CA 92064	Phone: 858-679-4030

STATE OF CALIFORNIA
INDOOR LIGHTING
CEC-NRCC-LTI-01-E (Revised 04/16) CALIFORNIA ENERGY COMMISSION

CERTIFICATE OF COMPLIANCE	NRCC-LTI-01-E
Indoor Lighting	(Page 1 of 6)
Project Name: CHET HARRITT ES	Date Prepared: 10/14/2019

A. General Information

Climate Zone: 10	Conditioned Floor Area: 16975			
	Unconditioned Floor Area:			
Building Type:	☐ Nonresidential	☐ High-Rise Residential	☐ Hotel/Motel	
☑ Schools	☐ Relocatable Public Schools	☐ Conditioned Spaces	☐ Unconditioned Spaces	
Phase of Construction:	☑ New Construction	☐ Addition	☐ Alteration	
Method of Compliance:	☐ Complete Building	☑ Area Category	☐ Tailored	
Project Address: 8129 ARLETTE ST, SANTEE, CA 92701				

B. Lighting Compliance Documents (select yes for each document included)

For detailed instructions on the use of this and all Energy Efficiency Standards compliance documents, refer to the Nonresidential Manual published by the California Energy Commission.

YES	NO	COMP. DOC.	TITLE
◉	○	NRCC-LTI-01-E	Certificate of Compliance. All Pages required on plans for all submittals.
◉	○	NRCC-LTI-02-E	Lighting Controls, Certificate of Compliance, and PAF Calculation. All Pages required on plans for all submittals.
◉	○	NRCC-LTI-03-E	Indoor Lighting Power Allowance
○	◉	NRCC-LTI-04-E	Tailored Method Worksheets
○	◉	NRCC-LTI-05-E	Line Voltage Track Lighting Worksheets
○	◉	NRCC-LTI-06-E	Indoor Lighting Existing Conditions

STATE OF CALIFORNIA
INDOOR LIGHTING
CEC-NRCC-LTI-01-E (Revised 04/16) CALIFORNIA ENERGY COMMISSION

CERTIFICATE OF COMPLIANCE	NRCC-LTI-01-E
Indoor Lighting	(Page 2 of 6)
Project Name: CHET HARRITT ES	Date Prepared: 10/14/2019

C. Summary of Allowed Lighting Power

Conditioned and Unconditioned space Lighting must not be combined for compliance

	Indoor Lighting Power for Conditioned Spaces		Watts	Indoor Lighting Power for Unconditioned Spaces		Watts
01	**Installed** Lighting NRCC-LTI-01-E, Table H, page 5	+	8356	**Installed** Lighting NRCC-LTI-01-E, Table H, page 5	+	
02	Portable Only for Offices NRCC-LTI-01-E, Table G, page 4	+	0			
03	Minus Lighting Control Credits NRCC-LTI-02-E, page 2	-	0	Minus Lighting Control Credits NRCC-LTI-02-E, page 2	-	
04	Adjusted **Installed** Lighting Power (row 1 plus row 2 minus row 3)	=	8356	Adjusted **Installed** Lighting Power (row 1 minus row 3)	=	0
	Complies ONLY if **Installed** ≤ **Allowed** (Box 04 < Box 05)			Complies ONLY if **Installed** ≤ **Allowed** (Box 04 < Box 05)		
05	**Allowed** Lighting Power Conditioned NRCC-LTI-03-E, page 1 Alterations with replacement luminaires that have at least 50/35%lower power compared to the original existing luminaires, may instead use the allowed wattage from NRCC-LTI-06, page 2		16315	**Allowed** Lighting Power Unconditioned NRCC-LTI-03-E, page 1 Alterations with replacement luminaires that have at least 50/35% lower power compared to the original existing luminaires, may instead use the allowed wattage from NRCC-LTI-06, page 2		

D. Declaration of Required Certificates of Installation

Declare by selecting yes for all of the Certificates that will be submitted. (Retain copies and verify forms are completed and signed.)

YES	NO	Form/Title	
○	○	NRCI-LTI-01-E - Must be submitted for all buildings	☐ Field Inspector
○	○	NRCI-LTI-02-E - Must be submitted for a lighting control system, or for an Energy Management Control System (EMCS), to be recognized for compliance.	☐ Field Inspector
○	○	NRCI-LTI-03-E - Must be submitted for a line-voltage track lighting integral current limiter, or for a supplementary overcurrent protection panel used to energize only line-voltage track lighting, to be recognized for compliance.	☐ Field Inspector
○	○	NRCI-LTI-04-E - Must be submitted for two interlocked systems serving an auditorium, a convention center, a conference room, a multipurpose room, or a theater to be recognized for compliance.	☐ Field Inspector
○	○	NRCI-LTI-05-E - Must be submitted for a Power Adjustment Factor (PAF) to be recognized for compliance.	☐ Field Inspector
○	○	NRCI-LTI-06-E - Must be submitted for additional wattage installed in a video conferencing studio to be recognized for compliance.	☐ Field Inspector

STATE OF CALIFORNIA
INDOOR LIGHTING
CEC-NRCC-LTI-01-E (Revised 04/16) CALIFORNIA ENERGY COMMISSION

CERTIFICATE OF COMPLIANCE	NRCC-LTI-01-E
Indoor Lighting	(Page 3 of 6)
Project Name: CHET HARRITT ES	Date Prepared: 10/14/2019

E. Declaration of Required Certificates of Acceptance

Declare by selecting yes for all of the Certificates of Acceptance that will be submitted. (Retain copies and verify forms are completed and signed.)

YES	NO	FORM/TITLE	
○	○	NRCA-LTI-02-A - Must be submitted for occupancy sensors and automatic time switch controls.	☐ Field Inspector
○	○	NRCA-LTI-03-A - Must be submitted for automatic daylight controls.	☐ Field Inspector
○	○	NRCA-LTI-04-A - Must be submitted for demand responsive lighting controls.	☐ Field Inspector
○	○	NRCA-LTI-05-A - Must be submitted for institutional tuning power adjustment factor (PAF).	

A Separate Lighting Schedule Must Be Filled Out for Conditioned and Unconditioned Spaces. Installed Lighting Power listed on this Lighting Schedule is only for: ☑ CONDITIONED SPACE ☐ UNCONDITIONED SPACE

F. Indoor Lighting Schedule and Field Inspection Energy Checklist

☐ The actual indoor lighting power listed on the next 2 pages includes all installed permanent and planned portable lighting systems.
☐ When Complete Building Method is used for compliance, list each different type of luminaire on separate lines.
☐ When Area Category Method or Tailored Method is used for compliance, list each different type of luminaire by each different function area on separate lines
☐ Also include track lighting in schedule, and submit the track lighting compliance document (NRCC-LTI-05-E) when line-voltage track lighting is installed.

STATE OF CALIFORNIA
INDOOR LIGHTING
CEC-NRCC-LTI-01-E (Revised 04/16) CALIFORNIA ENERGY COMMISSION

CERTIFICATE OF COMPLIANCE	NRCC-LTI-01-E
Indoor Lighting	(Page 4 of 6)
Project Name: CHET HARRITT ES	Date Prepared: 10/14/2019

G. Installed Portable Luminaires in Offices – Exception to Section 140.6(a)

- This section shall be filled out ONLY for portable luminaires in offices (As defined in §100.1). All other planned portable luminaires shall be documented on next page of this compliance document.
- This section is used to determine if greater than 0.3 watts of portable lighting is planned for any office
- Fill out a separate line for each different office. Small offices that are typical (having the same general and portable lighting) may be grouped together. This allowance shall not be traded between offices having different lighting systems.

Office Portable Luminaire Schedule	Office Installed Portable Luminaire W/ft²							Office Location	Field Inspector	
01	02	03	04	05	06	07	08	09	10	
Complete Luminaire Description (i.e., LED, under cabinet, furniture mounted direct/indirect)	Watts per Luminaire	Number of Luminaires	Installed portable luminaire watts in this office (G02 x G03)	Square feet of this office	Watts per square foot (G04 / G05)	If G06 ≤ 0.3, enter zero; If G06 > 0.3, (G06-0.3)	(G05 x G07)	Identify Office area in which these portable luminaires are installed	Pass	Fail
			0				0		○	○
			0				0		○	○
			0				0		○	○
			0				0		○	○
			0				0		○	○
Total installed portable luminaire watts that are greater than 0.3 W/ft² per office:								Enter sum total of all pages into NRCC-LTI-01-E; Page 2		

STATE OF CALIFORNIA
INDOOR LIGHTING
CEC-NRCC-LTI-01-E (Revised 04/16) CALIFORNIA ENERGY COMMISSION

CERTIFICATE OF COMPLIANCE	NRCC-LTI-01-E
Indoor Lighting	(Page 5 of 6)
Project Name: CHET HARRITT ES	Date Prepared: 10/14/2019

A Separate Lighting Schedule Must Be Filled Out for Conditioned and Unconditioned Spaces. Installed Lighting Power listed on this Lighting Schedule is only for: ☑ CONDITIONED SPACE ☐ UNCONDITIONED SPACE

H. Indoor Lighting Schedule and Field Inspection Energy Checklist

Luminaire Schedule		Installed Watts					Location	Field Inspector[1]	
01	02	03	04		05	06	07	08	
Name or Item Tag	Complete Luminaire Description (i.e, 3 lamp fluorescent troffer, F32T8, one dimmable electronic ballast)	Watts per Luminaire	How wattage was determined: CEC Default from NA8	According to §130.0(c)	Number Luminaires	Total Installed Watts in this area (H03 xH05)	Primary Function area in which these luminaires are installed	Pass	Fail
A1	2' X 4' 39W Volumetric LED	39	☐	☑	106	4134	Classroom	○	○
B1	6" Dia. LED Open Downlight	41	☐	☑	21	861	Library/RR	○	○
B2	6" Dia. LED Open Downlight	69	☐	☑	24	1656	Library	○	○
D1	4' LED Surface Strip	25	☐	☑	5	125	Electrical	○	○
F1	4' x 4" W LED Recessed Linear	40	☐	☑	6	240	Restrooms	○	○
G1	4' Linear Suspended	25	☐	☑	19	475	Library	○	○
S1	6" Dia. LED Lensed Downlight	23	☐	☑	23	529	Corridor	○	○
S2	Wall Pack	28	☐	☐	12	336	Corridor	○	○
			☐	☐		0		○	○
INSTALLED WATTS PAGE TOTAL:						8356	Enter sum total of all pages into NRCC-LTI-01-E; Page 2		

STATE OF CALIFORNIA
INDOOR LIGHTING
CEC-NRCC-LTI-01-E (Revised 04/16) CALIFORNIA ENERGY COMMISSION

CERTIFICATE OF COMPLIANCE	NRCC-LTI-01-E
Indoor Lighting	(Page 6 of 6)
Project Name: CHET HARRITT ES	Date Prepared: 10/14/2019

DOCUMENTATION AUTHOR'S DECLARATION STATEMENT

1. I certify that this Certificate of Compliance documentation is accurate and complete.

Documentation Author Name: Monica Hansen	Documentation Author Signature: [signature]
Company: Johnson Consulting Engineers, Inc.	Signature Date: 10/14/2019
Address: 12875 Brookprinter Pl, Suite #300	CEA Certification Identification (if applicable):
City/State/Zip: Poway, CA 92064	Phone: 858-679-4030

RESPONSIBLE PERSON'S DECLARATION STATEMENT

I certify the following under penalty of perjury, under the laws of the State of California:
1. The information provided on this Certificate of Compliance is true and correct.
2. I am eligible under Division 3 of the Business and Professions Code to accept responsibility for the building design or system design identified on this Certificate of Compliance (responsible designer).
3. The energy features and performance specifications, materials, components, and manufactured devices for the building design or system design identified on this Certificate of Compliance conform to the requirements of Title 24, Part 1 and Part 6 of the California Code of Regulations.
4. The building design features or system design features identified on this Certificate of Compliance are consistent with the information provided on other applicable compliance documents, worksheets, calculations, plans and specifications submitted to the enforcement agency for approval with this building permit application.
5. I will ensure that a completed signed copy of this Certificate of Compliance shall be made available with the building permit(s) issued for the building, and made available to the enforcement agency for all applicable inspections. I understand that a completed signed copy of this Certificate of Compliance is required to be included with the documentation the builder provides to the building owner at occupancy.

Responsible Designer Name: Monica Hansen	Responsible Designer Signature: [signature]
Company: Johnson Consulting Engineers, Inc.	Date Signed: 10/14/2019
Address: 12875 Brookprinter Pl, Suite #300	License: E14781
City/State/Zip: Poway, CA 92064	Phone: 858-679-4030

STATE OF CALIFORNIA
INDOOR LIGHTING – LIGHTING CONTROLS
CEC-NRCC-LTI-02-E (Revised 01/16) CALIFORNIA ENERGY COMMISSION

CERTIFICATE OF COMPLIANCE	NRCC-LTI-02-E
Indoor Lighting - Lighting Controls	(Page 1 of 3)
Project Name: CHET HARRITT ES	Date Prepared: 10/14/2019

A. Mandatory Lighting Control Declaration Statements (Indicate if the measure applies by checking yes or no below.)

YES	NO	Control Requirements
◉	○	Lighting shall be controlled by self-contained lighting control devices which are certified to the Energy Commission according to the Title 20 Appliance Efficiency Regulations in accordance with Section 110.9.
◉	○	Lighting shall be controlled by a lighting control system or energy management control system in accordance with §110.9. An Installation Certificate shall be submitted in accordance with Section 130.4(b).
○	◉	One or more Track Lighting Integral Current Limiters shall be installed which have been certified to the Energy Commission in accordance with §110.9 and §130.0. Additionally, an Installation Certificate shall be submitted in accordance with Section 130.4(b).
○	◉	A Track Lighting Supplementary Overcurrent Protection Panel shall be installed in accordance with Section 110.9 and Section 130.0. Additionally, an Installation Certificate shall be installed in accordance with Section 130.4(b).
◉	○	All lighting controls and equipment shall comply with the applicable requirements in §110.9 and shall be installed in accordance with the manufacturer's instructions in accordance with Section 130.1.
◉	○	All luminaires shall be functionally controlled with manual ON and OFF lighting controls in accordance with Section 130.1(a).
◉	○	General lighting shall be separately controlled from all other lighting systems in an area. Floor and wall display, window display, case display, ornamental, and special effects lighting shall each be separately controlled on circuits that are 20 amps or less. When track lighting is used, general, display, ornamental, and special effects lighting shall each be separately controlled; in accordance with Section 130.1(a)4.
◉	○	The general lighting of any enclosed area 100 square feet or larger, with a connected lighting load that exceeds 0.5 watts per square foot shall meet the multi-level lighting control requirements in accordance with Section 130.1(b).
◉	○	All installed indoor lighting shall be equipped with controls that meet the applicable Shut-OFF control requirements in Section 130.1(c).
◉	○	Lighting in all Daylit Zones shall be controlled in accordance with the requirements in Section 130.1(d) and daylit zones are shown on the plans.
◉	○	Lighting power in buildings larger than 10,000 square feet shall be capable of being automatically reduced in response to a Demand Responsive Signal in accordance with Section 130.1(e).
◉	○	Before an occupancy permit is granted for a newly constructed building or area, or a new lighting system serving a building, area, or site is operated for normal use, indoor lighting controls serving the building, area, or site shall be certified as meeting the Acceptance Requirements for Code Compliance in accordance with Section 130.4.(a). The controls required to meet the Acceptance Requirements include automatic daylight controls, automatic shut-OFF controls, and demand responsive controls.

STATE OF CALIFORNIA
INDOOR LIGHTING – LIGHTING CONTROLS
CEC-NRCC-LTI-02-E (Revised 01/16) CALIFORNIA ENERGY COMMISSION

CERTIFICATE OF COMPLIANCE	NRCC-LTI-02-E
Indoor Lighting - Lighting Controls	(Page 2 of 3)
Project Name: CHET HARRITT ES	Date Prepared: 10/14/2019

A separate document must be filled out for Conditioned and Unconditioned Spaces. This page is used only for the following:
☑ CONDITIONED SPACES ☐ UNCONDITIONED SPACES

B. Mandatory and Prescriptive Indoor Lighting Control Schedule, PAF Calculation, and Field Inspection Checklist

Lighting Control Schedule			Standards Complying With[1] (✓ all that apply, or leave empty if Exempted)							PAF Credit Calculation[2]			✓ if Acceptance Test Required	Field Inspector	
01	02	03	04	05	06	07	08	09	10	11	12	13	14	15	
Location in Building	Type/ Description of Lighting Control (i.e.: occupancy sensor, automatic time switch, dimmer, automatic daylight, etc...)	# of Units	§130.1(a)	§130.0(b)	§130.1(c)	§130.1(d)	§130.1(e)	§140.6(a)2	§140.6(d)	Watts of Controlled Lighting	PAF	Control Credit (11 x 12)		Pass	Fail
STORAGE	OCCUPANCY SENSOR		◆	◆	◆							0	☐	○	○
RESTROOM	OCCUPANCY SENSOR/DAYLIGHT		◆	◆	◆							0	☐	○	○
CLASSROOM	OCCUPANCY SENSOR/DAYLIGHT		◆	◆	◆							0	☐	○	○
LIBRARY	OCCUPANCY SENSOR/DAYLIGHT		◆	◆	◆							0	☐	○	○
CORRIDOR	AUTO TIME SWITCH		◆	◆	◆							0	☐	○	○
CORRIDOR	DAYLIGHT											0	☐	○	○
												0	☐	○	○
Control Credit PAGE TOTAL (Sum of Column 13):												0			
IF MULTIPLE PAGES ARE USED, ENTER SUM TOTAL OF Control Credit for all pages HERE (Sum of all Column 13):															
												Enter Control Credit total into NRCC-LTI-01-E; Page 1.			

1. *§130.1(a) = Manual area controls; §130.0(b) = Multi Level; §130.1(c) = Auto Shut-Off; §130.1(d) = Mandatory Daylight; §130.1(e) = Demand Responsive; §140.6(d) = Additional lighting controls installed to earn a PAF; §140.6(d) = Prescriptive Secondary Sidelit Daylight Controls.*
2. *Check Table 140.6-A for correct Factor. PAFs shall not be traded between conditioned and unconditioned spaces. As a condition to earn a PAF, an Installation Certificate is also required to be filled out, signed, and submitted.*

STATE OF CALIFORNIA
INDOOR LIGHTING – LIGHTING CONTROLS
CEC-NRCC-LTI-02-E (Revised 01/16) CALIFORNIA ENERGY COMMISSION

CERTIFICATE OF COMPLIANCE	NRCC-LTI-02-E
Indoor Lighting - Lighting Controls	(Page 3 of 3)
Project Name: CHET HARRITT ES	Date Prepared: 10/14/2019

DOCUMENTATION AUTHOR'S DECLARATION STATEMENT

1. I certify that this Certificate of Compliance documentation is accurate and complete.

Documentation Author Name: Monica Hansen	Documentation Author Signature: [signature]
Company: Johnson Consulting Engineers, Inc.	Signature Date: 10/14/2019
Address: 12875 Brookprinter Pl, Suite #300	CEA Certification Identification (if applicable):
City/State/Zip: Poway, CA 92064	Phone: 858-679-4030

RESPONSIBLE PERSON'S DECLARATION STATEMENT

I certify the following under penalty of perjury, under the laws of the State of California:
1. The information provided on this Certificate of Compliance is true and correct.
2. I am eligible under Division 3 of the Business and Professions Code to accept responsibility for the building design or system design identified on this Certificate of Compliance (responsible designer).
3. The energy features and performance specifications, materials, components, and manufactured devices for the building design or system design identified on this Certificate of Compliance conform to the requirements of Title 24, Part 1 and Part 6 of the California Code of Regulations.
4. The building design features or system design features identified on this Certificate of Compliance are consistent with the information provided on other applicable compliance documents, worksheets, calculations, plans and specifications submitted to the enforcement agency for approval with this building permit application.
5. I will ensure that a completed signed copy of this Certificate of Compliance shall be made available with the building permit(s) issued for the building, and made available to the enforcement agency for all applicable inspections. I understand that a completed signed copy of this Certificate of Compliance is required to be included with the documentation the builder provides to the building owner at occupancy.

Responsible Designer Name: Monica Hansen	Responsible Designer Signature: [signature]
Company: Johnson Consulting Engineers, Inc.	Date Signed: 10/14/2019
Address: 12875 Brookprinter Pl, Suite #300	License: E14781
City/State/Zip: Poway, CA 92064	Phone: 858-679-4030

STATE OF CALIFORNIA
OUTDOOR LIGHTING
CEC-NRCC-LTO-01-E (Revised 04/16) CALIFORNIA ENERGY COMMISSION

CERTIFICATE OF COMPLIANCE	NRCC-LTO-01-E
Outdoor Lighting	(Page 1 of 4)
Project Name: CHET HARRITT ES	Date Prepared: 10/14/19

A. General Information

Project Address: 8120 ARLETTE ST, SANTEE, CA 92071			Total Illuminated Hardscape Area: 35530 SF	
Phase of Construction:	☑ New Construction	☐ Addition	☐ Alteration	
Outdoor Lighting Zone (LZ)	☐ LZ-1	☐ LZ-2	☑ LZ-3	☐ LZ-4
I have confirmed with the AHJ which LZ applies to this site. For default lighting zone designations, see Title 24 Part 6, §10-114				

B. Lighting Compliance Documents (check box for each document included)

For detailed instructions on the use of this and all Energy Efficiency Standards compliance documents, refer to the Nonresidential Manual published by the California Energy Commission.

☑	NRCC-LTO-01-E	Certificate of Compliance
☑	NRCC-LTO-02-E	Outdoor Lighting Controls Certificate of Compliance
☑	NRCC-LTO-03-E	Outdoor Lighting Power Allowance Certificate of Compliance
☐	NRCC-LTO-04-E	Outdoor Lighting Existing Conditions Certificate of Compliance

C. Summary of Allowed Outdoor Lighting Power

		Watts
01	**Sum Total ALLOWED** Outdoor Lighting Wattage from NRCC-LTO-03-E, page 1 Alterations with NO increase of connected lighting load may instead use the allowed wattage from NRCC-LTO-04, page 2.	3643
	Complies ONLY if **Installed** (Box 02) ≤ **Allowed** (Box 01)	
02	**Sum Total INSTALLED** Outdoor Lighting Wattage from NRCC-LTO-01-E, page 3.	2269

D. Declaration of Required Installation Certificates

Declare by checking all Installation Certificates that will be submitted. (Retain copies and verify compliance documents are completed and signed.)

☐ NRCI-LTO-01-E - Must be submitted for all buildings	☐ Field Inspector
☐ NRCI-LTO-02-E - Must be submitted for a lighting control system, or for an Energy Management Control System (EMCS), to be recognized for compliance.	☐ Field Inspector

E. Declaration of Required Certificates of Acceptance

Declare by checking all of the Certificates of Acceptance that will be submitted. (Retain copies and verify compliance documents are completed and signed.)

☐ NRCA-LTO-02-A - Must be submitted for outdoor lighting controls.	☐ Field Inspector

F. Schedule of Luminaires Exempt from the Outdoor Lighting Power Requirements in §140.7

01	02
Name or Symbol	Description of exempt luminaire in accordance with the exemptions

STATE OF CALIFORNIA
OUTDOOR LIGHTING
CEC-NRCC-LTO-01-E (Revised 04/16) CALIFORNIA ENERGY COMMISSION

CERTIFICATE OF COMPLIANCE	NRCC-LTO-01-E
Outdoor Lighting	(Page 2 of 4)
Project Name: CHET HARRITT ES	Date Prepared: 10/14/19

G. Schedule of Luminaires Exempt from the Cutoff Requirements in §130.2(b)

01	02
Name or Symbol	Description of exempt luminaire in accordance with the exemptions
S1, S2, S3	Less than 150W

H. Schedule of Luminaires Exempt from the Outdoor Lighting Control Requirements in §130.2(c)

01	02
Name or Symbol	Description of exempt luminaire in accordance with the exemptions
S1	NON-POLE LUMINAIRES WITH MAX WATTAGE OF 30W
S2	NON-POLE LUMINAIRES WITH MAX WATTAGE OF 30W

STATE OF CALIFORNIA
OUTDOOR LIGHTING
CEC-NRCC-LTO-01-E (Revised 04/16) CALIFORNIA ENERGY COMMISSION

CERTIFICATE OF COMPLIANCE	NRCC-LTO-01-E
Outdoor Lighting	(Page 3 of 4)
Project Name: CHET HARRITT ES	Date Prepared: 10/14/19

I. Outdoor Lighting Schedule and Field Inspection Energy Checklist

Luminaire Schedule		Installed Watts					Location	Cutoff	Field Inspector	
01	02	03	04		05	06	07	08	09	
Name or Item Tag	Complete Luminaire Description	Watts per Luminaire	How wattage was determined: CEC Default from NA8	According to §130.0(c)	Number of Luminaires	Total Installed Watts in this area (03 x 05)	Primary Function area in which these luminaires are installed (Outdoor Lighting Zone)	BUG Rating	Pass	Fail
S1 S2	6" LED DOWNLIGHT LED WALL PACK	23	☐	☑	27	621	EXTERIOR CORRIDOR PATH OF EGRESS	UH: UL: FVH: BVH: FH: BH:	○	○
S4	LED PARKING POLE	556	☐	☐	2	1112	PARKING LOT	UH: UL: FVH: BVH: FH: BH:	○	○
S5	LED WALKWAY POLE	134	☐	☐	4	536	EGRESS WALKWAY	UH: UL: FVH: BVH: FH: BH:	○	○
INSTALLED WATTS PAGE TOTAL:						2269	Enter sum total of all pages (**Sum Total INSTALLED** Outdoor lighting wattage) into NRCC-LTO-01-E; Page 1		2269	

STATE OF CALIFORNIA
OUTDOOR LIGHTING
CEC-NRCC-LTO-01-E (Revised 04/16) CALIFORNIA ENERGY COMMISSION

CERTIFICATE OF COMPLIANCE	NRCC-LTO-01-E
Outdoor Lighting	(Page 4 of 4)
Project Name: CHET HARRITT ES	Date Prepared: 10/14/19

DOCUMENTATION AUTHOR'S DECLARATION STATEMENT

1. I certify that this Certificate of Compliance documentation is accurate and complete.

Documentation Author Name: Monica Hansen	Documentation Author Signature: [signature]
Company: Johnson Consulting Engineers	Signature Date: 10/14/19
Address: 12875 Brookprinter Place, Suite 300	CEA Certification Identification (if applicable):
City/State/Zip: Poway, CA 92064	Phone: 858-679-4030

RESPONSIBLE PERSON'S DECLARATION STATEMENT

I certify the following under penalty of perjury, under the laws of the State of California:
1. The information provided on this Certificate of Compliance is true and correct.
2. I am eligible under Division 3 of the Business and Professions Code to accept responsibility for the building design or system design identified on this Certificate of Compliance (responsible designer).
3. The energy features and performance specifications, materials, components, and manufactured devices for the building design or system design identified on this Certificate of Compliance conform to the requirements of Title 24, Part 1 and Part 6 of the California Code of Regulations.
4. The building design features or system design features identified on this Certificate of Compliance are consistent with the information provided on other applicable compliance documents, worksheets, calculations, plans and specifications submitted to the enforcement agency for approval with this building permit application.
5. I will ensure that a completed signed copy of this Certificate of Compliance shall be made available with the building permit(s) issued for the building, and made available to the enforcement agency for all applicable inspections. I understand that a completed signed copy of this Certificate of Compliance is required to be included with the documentation the builder provides to the building owner at occupancy.

Responsible Designer Name: Monica Hansen	Responsible Designer Signature: [signature]
Company: Johnson Consulting Engineers	Date Signed: 10/14/19
Address: 12875 Brookprinter Place, Suite 300	License: E14781
City/State/Zip: Poway, CA 92064	Phone: 858-679-4030

STATE OF CALIFORNIA
OUTDOOR LIGHTING CONTROLS
CEC-NRCC-LTO-02-E (Revised 08/16) CALIFORNIA ENERGY COMMISSION

CERTIFICATE OF COMPLIANCE	NRCC-LTO-02-E
Outdoor Lighting Controls	(Page 1 of 3)
Project Name: CHET HARRITT ES	Date Prepared: 10/14/19

A. Mandatory Outdoor Lighting Control Declaration Statements

Check all that apply:
- ☑ Lighting shall be controlled by self-contained lighting control devices which are certified to the Energy Commission according to the Title 20 Appliance Efficiency Regulations in accordance with §110.9(a).
- ☑ Lighting shall be controlled by a lighting control system or energy management control system in accordance with §110.9. An Installation Certificate shall be submitted in accordance with §130.4(b).
- ☑ All lighting controls and equipment shall comply with the applicable requirements in §110.9 and shall be installed in accordance with the manufacturer's instructions in accordance with §130.0(d).
- ☐ Part-Night Outdoor Lighting Controls, as defined in Section 100.1(b), shall meet the requirements in Section 110.9(b)5.
- ☐ All outdoor incandescent luminaires rated over 100 watts, determined in accordance with Section 130.0(c), shall be controlled by a motion sensor.
- ☐ All outdoor luminaires rated for use with lamps greater than 150 lamp watts, determined in accordance with Section 130.0(c), shall comply with Uplight and Glare requirements in accordance with Section 130.2(b)
- ☑ All installed outdoor lighting shall be controlled by a photocontrol or outdoor astronomical time-switch control, or other control capable of automatically switching OFF in accordance with Section 130.2(c)1.
- ☑ All installed outdoor lighting shall be circuited and independently controlled from other electrical loads by an automatic scheduling control in accordance with Section 130.2(c)2.
- ☑ All installed outdoor lighting, where the bottom of the luminaire is mounted 24 feet or less above the ground, shall be controlled with automatic lighting controls in accordance with Section 130.2(c)3.
- ☐ For Outdoor Sales Frontage, an automatic lighting control shall be installed in accordance with Section 130.2(c)4.
- ☑ For Building Facade, Ornamental Hardscape and Outdoor Dining lighting, an automatic lighting control shall be installed in accordance with Section 130.2(c)5
- ☑ Before an occupancy permit is granted for the newly constructed building or for the addition, or for any altered outdoor lighting controls, shall be certified as meeting the Acceptance Requirements for Code Compliance in accordance with §130.4.(a). Outdoor lighting controls shall comply with the applicable requirements of Section 130.2(c) and Reference Nonresidential Appendix NA7.8.

STATE OF CALIFORNIA
OUTDOOR LIGHTING CONTROLS
CEC-NRCC-LTO-02-E (Revised 08/16) CALIFORNIA ENERGY COMMISSION

CERTIFICATE OF COMPLIANCE	NRCC-LTO-02-E
Outdoor Lighting Controls	(Page 2 of 3)
Project Name: CHET HARRITT ES	Date Prepared: 10/14/19

B. Mandatory Outdoor Lighting Control Schedule and Field Inspection Checklist

Outdoor Lighting Control Schedule			Standards Complying With (✓ all that apply, or leave empty if Exempted)						✓ if Acceptance Test Required	Field Inspector	
01	02	03	04	05	06	07	08	09	10	11	
Location and Application of Luminaires Being Controlled	Type/ Description of Lighting Control (i.e. outdoor motion sensor, outdoor photocontrol, outdoor astronomical time-switch control, automatic scheduling control, part-night outdoor lighting control)	# of Units	§130.2(a)	§130.2(c)1	§130.2(c)2	§130.2(c)3	§130.2(c)4	§130.2(c)5		Pass	Fail
EXTERIOR CORRIDOR	AUTOMATIC SCHEDULING CONTROL/PHOTOCELL			◆	◆				☐	○	○
PATH OF EGRESS WALKWAY	AUTOMATIC SCHEDULING CONTROL/PHOTOCELL			◆	◆				☐	○	○
PARKING LOT	AUTOMATIC SCHEDULING								☐	○	○

STATE OF CALIFORNIA
OUTDOOR LIGHTING CONTROLS
CEC-NRCC-LTO-02-E (Revised 08/16) CALIFORNIA ENERGY COMMISSION

CERTIFICATE OF COMPLIANCE	NRCC-LTO-02-E
Outdoor Lighting Controls	(Page 3 of 3)
Project Name: CHET HARRITT ES	Date Prepared: 10/14/19

DOCUMENTATION AUTHOR'S DECLARATION STATEMENT

1. I certify that this Certificate of Compliance documentation is accurate and complete.

Documentation Author Name: Monica Hansen	Documentation Author Signature: [signature]
Company: Johnson Consulting Engineers	Signature Date: 10/14/2019
Address: 12875 Brookprinter Place, Suite 300	CEA Certification Identification (if applicable):
City/State/Zip: Poway, CA 92064	Phone: 858-679-4030

RESPONSIBLE PERSON'S DECLARATION STATEMENT

I certify the following under penalty of perjury, under the laws of the State of California:
1. The information provided on this Certificate of Compliance is true and correct.
2. I am eligible under Division 3 of the Business and Professions Code to accept responsibility for the building design or system design identified on this Certificate of Compliance (responsible designer).
3. The energy features and performance specifications, materials, components, and manufactured devices for the building design or system design identified on this Certificate of Compliance conform to the requirements of Title 24, Part 1 and Part 6 of the California Code of Regulations.
4. The building design features or system design features identified on this Certificate of Compliance are consistent with the information provided on other applicable compliance documents, worksheets, calculations, plans and specifications submitted to the enforcement agency for approval with this building permit application.
5. I will ensure that a completed signed copy of this Certificate of Compliance shall be made available with the building permit(s) issued for the building, and made available to the enforcement agency for all applicable inspections. I understand that a completed signed copy of this Certificate of Compliance is required to be included with the documentation the builder provides to the building owner at occupancy.

Responsible Designer Name: Monica Hansen	Responsible Designer Signature: [signature]
Company: Johnson Consulting Engneers	Date Signed: 10/14/2019
Address: 12875 Brookprinter Place, Suite 300	License: E14781
City/State/Zip: Poway, CA 92064	Phone: 858-679-4030

IDENTIFICATION STAMP
DIV. OF THE STATE ARCHITECT
APP. 04-118693 INC:
REVIEWED FOR
SS ☑ FLS ☑ ACS ☑
DATE: 03.13.2020

Date
Revison
Consultant
Engineer

studioWC
ARCHITECTURE + ENGINEERING
515 Encinitas Blvd. Ste. 201, Encinitas, California 92024
Telephone: (760)753-6800 Fax: (760)452-7541

LICENSED ARCHITECT
ROBERT D. WEBB A.I.A.
C-28036
OCTOBER 31, 2021
STATE OF CALIFORNIA

CHET. HARRITT ELEM. SCHOOL
LRC & CLASSROOM ADDITION
SANTEE SCHOOL DISTRICT

TITLE 24 - INDOOR, OUTDOOR & POWER DISTRIBUTION

Drawn: Author
Checked: Checker
Date:
Job: SSD-CFH-05

E2.0.0

REGISTERED PROFESSIONAL ENGINEER
MONICA GOESE-HANSEN
NO.E 14781
Exp. 6-30-2021
ELECTRICAL
STATE OF CALIFORNIA

JOHNSON
CONSULTING ENGINEERS, INC.
Power | Lighting | Multimedia
Communications | Data Networking
12875 Brookprinter Place, Suite 300
Poway, CA 92064
P 858.679.4030 | F 858.513.0559
www.jce-inc.com

#19033 2/13/2020 2:00:08 PM

IDENTIFICATION STAMP
DIV. OF THE STATE ARCHITECT
APP. 04-118693 INC:
REVIEWED FOR
SS ☑ FLS ☑ ACS ☑
DATE: 03.13.2020

GENERAL NOTES:

1. REFERENCE ARCHITECTURAL REFLECTED CEILING PLANS FOR EXACT LOCATION OF ALL LIGHTING FIXTURES.
2. REFERENCE E2 SERIES SHEETS FOR ALL FIXTURE TYPES AND FOR TYPICAL DETAILS.
3. REFERENCE E8 SERIES SHEETS FOR TYPICAL CONDUIT AND BACKBOX INSTALLATION DETAILS.
4. LETTERS IN OR ADJACENT TO EACH FIXTURE OR FIXTURE ROW INDICATES SWITCH AND OR OCCUPANCY SENSOR WHICH CONTROLS THE LIGHTING FIXTURE.
5. CIRCUIT HOMERUNS ARE INDICATED TO SHOW THE LOCATION AND NUMBER OF CIRCUITS TO BE GROUPED TOGETHER.
6. PROVIDE MINIMUM 3/4" CONDUIT AND #10 CIRCUIT CONDUCTORS AS REQUIRED TO CONNECT EACH LIGHTING FIXTURES TO THEIR INDICATED CONTROL DEVICES. (U.O.N.)

KEY NOTES:

1. SEE ARCHITECTURAL PLANS FOR MOUNTING HEIGHT.
2. 2 #10 (HOT), 1 #10 (NEUTRAL), 1 #10 (GND), 1/2"C.
3. 3 #10 (HOT), 1 #10 (NEUTRAL), 1 #10 (GND), 1/2"C.
4. 4 #10 (HOT), 2 #10 (NEUTRAL), 1 #10 (GND), 3/4"C.
5. SOLATUBE
6. SOLATUBE NOT DIMMED - IN EXTERIOR CORRIDOR.
7. CONTROL CKT 19 VIA PHOTOCELL AND CKT 21 VIA TIME CLOCK IN LIGHTING CONTROL PANEL 'LCP-D'.
8. CONTROL VIA TIMECLOCK IN LIGHTING CONTROL PANEL 'LCP-D'

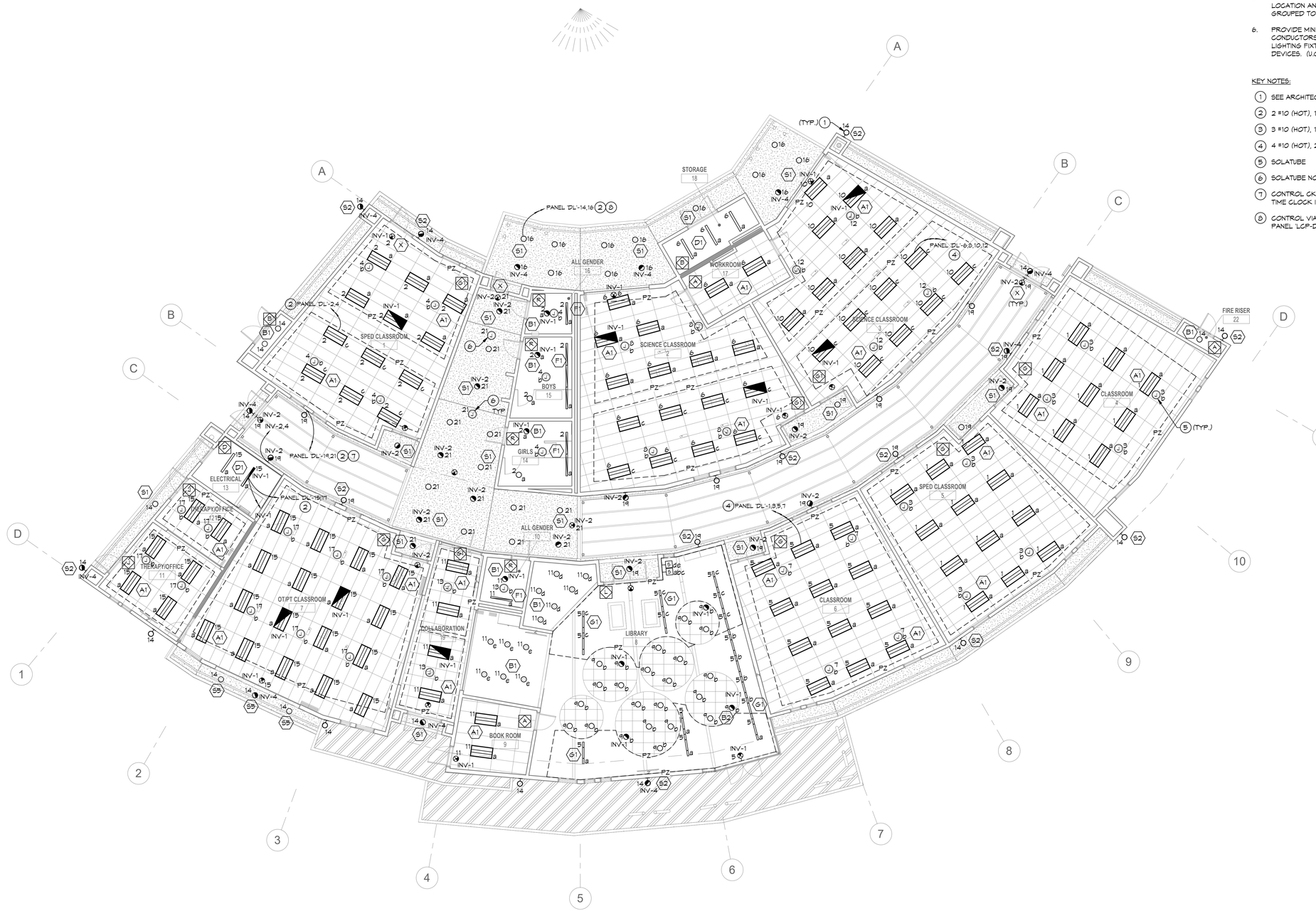

LEVEL 1 FLOOR PLAN - LIGHTING | 1/8" = 1'-0" | 1

JOHNSON
CONSULTING ENGINEERS, INC.
Power | Lighting | Multimedia
Communications | Data Networking
12875 Brookprinter Place, Suite 300
Poway, CA 92064
P 858.679.4030 | F 858.513.0559
www.jce-inc.com

REGISTERED PROFESSIONAL ENGINEER
NO.E 14781
Exp. 6-30-2021
ELECTRICAL
STATE OF CALIFORNIA

#19033 2/14/2020 9:11:15 AM

Revison | Date

Consultant

Engineer

studiowc
ARCHITECTURE + ENGINEERING
515 Encinitas Blvd, Ste. 201, Encinitas, California 92024
Telephone: (760)753-6800 Fax: (760)452-7541

LICENSED ARCHITECT
ROBERT D. WEBB AJA
C-28036
OCTOBER 31, 2021
STATE OF CALIFORNIA

CHET. HARRITT ELEM. SCHOOL
LRC & CLASSROOM ADDITION
SANTEE SCHOOL DISTRICT

LIGHTING FLOOR PLAN

Drawn: Author
Checked: Checker
Date:
Job: SSD-CFH-05

E2.1

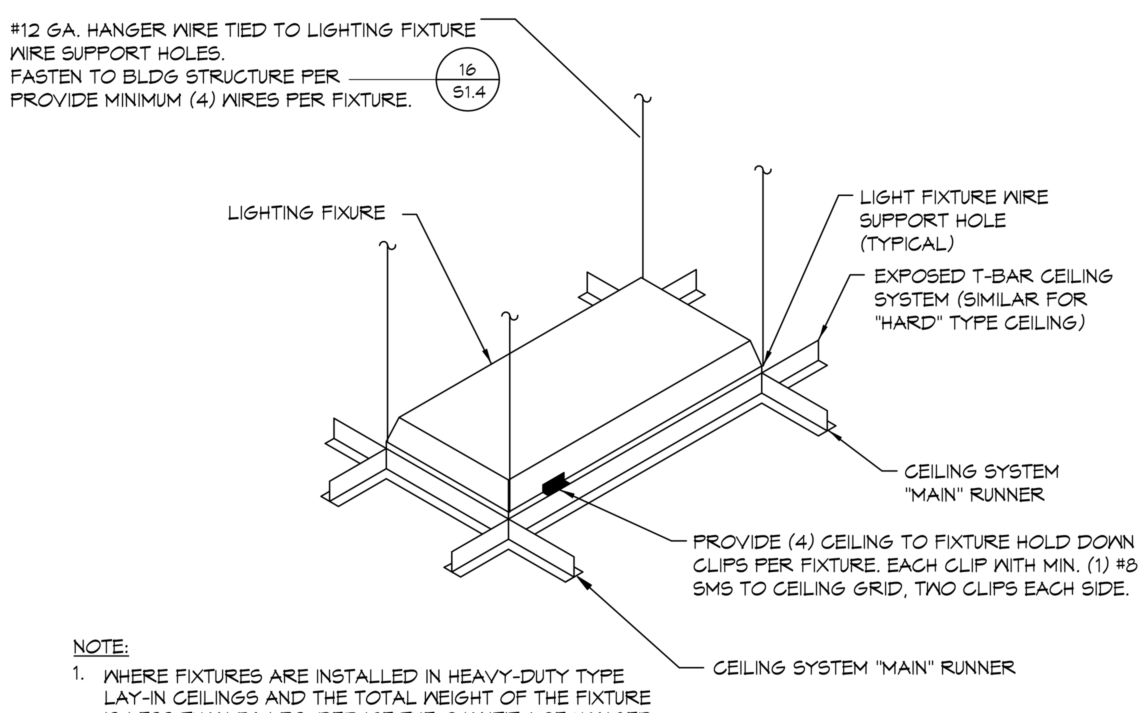

NOTE:

1. WHERE FIXTURES ARE INSTALLED IN HEAVY-DUTY TYPE LAY-IN CEILINGS AND THE TOTAL WEIGHT OF THE FIXTURE IS LESS THAN 56 LBS. REDUCE THE QUANTITY OF HANGER WIRES TO (2) SLACK WIRES AT DIAGONAL CORNERS.
2. REFERENCE ARCHITECTURAL PLANS FOR ADDITIONAL CEILING ANCHORAGE REQUIREMENTS.

FLUORESCENT FIXTURE SEISMIC RESTRAINT DETAIL (1/E2.2)

NO SCALE

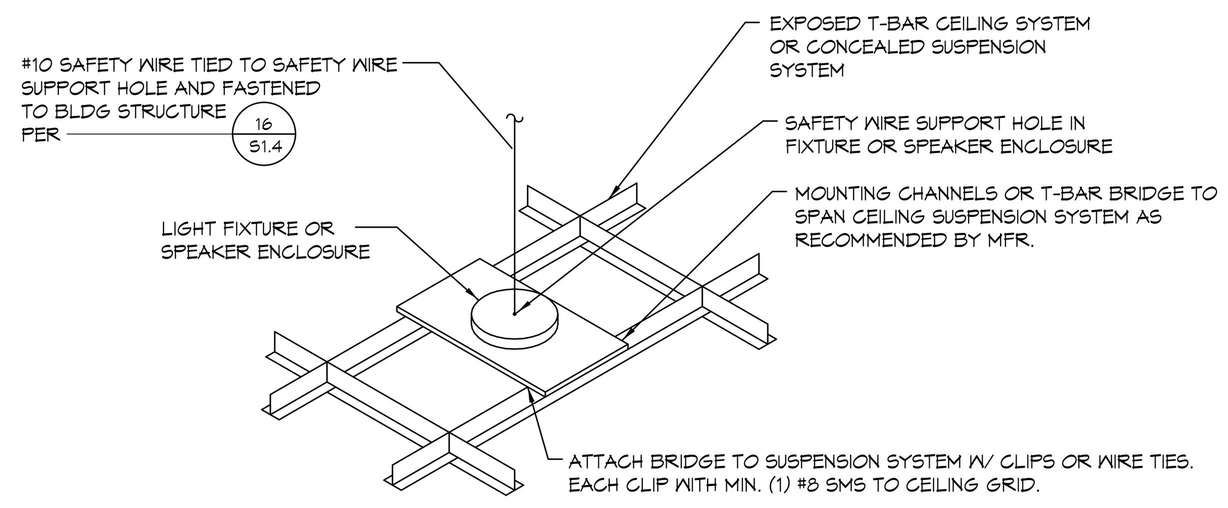

LUMINAIRE AND SPEAKER ENCLOSURE SEISMIC RESTRAINT DETAIL (2/E2.2)

NO SCALE

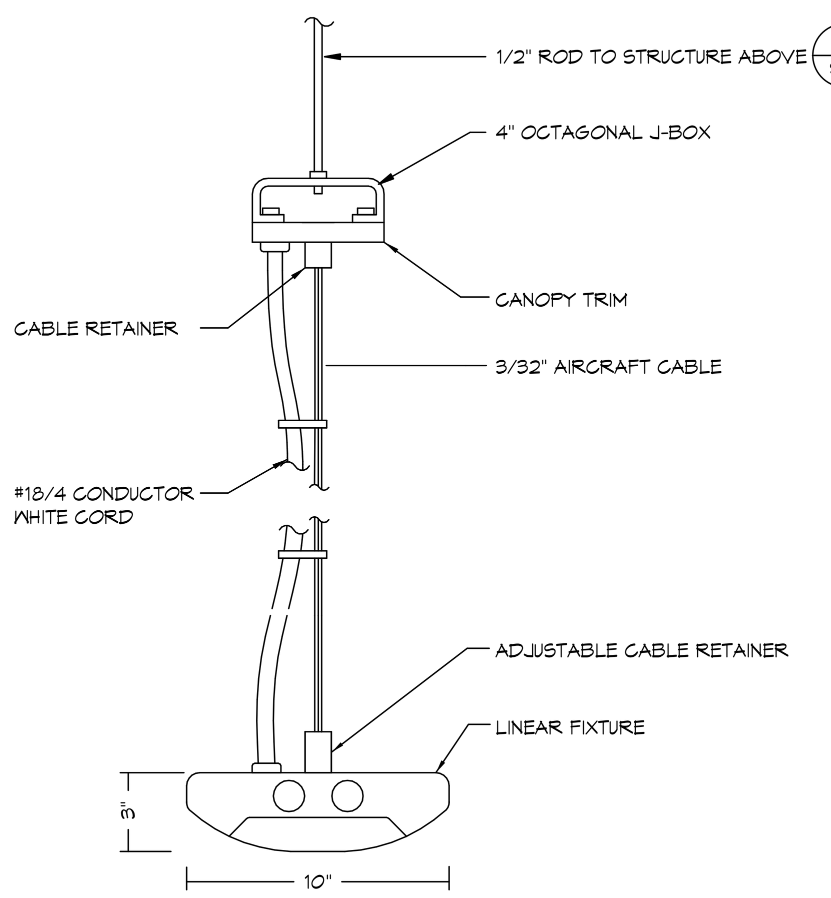

PENDANT HUNG LINEAR FIXTURE MOUNTING (3/E2.2)

NO SCALE

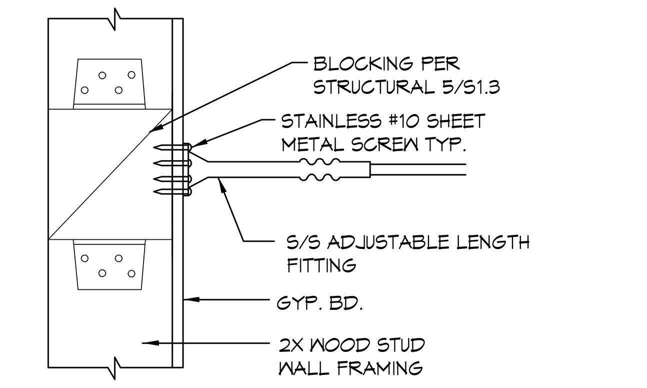

WALL ATTACHMENT (A)

NO SCALE

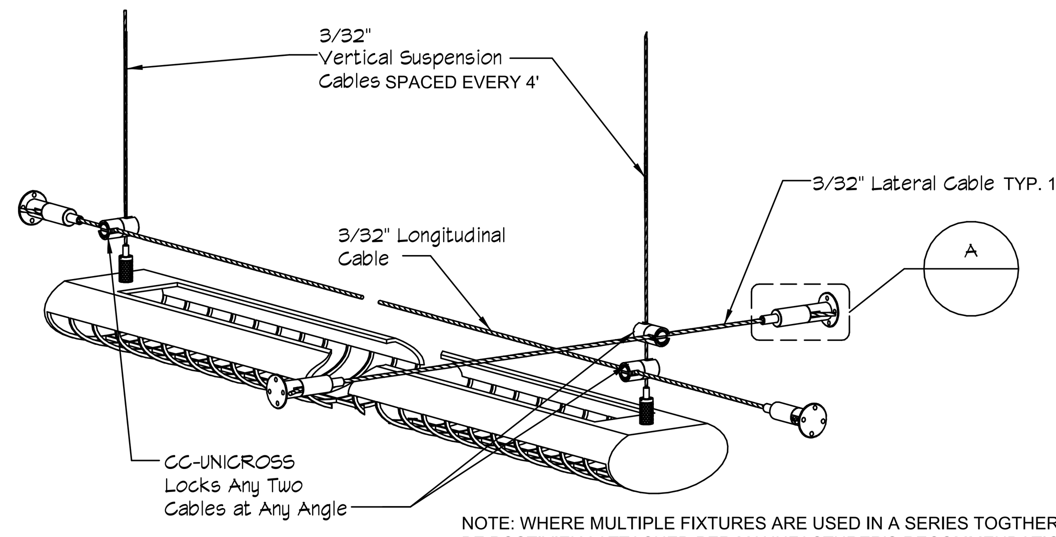

NOTE: WHERE MULTIPLE FIXTURES ARE USED IN A SERIES TOGTHER, FIXTURES SHALL BE POSTIVIELY ATTACHED PER MANUFACTURER'S RECOMMENDATION.

PENDANT HUNG FIXTURE SEISMIC RESTRAINT (4/E2.2)

NO SCALE

LIGHTING FIXTURE SCHEDULE

Mounting columns: Recessed / Ceiling, Surface / Ceiling, Wall, Recessed / Wall, Pendant, Surface / Wall, Pole

Mark	Approved Manufacturer's (See Key Note No. 1)	Catalog Series Type (See Key Note No. 2)	Fixture: OTHER	Fixture: LED	Driver	Fixture Watts	Mounting	Description	Provide Emergency Ballast Type 'EM'	Provide Custom Color Finish, to be selected at time submittal	See Detail
A1	LITHONIA DAY-BRITE	2VTL SERIES FLUX GRID 2X4	☐	■	■ 120/277v ■ 0-10v Dim	39.1w	Recessed / Ceiling	2'X4' VOLUMETRIC T-GRID WITH ACRYLIC LINEAR PRISMATIC DIFFUSER. MINIMUM 4800 LUMEN AT 5000K. DRIVER VOLTAGE UNIVERSAL	☐	☐	■ 1/E2.2
B1	LITHONIA INTENSE	LDN6 6" GRAVITY	☐	■	■ 120/277v ■ 0-10v Dim	41w	Recessed / Ceiling	6" DIAMETER OPEN DOWNLIGHT 3000 LUMEN AT 5000K SEMI SPECULAR DIFFUSER	☐	☐	☐
B2	LITHONIA INTENSE	LDN6 6" GRAVITY	☐	■	■ 120/277v ■ 0-10v Dim	69w	Recessed / Ceiling	SAME AS TYPE 'B1' EXCEPT 5000 LUMEN AT 5000K	☐	☐	☐
D1	LITHONIA DAY-BRITE	CLX SERIES FLUX STREAM	☐	■	■ 120/277v ■ 0-10v Dim	25w	Surface / Ceiling	48" SURFACE STRIP, CEILING MOUNTED. FLAT DIFFUSER LENS. MINIMUM 4000 LUMEN AT 5000K	☐	☐	☐
F1	MARK BIRCHWOOD	SLOT 4 LED JAKE	☐	■	■ 120/277v ■ 0-10v Dim	40w	Recessed / Ceiling	48"L X 4"W RECESSED LINEAR FLUSH LENS. MINIMUM 4000 LUMEN AT 5000K	☐	☐	☐
G1	LITHONIA PRUDENTIAL	GRAD LINEAR SERIES PRU 15	☐	■	■ 120/277v ■ 0-10v Dim	25w	Pendant	4 FT LINEAR DIRECT/INDIRECT 83-80% DOWN, 17-20% UP SUSPENDED 4000 LUMEN AT 5000K BOTTOM OF FIXTURE 15'-3" A.F.F.	☐	☐	■ 3/E2.2
S1	GOTHAM COVENTRY PHILIPS LIGHTOLIER	EVO 6" 6LB79VWL SERIES CALCULITE GEN 3	☐	■	■ 120/277v ■ 0-10v Dim	23w	Recessed / Ceiling	6" DIA. 3000 LUMEN AT 5000K WET LOCATION LISTED. VANDAL RESISTANT PRISMATIC POLYCARBONATE.	☐	☐	☐
S2	NLS LIGHTING	TRAC WALL MOUNT SLOPE	☐	■	■ 120/277v ■ 0-10v Dim	28w	Surface / Wall	EXTERIOR WALL SCONCE - SLOPE SHAPE. WET LOCATION LISTED. TYPE 3 DISTRIBUTION. MINIMUM 3500 LUMEN AT 5000K BRONZE FINISH. SEE ARCH. FOR MOUNTING HEIGHT.	☐	☐	☐
S3	KIM LIGHTING	CCS 25 SERIES	☐	■	■ 120/277v ■ 0-10v Dim	228w Per Head	Pole	25" ARM MOUNTED CURVILINEAR WITH TYPE 3 DISTRIBUTION. MINIMUM 21,038 LUMENS PER HEAD AT 5000K. 22'-6" ROUND ALUMINUM POLE DESIGNED FOR 110 MPH WIND SPEED. BRONZE FINISH. TWO HEADS PER POLE. NO SUBSTITUTIONS, MATCH EXISTING.	☐	☐	■ 1/E2.4
S4	KIM LIGHTING	CCS 17 SERIES	☐	■	■ 120/277v ■ 0-10v Dim	67w Per Head	Pole	17" ARM MOUNTED CURVILINEAR WITH TYPE 4 DISTRIBUTION AND MOTION SENSOR OPTION FOR DIMMING. MINIMUM 6000 LUMENS PER HEAD AND 5000K. ROUND ALUMINUM POLE DESIGNED FOR 110 MPH WIND SPEED. BRONZE FINISH. 15'-0" OVERALL MOUNTING HEIGHT. TWO HEADS PER POLE. NO SUBSTITUTIONS, MATCH EXISTING.	☐	☐	■ 2/E2.4
X	COOPER EXITRONIX	APX SERIES ILLUMINEX SERIES	☐	■	■ 120/277v ☐ 0-10v Dim	1	Surface / Ceiling	SURFACE MOUNT WHITE THERMOPLASTIC LED EXIT SIGN. GREEN LETTERING	☐	☐	☐

LIGHTING FIXTURE SCHEDULE KEY NOTES:

1. ALTERNATE MANUFACTURER'S TO THOSE SPECIFIED MAY BE SUBMITTED FOR APPROVAL. ALTERNATE MANUFACTURER'S MUST MEET THE MINIMUM CRITERIA INDICATED IN THE DESCRIPTION AND OPTIONS COLUMNS OF THIS SCHEDULE, AND MUST BE EQUAL TO THE SPECIFIED FIXTURE AS DETERMINED BY THE SPECIFYING ENGINEER. (ALTERNATE FIXTURES MUST BE APPROVED PRIOR TO BID, ALLOW 72 HOURS FOR ENGINEER REVIEW AND APPROVED). WHERE 'NO KNOWN EQUAL' IS INDICATED THE FIXTURE DOES NOT HAVE AN EQUAL TO MEET THE PROJECT REQUIREMENTS, AND ALTERNATE SELECTIONS WILL NOT BE ACCEPTED.
2. COMPLETE CATALOG NUMBERS HAVE NOT BEEN PROVIDED, REFERENCE THE DESCRIPTION AND OPTIONS COLUMNS OF THIS SCHEDULE FOR COMPLETE FIXTURE REQUIREMENTS.

IDENTIFICATION STAMP
DIV. OF THE STATE ARCHITECT
APP. 04-118693 INC:
REVIEWED FOR
SS ☑ FLS ☑ ACS ☑
DATE: 03.13.2020

Date | Revison | Consultant | Engineer

studioWC
ARCHITECTURE + ENGINEERING
515 Encinitas Blvd. Ste. 201, Encinitas, California 92024
Telephone: (760)753-6800 Fax: (760)452-7541

LICENSED ARCHITECT ROBERT D. WEBB A.I.A. C-28036 OCTOBER 31, 2021 STATE OF CALIFORNIA

REGISTERED PROFESSIONAL ENGINEER MONICA GOESE-HANSEN NO.E 14781 Exp. 6-30-2021 ELECTRICAL STATE OF CALIFORNIA

JOHNSON CONSULTING ENGINEERS, INC.
Power | Lighting | Multimedia
Communications | Data Networking
12875 Brookprinter Place, Suite 300
Poway, CA 92064
P 858.679.4030 | F 858.513.0559
www.jce-inc.com

#19033 2/13/2020 2:00:17 PM

CHET. HARRITT ELEM. SCHOOL
LRC & CLASSROOM ADDITION
SANTEE SCHOOL DISTRICT

LIGHTING SCHEDULE & DETAILS

Drawn: Author
Checked: Checker
Date:
Job: SSD-CFH-05

E2.2

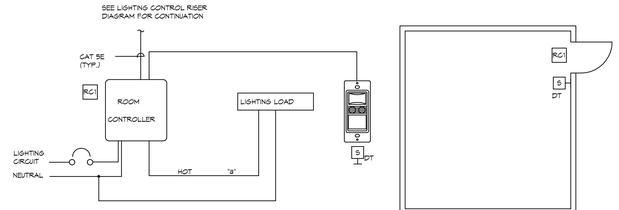

TYPICAL ROOM TYPE - STORAGE/RESTROOM

NO SCALE

4 | 1 E2.3

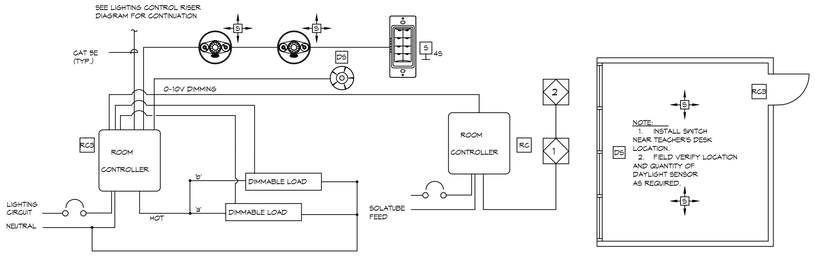

TYPICAL ROOM TYPE - CLASSROOM WITH SOLATUBES

NO SCALE

G | 6 E2.3

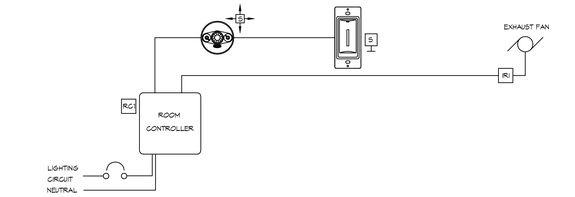

TYPICAL ROOM TYPE - RESTROOM

NO SCALE

B | 2 E2.3

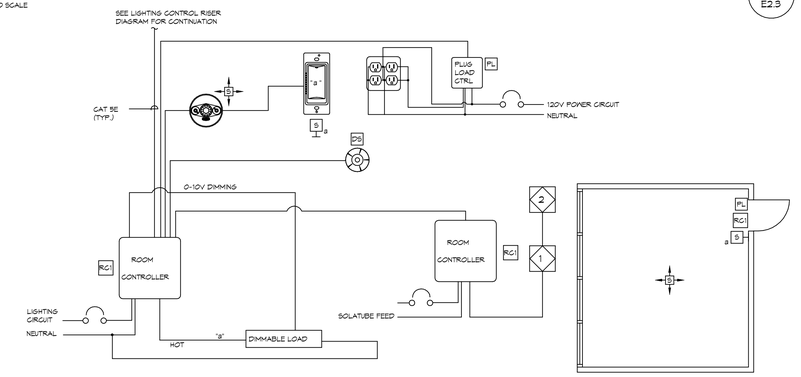

TYPICAL ROOM TYPE - OFFICE W/ SOLATUBES

NO SCALE

J | 7 E2.3

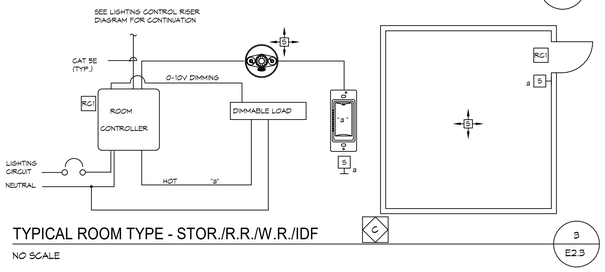

TYPICAL ROOM TYPE - STOR./R.R./W.R./IDF

NO SCALE

C | 3 E2.3

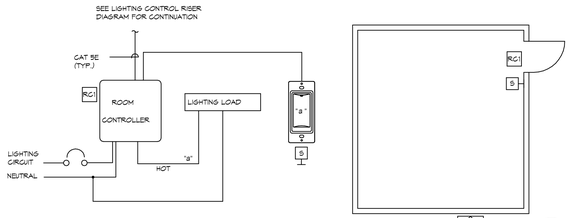

TYPICAL ROOM TYPE - ELECTRICAL/EQUIPMENT ROOM

NO SCALE

D | 4 E2.3

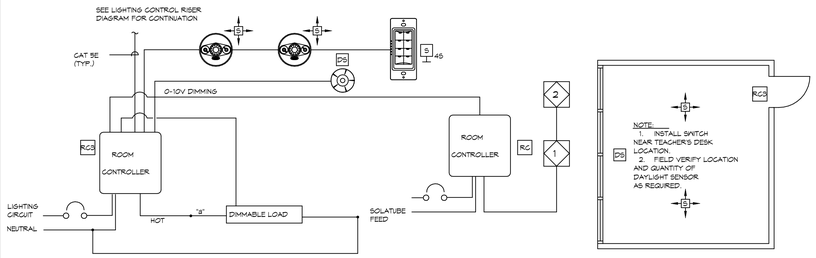

TYPICAL ROOM TYPE - CLASSROOM WITH SOLATUBES

NO SCALE

G | 5 E2.3

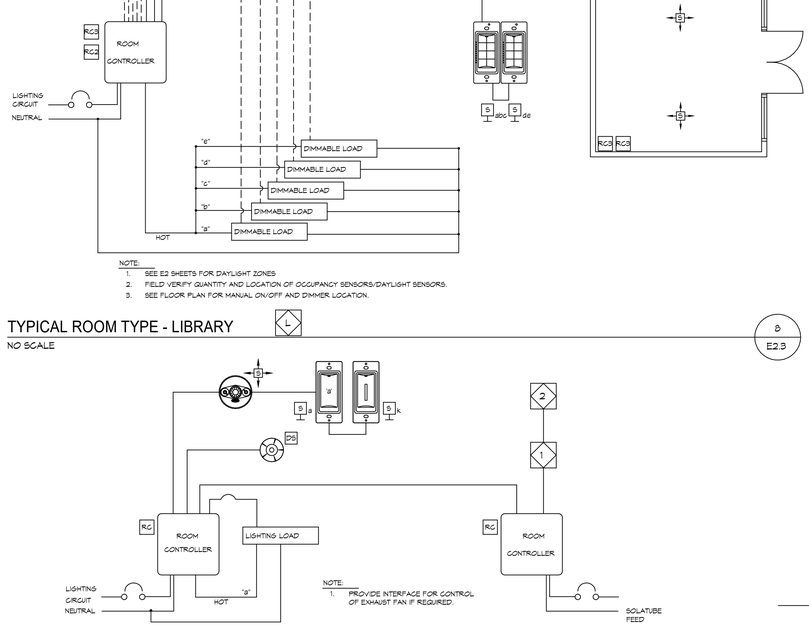

NOTE:
1. SEE E2 SHEETS FOR DAYLIGHT ZONES.
2. FIELD VERIFY QUANTITY AND LOCATION OF OCCUPANCY SENSORS/DAYLIGHT SENSORS.
3. SEE FLOOR PLAN FOR MANUAL ON/OFF AND DIMMER LOCATION.

TYPICAL ROOM TYPE - LIBRARY

NO SCALE

L | 8 E2.3

TYPICAL ROOM TYPE - RESTROOM WITH SOLATUBES

NO SCALE

R | 9 E2.3

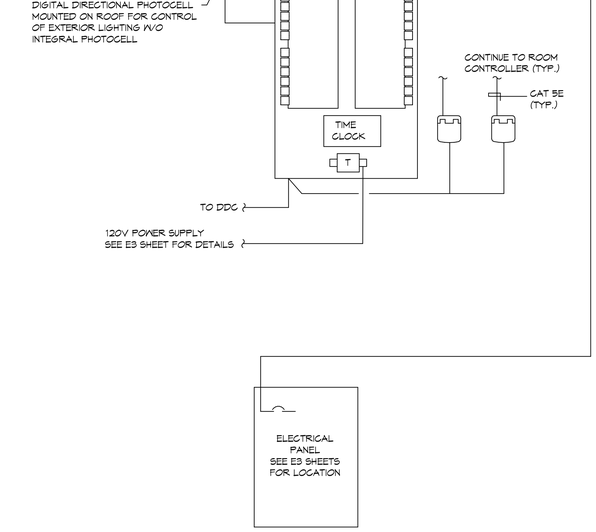

NETWORK LIGHTING CONTROL DIAGRAM

NO SCALE

10 E2.3

SYMBOL LEGEND

S	WALL MOUNTED MANUAL ON AND OFF SWITCH +48" U.O.N.
S DT	WALL MOUNTED DUAL TECH MOTION SENSOR WITH MANUAL ON AND OFF +48" U.O.N.
	CEILING MOUNTED MOTION SENSOR (DUAL TECHNOLOGY)
S	WALL MOUNTED MOTION SENSOR (DUAL TECH) +84" U.O.N.
RC1	SINGLE CIRCUIT ROOM CONTROLLER FOR ROOMS WITH ONE DIMMING ZONE.
RC2	SINGLE CIRCUIT ROOM CONTROLLER FOR ROOMS WITH TWO DIMMING ZONES.
RC3	SINGLE CIRCUIT ROOM CONTROLLER FOR ROOMS WITH THREE DIMMING ZONES.
PL	PLUG LOAD CONTROLLER
DS	DAYLIGHT SENSOR
IR1	ISOLATED RELAY INTERFACE
S 4S	4 SCENE DIMMING CONTROL STATION
S K	MANUAL ON AND OFF KEY SWITCH
S a	MAIN ENTRY MANUAL ON AND OFF WITH DIMMER FOR ZONE 'a'
S ab	MAIN ENTRY MANUAL ON AND OFF WITH DIMMER FOR ZONE 'a' & 'b'
S abc	MAIN ENTRY MANUAL ON AND OFF WITH DIMMER FOR ZONE 'a' & 'b' & 'c'
S abc	MAIN ENTRY MANUAL DIMMERS FOR ZONE 'a', 'b' & 'c'
1	20A POWER CONTROLLER RELAY (R1B01P)
2	SOLATUBE DIMMER CONTROLLER. REFER TO MANUFACTURER'S WIRING DIAGRAM FOR ADDITIONAL INFO.

GENERAL NOTES

1. REFERENCE SPECIFICATION SECTION 260923 DIGITAL LIGHTING CONTROL SYSTEM FOR ADDITIONAL SCOPE OF WORK.
2. ITEMS RC1 RC2 RC3 PL TO BE WALL MOUNTED ABOVE THE ROOM ENTRY DOOR, ABOVE THE CEILING IN ALL ROOMS WITH T-BAR CEILINGS.
3. ITEMS RC1 RC2 RC3 PL TO BE LOCATED WITHIN A 24" x 24" RECESSED ENCLOSURE WITH HINGED LOCKING COVER LOCATED ABOVE THE ROOM ENTRY DOOR IN ALL ROOMS WITH INACCESSIBLE CEILINGS.
4. ALL 0-10V WIRING AND CAT 5E WIRING MAY BE INSTALLED AS OPEN WIRE WHERE ABOVE ACCESSIBLE CEILINGS. WHERE ABOVE INACCESSIBLE OR EXPOSED CEILINGS IT SHALL BE INSTALLED IN CONDUIT.
5. WHERE CEILING HEIGHT EXCEED 11'-0" OR ROOM HAS EXPOSED S CEILING PROVIDE TYPE SENSOR MOUNTED ON WALL IN PLACE OF CEILING SENSOR.
6. REFERENCE 4 / E2.4 FOR LIGHTING ON EMERGENCY SYSTEM.
7. LIGHTING IN CORRIDORS AND STAIRWELLS SHALL BE REDUCED BY AT LEAST 50% WHEN THE AREA IS UNOCCUPIED.

IDENTIFICATION STAMP
DIV. OF THE STATE ARCHITECT
APP. 04-118693 INC:
REVIEWED FOR
SS ☑ FLS ☑ ACS ☑
DATE: 03.13.2020

Revison	Date

Consultant

Engineer

studiowc
ARCHITECTURE + ENGINEERING
515 Encinitas Blvd, Ste 201, Encinitas, California 92024
Telephone: (760) 634-8880 Fax: (760) 452-7341

LICENSED ARCHITECT
ROBERT D. WEBB
C-28036
OCTOBER 31, 2021
STATE OF CALIFORNIA

CHET. HARRITT ELEM. SCHOOL
LRC & CLASSROOM ADDITION
SANTEE SCHOOL DISTRICT

LIGHTING CONTROL DIAGRAMS

Drawn: Author
Checked: Checker
Date:
Job: SSD-CFH-05

E2.3

REGISTERED PROFESSIONAL ENGINEER
MICHAEL REESE HANSEN
NO. E 14781
Exp. 6-30-2021
ELECTRICAL
STATE OF CALIFORNIA

JOHNSON
CONSULTING ENGINEERS, INC.
Power | Lighting | Multimedia
Communications | Data Networking
12875 Brookprinter Place, Suite 300
Poway, CA 92064
P 858.679.4030 | F 858.513.0559
www.jce-inc.com

#19033 2/13/2020 2:00:19 PM

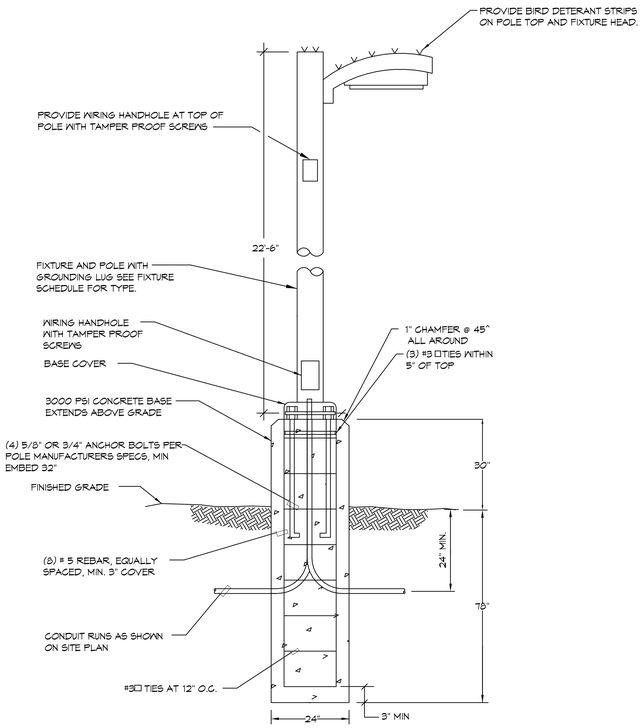

CONCRETE BASE AND POLE DETAIL — 1 / E2.4
NO SCALE

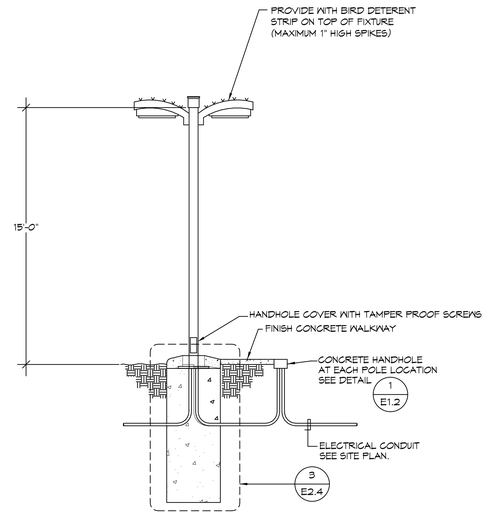

POLE DETAIL — 2 / E2.4
NO SCALE

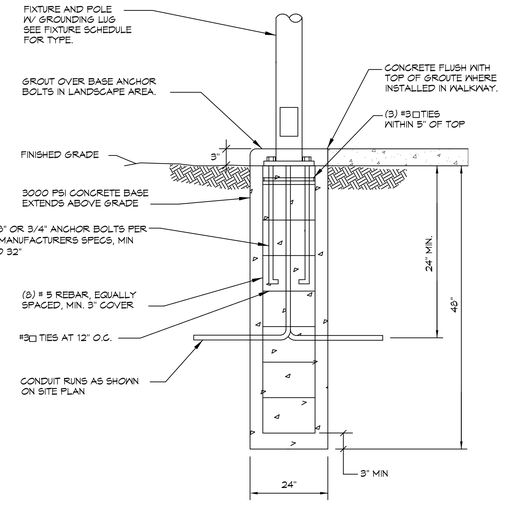

POLE BASE DETAIL — 3 / E2.4
NO SCALE

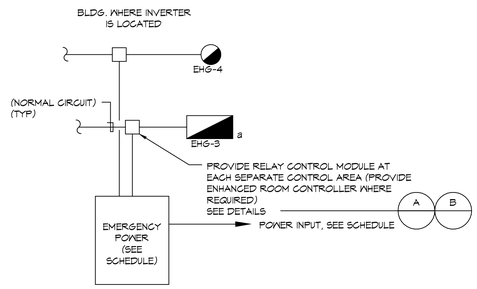

EMERGENCY POWER CONFIGURATION DIAGRAM — 4 / E2.4
NO SCALE

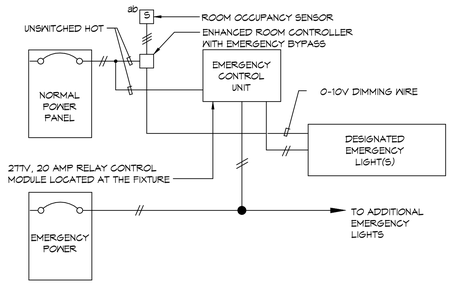

FIXTURE WIRING DIAGRAM (ROOM SENSOR AND/OR LOCAL SWITCH) — A

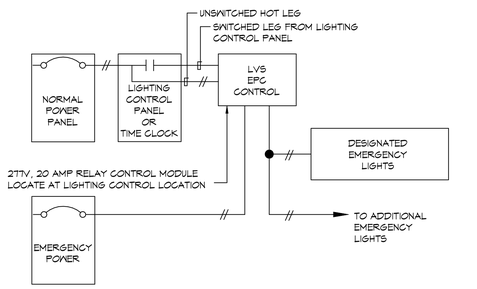

FIXTURE WIRING DIAGRAM (LOW VOLTAGE CONTROL SYSTEM) — B

INVERTER SCHEDULE

CENTRAL INVERTER LOCATION	INVERTER I.D.	INVERTER TYPE I.D. (SEE SCHEDULE BELOW)	OUTPUT CIRCUITS	REMARKS
BUILDING 'D'	'INV'	'INV20'	INV-1, INV-2, INV-4	

INVERTER TYPE SCHEDULE

I.D.	MINIMUM KVA RATING:	*INPUT BREAKER: (VOLTAGE/POLES)	*OUTPUT BREAKER: (REFERENCE PLANS FOR QTY. REQUIRED)	**MAXIMUM ENCLOSURE SIZE: WIDTH x HEIGHT x DEPTH (WEIGHT)	NOTES:
'INV20'	2.0	25A (120/1) / 15A (277/1)	(4) 20 AMP / 1 POLE (MAX.)	FLOOR MOUNTED (1) 26"W x 10"H x 10"D - CONTROL (4) 26"W x 10"H x 10"D - BATTERY	*VALUES SHOWN ON SCHEDULE ARE BASED ON MYERS PRODUCTS. CONTRACTOR SHALL BE RESPONSIBLE FOR VERIFYING INPUT/OUTPUT REQUIREMENTS WHEN NON-MYERS PRODUCTS ARE USED. **MAXIMUM DIMENSIONS AND WEIGHTS BASED ON APPROVED MANUFACTRERS PRODUCTS. SEE SPECIFICATIONS.

EMERGENCY LIGHTING CONTROL DIAGRAM — 5 / E2.4
NO SCALE

NOTE: LIGHT POLES LESS THAN 35 FT ABOVE GRADE ARE EXEMPT FROM DSA REVIEW.

IDENTIFICATION STAMP
DIV. OF THE STATE ARCHITECT
APP. 04-118693 INC:
REVIEWED FOR
SS ☑ FLS ☑ ACS ☑
DATE: 03.13.2020

Revison	Date

Consultant

Engineer

studiowc
ARCHITECTURE + ENGINEERING
515 Encinitas Blvd, Ste 201, Encinitas, California 92024
Telephone: (760) 634-8880 Fax: (760) 452-7341

LICENSED ARCHITECT
ROBERT D. WEBB
C-28036
OCTOBER 31, 2021
STATE OF CALIFORNIA

CHET. HARRITT ELEM. SCHOOL
LRC & CLASSROOM ADDITION
SANTEE SCHOOL DISTRICT

LIGHTING DETAIL

Drawn: Author
Checked: Checker
Date:
Job: SSD-CFH-05

E2.4

JOHNSON CONSULTING ENGINEERS, INC.
Power | Lighting | Multimedia
Communications | Data Networking
12875 Brookprinter Place, Suite 300
Poway, CA 92064
P 858.679.4030 | F 858.513.0559
www.jce-inc.com

REGISTERED PROFESSIONAL ENGINEER
MICHAEL REESE HANSEN
No.E 14781
Exp. 6-30-2021
ELECTRICAL
STATE OF CALIFORNIA

#19033 2/13/2020 2:00:21 PM

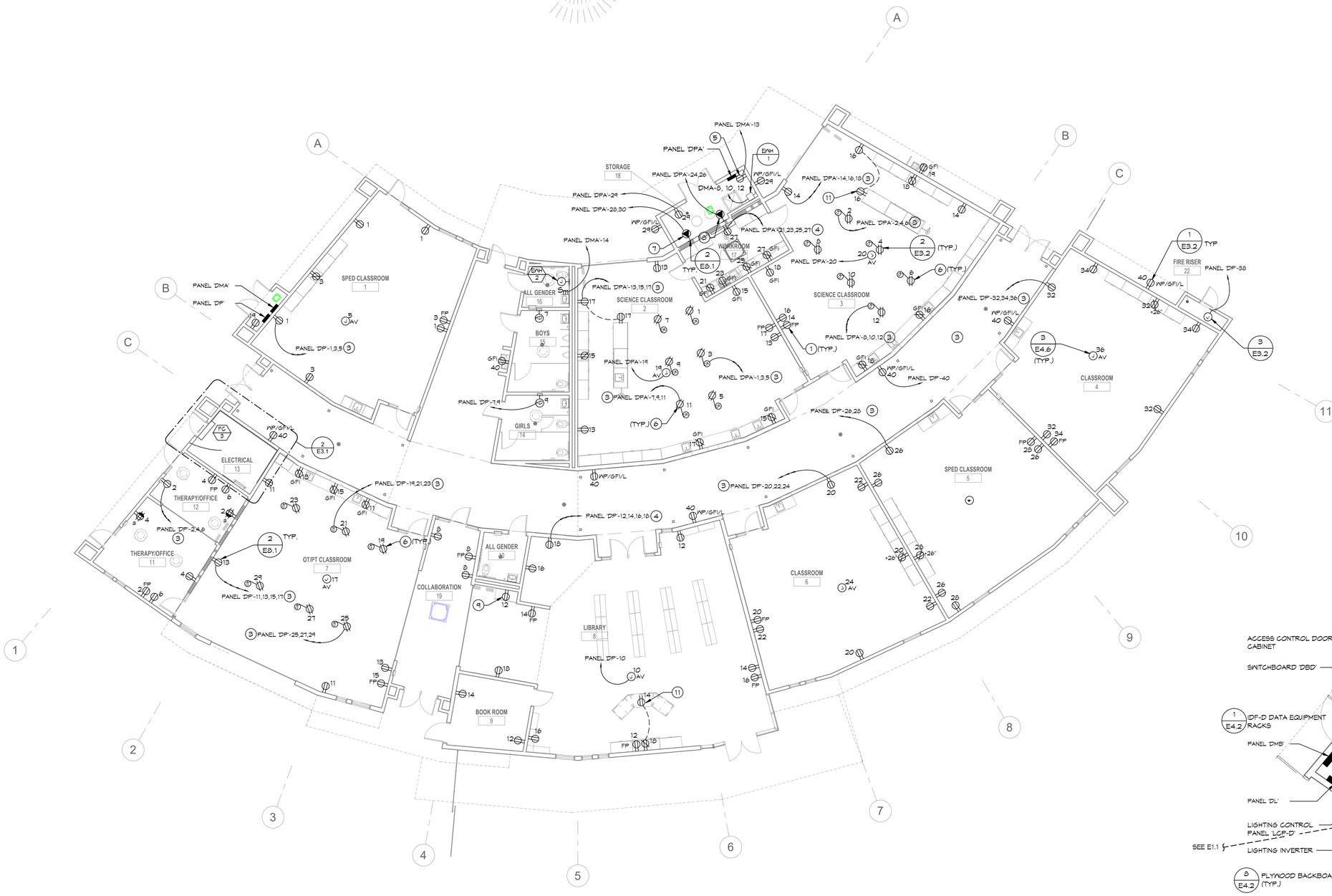

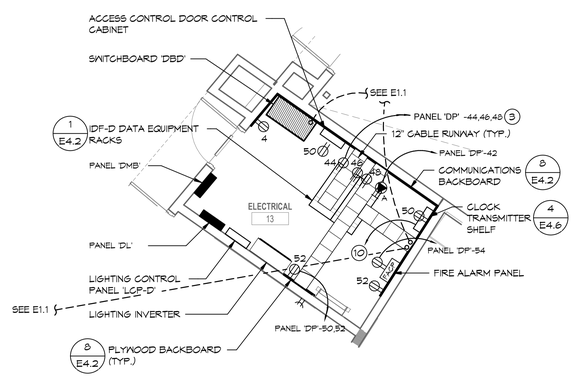

ENLARGED ELECTRICAL ROOM | 1/4" = 1'-0" | 2

LEVEL 1 FLOOR PLAN - POWER | 1/8" = 1'-0" | 1

GENERAL NOTES:

1. REFERENCE ARCHITECTURAL INTERIOR ELEVATIONS FOR EXACT LOCATION OF ALL WALL MOUNTED POWER DEVICES WHERE INDICATED AT MOUNTING HEIGHTS OTHER THAN +18".
2. REFERENCE SHEET E6 SERIES SHEETS FOR MECHANICAL EQUIPMENT SCHEDULE.
3. REFERENCE E5 AND E8 SERIES SHEETS FOR TYPICAL CONDUIT AND BACKBOX INSTALLATION DETAILS.
4. NUMBERS ADJACENT TO EACH POWER DEVICE INDICATES THE CIRCUIT NUMBER TO WHICH THE DEVICE IS TO BE CONNECTED.
5. CIRCUIT HOMERUNS ARE INDICATED TO SHOW THE LOCATION AND NUMBER OF CIRCUITS TO BE GROUPED TOGETHER.
6. PROVIDE MINIMUM 1/2" CONDUIT AND #12 CIRCUIT CONDUCTORS AS REQUIRED TO CONNECT EACH POWER DEVICE TO THEIR INDICATED CIRCUIT (U.O.N.).
7. FIELD VERIFY EXACT ROUTING LOCATION FOR CONCEALED CONDUITS AND RECEPTACLES PRIOR TO ROUGH-IN.

KEY NOTES:

1. FIELD VERIFY EXACT LOCATION & MOUNTING HEIGHT WITH ARCHITECT PRIOR TO ROUGH-IN.
2. 2 #12 (HOT), 1 #10 (NEUTRAL), 1 #12 (GND), 3/4"C.
3. 3 #12 (HOT), 1 #10 (NEUTRAL), 1 #12 (GND), 3/4"C.
4. 4 #12 (HOT), 2 #10 (NEUTRAL), 1 #12 (GND), 3/4"C.
5. RECEPTACLE FOR CIRC. PUMP CP-1
6. BLACK CEILING MOUNTED CORD REEL WITH TRIPLE TAP OUTLET AS MANUFACTURED BY HUBBELL #HBLC40123TT
7. NEMA 6-50R RECEPTACLE FOR KILN
8. NEMA 6-30R RECEPTACLE FOR KILN
9. MOUNT INSIDE CABINET. SEE ARCHITECTURAL DETAILS.
10. PROVIDE 1 1/4" RIGID CONDUIT TO ROOF FOR CLOCK TRANSMITTER GPS RECEIVER AND ANTENNA. EXTEND CONDUIT A MINIMUM OF 36" ABOVE ROOFLINE. PROVIDE WEATHERHEAD FOR CONDUIT.
11. MOUNTED IN MILLWORK, COORDINATE EXACT MOUNTING HEIGHT AND LOCATION WITH ARCH.

IDENTIFICATION STAMP
DIV. OF THE STATE ARCHITECT
APP. 04-118693 INC:
REVIEWED FOR
SS ☑ FLS ☑ ACS ☑
DATE: 03.13.2020

Revison	Date

Consultant

Engineer

studiowc
ARCHITECTURE + ENGINEERING
515 Encinitas Blvd, Ste 201, Encinitas, California 92024
Telephone: (760) 634-8880 Fax: (760) 452-7341

LICENSED ARCHITECT
ROBERT D. WEBB
C-28036
OCTOBER 31, 2021
STATE OF CALIFORNIA

CHET. HARRITT ELEM. SCHOOL
LRC & CLASSROOM ADDITION
SANTEE SCHOOL DISTRICT

POWER FLOOR PLAN

Drawn: Author
Checked: Checker
Date:
Job: SSD-CFH-05

E3.1

JOHNSON
CONSULTING ENGINEERS, INC.
Power | Lighting | Multimedia
Communications | Data Networking
12875 Brookprinter Place, Suite 300
Poway, CA 92064
P 858.679.4030 | F 858.513.0559
www.jce-inc.com

REGISTERED PROFESSIONAL ENGINEER
MICHAEL CROSSE-HARRIS
NO. E 14781
Exp. 6-30-2021
ELECTRICAL
STATE OF CALIFORNIA

#19033
2/13/2020 2:00:21 PM

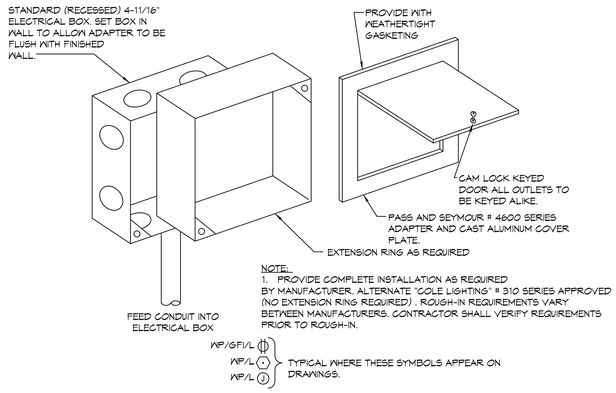

NOTE:
1. PROVIDE COMPLETE INSTALLATION AS REQUIRED BY MANUFACTURER. ALTERNATE "COLE LIGHTING" # 310 SERIES APPROVED (NO EXTENSION RING REQUIRED) . ROUGH-IN REQUIREMENTS VARY BETWEEN MANUFACTURERS. CONTRACTOR SHALL VERIFY REQUIREMENTS PRIOR TO ROUGH-IN.

TYPICAL WEATHERPROOF/LOCKING RECEPTACLE COVER

NO SCALE

1 / E3.2

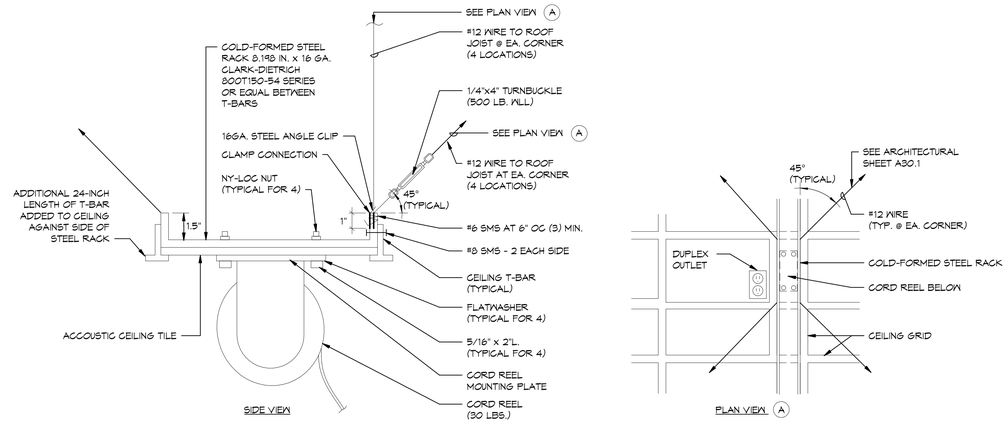

CORD REEL ANCHORAGE DETAIL

NO SCALE

2 / E3.2

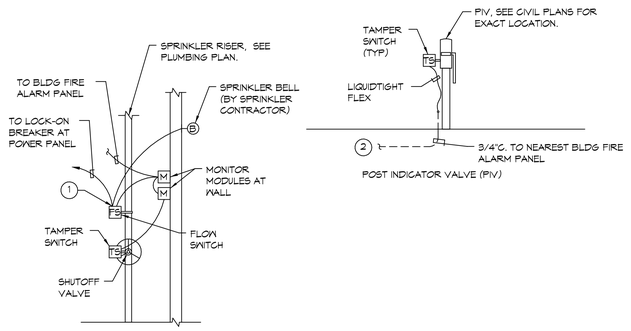

KEY NOTES:

1. TAMPER SWITCH AUXILIARY CONTACTS TO ACTIVATE SPRINKLER BELL.
2. PROVIDE CONNECTION TO MONITOR MODULE LOCATED IN FIRE RISER ROOM OR ABOVE NEAREST ACCESSIBLE CEILING IN NEAREST BUILDING.

TYPICAL FIRE SPRINKLER SYSTEM CONNECTION DETAILS

NO SCALE

3 / E3.2

JOHNSON CONSULTING ENGINEERS, INC.
Power | Lighting | Multimedia
Communications | Data Networking
12875 Brookprinter Place, Suite 300
Poway, CA 92064
P 858.679.4030 | F 858.513.0559
www.jce-inc.com

REGISTERED PROFESSIONAL ENGINEER
PHILIP GOESE-HANSEN
NO.E 14781
Exp. 6-30-2021
ELECTRICAL
STATE OF CALIFORNIA

#19033 2/13/2020 2:00:22 PM

IDENTIFICATION STAMP
DIV. OF THE STATE ARCHITECT
APP. 04-118693 INC:
REVIEWED FOR
SS ☑ FLS ☑ ACS ☑
DATE: 03.13.2020

Revison	Date

Consultant

Engineer

studiowc
ARCHITECTURE + ENGINEERING
515 Encinitas Blvd, Ste. 201, Encinitas, California 92024
Telephone: (760)753-6800 Fax: (760)452-7541

LICENSED ARCHITECT
ROBERT D. WEBB AJA
C-28036
OCTOBER 31, 2021
STATE OF CALIFORNIA

CHET. HARRITT ELEM. SCHOOL
LRC & CLASSROOM ADDITION
SANTEE SCHOOL DISTRICT

POWER DETAILS

Drawn: Author
Checked: Checker
Date:
Job: SSD-CFH-05

E3.2

BACKBOX AND RING LEGEND

TYPE	DESCRIPTION
'B1'	4 11/16" square 2 1/8" deep box with single gang ring.
'B2'	4 11/16" square 2 1/8" deep box with dual gang ring.
'B3'	4" square 1 1/2" deep box with single gang ring.
'B4'	Single gang box, 2 1/8" deep.
'B5'	4-11/16" Square 3" deep box with dual gang ring.

'C1'	Provided by 27 10 00 contractor.
'C2'	Provided by 27 21 00 contractor.
'C3'	Provided by 27 20 00 contractor.
'C4'	Provided by 27 51 16 contractor.
'C5'	Provided by 28 13 00 contractor.
'C6'	Provided by 28 23 00 contractor.
'C7'	Provided by xx xx xx contractor.

FACEPLATE LEGEND

TYPE	DESCRIPTION
'AR'	As required to accommodate the number of ports designated.
'BP'	Blank faceplate.

'C1'	Provided by 27 10 00 contractor.
'C2'	Provided by 27 21 00 contractor.
'C3'	Provided by 27 20 00 contractor.
'C4'	Provided by 27 51 16 contractor.
'C5'	Provided by 28 13 00 contractor.
'C6'	Provided by 28 23 00 contractor.
'C7'	Provided by xx xx xx contractor.

CONDUIT / RACEWAY LEGEND

TYPE	DESCRIPTION
'3/4-S'	3/4" conduit stubbed from box into accessible ceiling space, unless detailed otherwise on drawings.
'1-S'	1" conduit stubbed from box into accessible ceiling space, unless detailed otherwise on drawings.
'11/4-S'	1 1/4" conduit stubbed from box into accessible ceiling space, unless detailed otherwise on drawings.

TECHNOLOGY SYMBOL LEGEND

SYMBOL	DESCRIPTION	BACKBOX & RING	FACE PLATE	CONDUIT / RACEWAY
	Single port data outlet, +18" A.F.F. (U.O.N.)	Type 'B1'	Type 'AR'	Type '1-S'
2P	Dual port data outlet, +18" A.F.F. (U.O.N.)	Type 'B1'	Type 'AR'	Type '1-S'
3P	Triple port data outlet, +18" A.F.F. (U.O.N.)	Type 'B1'	Type 'AR'	Type '1-S'
4P	Quad port data outlet, +18" A.F.F. (U.O.N.)	Type 'B1'	Type 'AR'	Type '1-S'
1V	Single port data outlet with single port voice outlet, +18" A.F.F. (U.O.N.)	Type 'B1'	Type 'AR'	Type '1-S'
LO 2P	Local Origination with Dual Port Data, +18" AFF (U.O.N.)	Type 'B1' (D) Type 'B5' (LO) Side by Side (1)	Type 'AR' (D) Type 'C3' (LO)	Type '1-S' (D) Type '1 1/4-S' (LO)
	Same device as required on legend, mounted +6" above backsplash (U.O.N.)	Same as required for device indicated on legend.	Same as required for device indicated on legend.	Same as required for device indicated on legend.
S	Same device as required on legend, except surface mounted box.	Same as required for device indicated on legend.	Same as required for device indicated on legend.	Same as required for device indicated on legend.
	Same device as required on legend, except in floor box.	Floorbox per E3 series drawings.	Same as required for device indicated on legend.	Same as required for device indicated on legend.
AP 4P AV	Quad port data outlet for Wireless Access Point and AV Equipment Mounted in Ceiling AV Enclosure.	Type 'B1' Provide Box with Ceiling Grid Hangar.	Type 'C1'	Type '1-S'
AP 4P AV	Quad port data outlet for Wireless Access Point and AV Equipment Mounted in Wall AV Enclosure @8'-0" AFF.	Type 'B1'	Type 'C1'	Type '1-S'
LCD	Ceiling Mounted Projector Location.	Type 'B1' Provide Box with Ceiling Grid Hangar.	Type 'C3' 2/E4.5	Type '1-S' Not require in accessible ceiling.
S	Ceiling Mounted Audio-Visual System Speaker.	Type 'C3'	Type 'C3'	
AP 2P	Dual port data outlet at wireless access point location mounted in accessible ceiling (U.O.N.)	See detail 2/E4.4	Type 'C1'	Not required in accessible ceiling.
AP 2P	Dual port data outlet at wireless access point wall mounted @+8'-0" AFF (U.O.N.)	See detail 2/E4.4	Type 'C1'	Type '1-S'
AP 2P WP (2)	Dual port data outlet for exterior WAP Location @10'-0" AFF (U.O.N.) WP = Weatherproof	See Details 1/E4.4	See Details 1/E4.4 (2)	Type '1-S' Not required in accessible ceiling.
FP	Dual port data outlet for Flat Panel Location with Audio-Visual Connections. Height per details.	Type 'B1' (Data) Type 'B2' (A/V) 2/E4.7 -/---	Type 'C1' (Data) Type 'C3' (A/V) 2/E4.7 -/---	Type '1-S' (Data) Type '1 1/4-S' (A/V)
AV	Ceiling Mounted Audio-Visual Enclosure.	Not required in accessible ceiling.	Type 'C3'	Not required in accessible ceiling.

COMMUNICATION / SECURITY SYMBOL LEGEND

SYMBOL	DESCRIPTION	BACKBOX & RING	FACE PLATE	CONDUIT / RACEWAY
W	Telephone outlet with staff type phone, +18" A.F.F. (U.O.N.) (W indicates wall mount at +48" A.F.F.) Height per detail 1/E1.0	Type 'B3'	Type 'C1'	Type '3/4-S'
W	Telephone outlet with classroom type phone, +18" A.F.F. (U.O.N.) (W indicates wall mount at +48" A.F.F.) Height per detail 1/E1.0	Type 'B3'	Type 'C1'	Type '3/4-S'
S	IP-Based Intercom Speaker recessed in ceiling.	Type 'C1'	Type 'C1'	Type '3/4-S'
S	IP-Based Intercom Speaker, recessed in wall, +8'-0" A.F.F (U.O.N.)	Type 'C1', installed by electrical contractor. 5/E4.4	Type 'C1' 5/E4.4	Type '3/4-S'
S	IP-Based Intercom Speaker, surface mount on interior wall, +8'-0" A.F.F (U.O.N.)	Type 'B3' (3)	Type 'C1' (3)	Type '3/4-S'
S	IP-Based Intercom Horn recessed in exterior wall @ +8'-0" AFF (U.O.N.)	Type 'C1', installed by electrical contractor. (4)	Type 'C1'	Type '3/4-S'
V	Volume control for intercom system, mounted at +48" A.F.F. (U.O.N.) Height per detail 1/E1.0	Type 'B3'	Type 'C1' (3)	Type '3/4-S'
WG	Clock wall mounted at, +8'-0" A.F.F (U.O.N.). (WG indicates wireguard)	Not required. (4)	Not required.	Not required.
K	Security keypad wall mounted at +48" A.F.F (U.O.N.) Height per detail 1/E1.0	Type 'B2'	Type 'C5'	Type '3/4-S'
	Security motion sensor ceiling mounted.	Type 'B3'	Type 'C5'	Type '3/4-S'
	Security motion sensor wall mounted at 6" below ceiling, or +10'-0" A.F.F. (U.O.N. whichever is lower.	Type 'B3'	Type 'C5'	Type '3/4-S'
	Security door contact.	Type 'B3'	Type 'C5'	Type '3/4-S'
(5) C	Surveillance camera, exterior type. Height as shown on floor plans	Type 'B1'	Type 'C6' (Weathertight)	Type '1-S'
(5) C	Surveillance camera, interior type mounted 6" below ceiling or +10'-0" whichever is lower (U.O.N.)	Type 'B1'	Type 'C6'	Type '1-S'
(5) C	Surveillance camera, interior type mounted in ceiling.	Type 'B2'	Type 'C6'	Type '1-S'
J	J-Box for Future Low-Voltage Devices @+18" AFF (U.O.N.)	Type 'B1'	Blank Plate Color to Match	Type '1-S'
	Conduit sleeve through wall, above accessible ceiling.	Not required. 3/E4.4	Not required.	(1) 3"C. for open low voltage wiring.
2"C.	Conduit sleeve through wall, above accessible ceiling.	Not required. 3/E4.4	Not required.	(1) Conduit for open low voltage wiring, size as indicated.
(2) 2"C.	Conduit sleeve through wall, above accessible ceiling.	Not required. 3/E4.4	Not required.	Multiple Conduits for open low voltage wiring, size and quantity as indicated.
	Conduit stubbed above accessible ceiling.	Not required.	Not required.	Conduit for open low voltage wiring. Refer to legend for size.
1 1/2"C.	Conduit stubbed above accessible ceiling.	Not required.	Not required.	(1) conduit for open low voltage wiring. size as indicated.
(2) 1"C.	Conduit stubbed above accessible ceiling.	Not required.	Not required.	Conduit for open low voltage wiring. size and quantity as indicated.
PB	Push button for door release height per floor plans.	Type 'B1'	Type 'C1'	Type '3/4-S'
H	Door release horn sounder @+96" A.F.F.	Type 'B1'	By door hard-ware installer	Type '3/4-S' to J-box at door.

GENERAL NOTES:

1. ALL CONDUITS WHICH ARE REQUIRED AS A PART OF SYSTEMS SPECIFIED FOR COMMUNICATIONS, TELEPHONE, INTERCOM, CLOCK FIRE ALARM, SECURITY, SOUND SYSTEMS, DATA NETWORKING, OR AUDIO-VISUAL SYSTEMS SHALL BE FURNISHED AND INSTALLED BY THE ELECTRICAL CONTRACTOR.
2. THE ELECTRICAL CONTRACTOR SHALL COORDINATE ALL CONDUIT REQUIREMENTS WITH EACH SYSTEM SUPPLIER PRIOR TO BID TO DETERMINE SPECIAL CONDUIT SYSTEM REQUIREMENTS.
3. THE ELECTRICAL CONTRACTOR SHALL PROVIDE CONDUIT SLEEVES FOR ALL OPEN CABLE INSTALLATIONS THROUGH RATED WALLS, BLOCK WALLS AND WHERE SHOWN ON THE DRAWINGS. PROVIDE CONDUIT FROM EACH BUILDING MAIN TERMINATION CABINET OR BACKBOARD TO THE NEAREST ACCESSIBLE CEILING FOR ACCESS INTO ALL ELECTRICAL OR COMMUNICATIONS ROOMS.
4. ALL CONDUIT, BOXES, AND RINGS SHALL BE FURNISHED AND INSTALLED BY ELECTRICAL CONTRACTOR.
5. ALL BLANK PLATES SHALL BE FURNISHED AND INSTALLED BY ELECTRICAL CONTRACTOR. (UNLESS OTHERWISE NOTED)
6. ALL CONDUITS SHALL BE FURNISHED WITH PULL STRINGS BY ELECTRICAL CONTRACTOR. COMMUNICATION CONTRACTOR TO PROVIDE POLYARIMIO PULL TAPE WITH NEW CABLING INTO ALL CONDUITS BETWEEN BUILDINGS. SEE SPECIFICATIONS FOR REQUIREMENTS.
7. CONTRACTOR TO REVIEW ARCHITECTURAL CEILING PLANS TO DETERMINE LOCATIONS OF ACCESSIBLE CEILINGS PRIOR TO BID.
8. (271000) NUMBERS INDICATE MATCHING SPECIFICATION SECTION RESPONSIBLE FOR THIS WORK.
9. IN ADDITION TO THE ABOVE REQUIREMENTS, THE FOLLOWING REQUIREMENTS SHALL APPLY TO ALL DATA,VOICE, PAGING, AUDIO-VISUAL, SECURITY AND CLOCK CONDUITS:
10. FLEXIBLE METAL CONDUIT MAY BE USED ONLY WHERE REQUIRED AT BUILDING SEISMIC AND/OR EXPANSION JOINTS.
11. ALL UNDERGROUND CONDUITS SHALL BE PROVIDED WITH MINIMUM 24" RADIUS ELBOWS.
12. NO LENGTH OF CONDUIT SHALL BE INSTALLED TO EXCEED 150 FEET BETWEEN PULL BOXES, OR POINTS OF CONNECTION, UNLESS WHERE SPECIFICALLY DETAILED ON THE DRAWINGS.
13. NO LENGTH OF CONDUIT SHALL BE INSTALLED TO EXCEED TWO 90 DEGREE BENDS BETWEEN PULL BOXES, OR POINTS OF CONNECTION, UNLESS WHERE SPECIFICALLY DETAILED ON THE DRAWINGS.

KEY NOTES:

(1) JUNCTION BOXES FOR DATA AND AUDIO-VISUAL CONNECTIONS MUST BE SEPARATE. AUDIO-VISUAL JUNCTION BOX OR BOXES SHALL BE FURNISHED AS SHOWN IN THE DRAWING DETAILS.

(2) DATA CABLING AND FACEPLATE FOR SYMBOL FURNISHED AND INSTALLED BY 271000 CONTRACTOR.

(3) IP ADDRESSABLE SPEAKER BACKBOX AND DEVICE TO BE FURNISHED AND INSTALLED BY 271000 CONTRACTOR.

(4) IP ADDRESSABLE SPEAKER OR HORN BACKBOX AND DEVICE TO BE FURNISHED BY 271000 CONTRACTOR. BACKBOX TO BE INSTALLED BY THE DIVISION 26 CONTRACTOR.

(5) IP DIGITAL CAMERA LOCATIONS SHALL BE FURNISHED WITH (2) DATA CABLES TERMINATED ON SURFACE MOUNT JACK INSTALLED IN JUNCTION BOX. DATA CONNECTIONS FURNISHED AND INSTALLED BY 271000 CONTRACTOR. SEE SPECIFICATIONS FOR ADDITIONAL REQUIREMENTS. FUTURE CAMERAS FURNISHED AND INSTALLED BY THE DISTRICT.

(6) THE DOOR RELEASE HORN BEING USED FOR AUDIBLE WARNING WHEN DOOE IS OPENED WITHOUT PERMISSION SHALL BE FURNISHED AND INSTALLED BY THE DOOR HARDWARE INSTALLER. 27 10 00 CONTRACTOR SHALL PROVIDE CABLE ONLY FROM HORN LOCATION TO DOOR HARDWARE J-BOX.

(7) DOOR RELEASE PUSH BUTTON SHALL BE PLACED IN OPEN LEG SPACE OF CONTROL DESK IN LIBRARY. MOUNT ON UNDERSIDE OF TOP SURFACE WITHIN REACH. MOUNT J-BOX DIRECTRLY TO BUILT-IN DESK.

IDENTIFICATION STAMP
DIV. OF THE STATE ARCHITECT
APP. 04-118693 INC:
REVIEWED FOR
SS ☑ FLS ☑ ACS ☑
DATE: 03.13.2020

Date
Revison
Consultant
Engineer

studiowc
ARCHITECTURE + ENGINEERING
515 Encinitas Blvd. Ste. 201, Encinitas, California 92024
Telephone: (760)753-6800 Fax: (760)452-7541

LICENSED ARCHITECT
ROBERT D. WEBB A.I.A.
C-28036
OCTOBER 31, 2021
STATE OF CALIFORNIA

CHET. HARRITT ELEM. SCHOOL
LRC & CLASSROOM ADDITION
SANTEE SCHOOL DISTRICT

COMMUNICATION LEGEND & NOTES

Drawn: Author
Checked: Checker
Date:
Job: SSD-CFH-05

E4.0

REGISTERED PROFESSIONAL ENGINEER
MONICA GOESE-HANSEN
NO.E 14781
Exp. 6-30-2021
ELECTRICAL
STATE OF CALIFORNIA

JOHNSON
CONSULTING ENGINEERS, INC.
Power | Lighting | Multimedia
Communications | Data Networking
12875 Brookprinter Place, Suite 300
Poway, CA 92064
P 858.679.4030 | F 858.513.0559
www.jce-inc.com

#19033 2/13/2020 2:00:24 PM

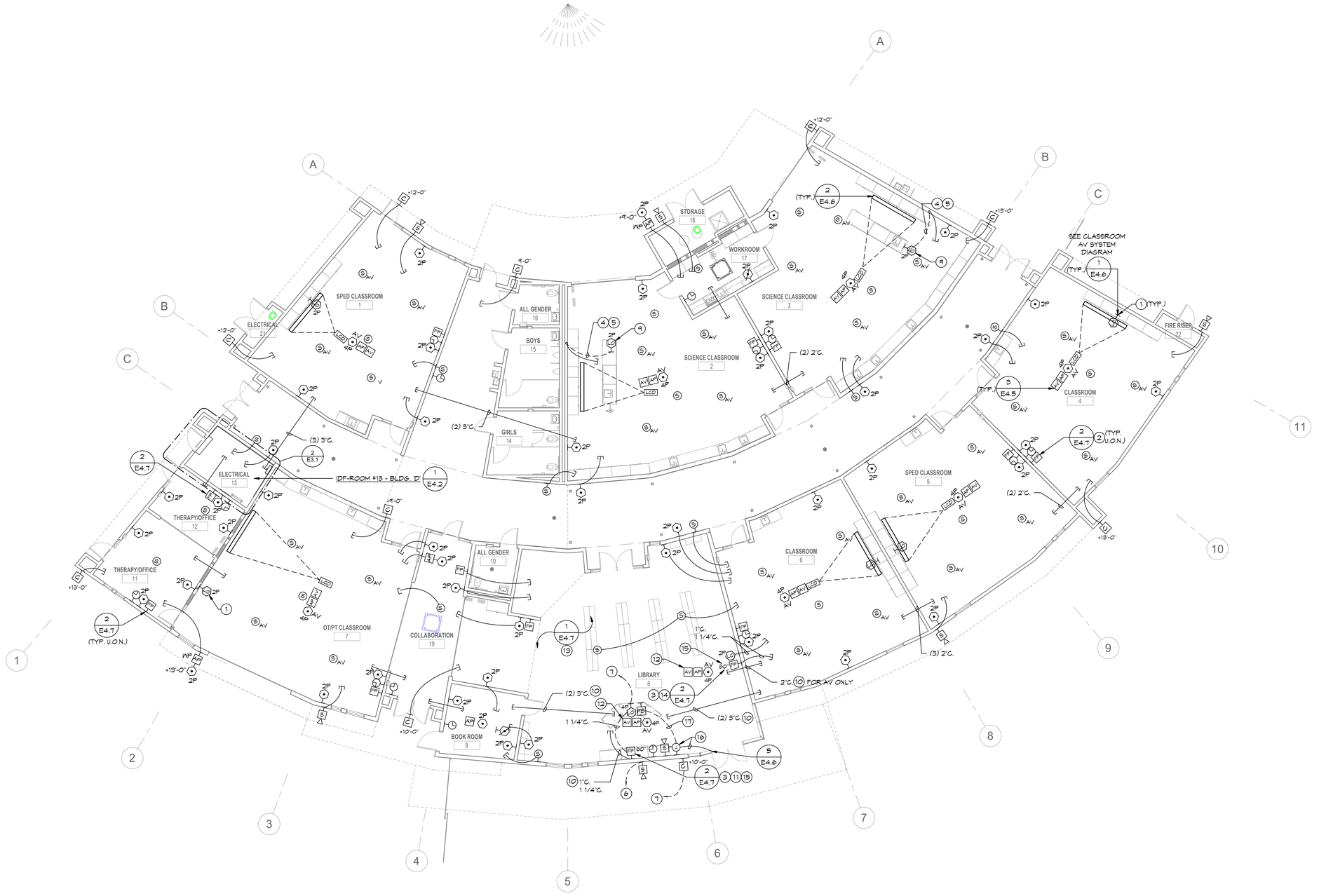

GENERAL NOTES:

1. REFERENCE ARCHITECTURAL INTERIOR ELEVATIONS FOR EXACT LOCATION OF ALL WALL MOUNTED DEVICES.
2. REFERENCE E4 AND E8 SERIES SHEETS FOR TYPICAL CONDUIT AND BACKBOX INSTALLATION DETAILS.
3. REFERENCE E4 SERIES SHEETS FOR TYPICAL COMMUNICATION SYSTEMS RISER DIAGRAM.
4. REFERENCE RISER DIAGRAMS FOR TYPICAL CONDUIT SIZES AND ROUTINGS.
5. LOCATION OF PROJECTOR AND OTHER AUDIO-VISUAL EQUIPMENT IS DIAGRAMMATICAL. EXACT LOCATION OF EQUIPMENT TO BE FIELD VERIFIED PRIOR TO INSTALLATION. LOCATION OF PROJECTOR AND PROJECTOR MOUNT TO BE COORDINATED WITH LOCATION OF SCREEN.
6. REFER TO AUDIO-VISUAL SYSTEM DIAGRAMS FOR ADDITIONAL REQUIREMENTS, FOR JUNCTION BOX LOCATIONS, TYPES AND SIZES.

KEY NOTES:

1. PROVIDE 2-PORT DATA OUTLET AND AUDIO-VISUAL INPUT WALL PLATE ON TEACHING WALL @+26" AFF. COORDINATE LOCATION WITH POWER OUTLET. DATA AND AUDIO-VISUAL WALLPLATES SHALL BE FURNISHED WITH SEPARATE JUNCTION BOXES PER LEGEND. COORDINATE WITH DISTRICT PROJECT MANAGER.
2. FUTURE FLAT PANEL LOCATION. SEE DETAIL DRAWINGS FOR HEIGHT OF DATA OUTLET, AV J-BOX, POWER AND BACKING IN WALL. REFER TO ARCHITECTURAL DRAWINGS FOR ADDITIONAL INFORMATION. NO FLAT PANEL MOUNT IS REQUIRED.
3. LARGE FLAT PANEL AV SYSTEM IN LIBRARY. SYSTEM SHALL BE FURNISHED WITH SOUND BAR FOR AUDIO SUPPORT AND MICRO PC COMPUTER FOR NETWORK ACCESS OPERATION. SEE DRAWING DETAILS AND SPECIFICATIONS FOR ADDITIONAL REQUIREMENTS.
4. PROVIDE 1 1/4" CONDUIT FOR CLASSROOM AUDIO-VISUAL SYSTEM CABLING. STUB CONDUIT INTO ACCESSIBLE CEILING UNLESS OTHERWISE NOTED.
5. PROVIDE 1" CONDUIT FOR DATA CABLING FROM DEMOSTRATION DESK. STUB CONDUIT INTO ACCESSIBLE CEILING UNLESS OTHERWISE NOTED.
6. 3/4"C. TO IDF CLOSET.
7. 1"C. TO IDF CLOSET.
8. 1 1/4"C. TO IDF CLOSET.
9. PROVIDE 2-PORT DATA OUTLET AND AUDIO-VISUAL INPUT WALLPLATE ON DEMOSTRATION TABLE @+26" AFF ON END OF TABLE. COODINATE LOCATION WITH POWER OUTLET. DATA AND AUDIO-VISUAL WALLPLATES SHALL BE FURNISHED WITH SEPARATE JUNCTION BOXES PER LEGEND. COORDINATE WITH DISTRICT PROJECT MANAGER.
10. STUB CONDUIT ABOVE ACCESSIBLE CEILING CLOUD. COORDINATE LOCATION OF CONDUIT STUB WITH OTHER TRADES AND LIGHTING.
11. MOUNT FLAT PANEL @+55" AFF TO CENTER OF FLAT PANEL MOUNT. MOUNT MUST BE CENTERED BETWEEN TALL CABINETS ON EACH SIDE. REFER TO ARCHITECTURAL DRAWINGS FOR ELEVATIONS AND CABINET DETAILS.
12. AUDIO-VISUAL ENCLOSURE FOR FLAT PANEL AV SYSTEM INSTALLED IN ACCESSIBLE CEILING CLOUD. COORDINATE EXACT LOCATION WITH OTHER TRADES AND ARCHITECTURAL DRAWINGS.
13. PROVIDE LIBRARY WITH (2) FULLY FUNCTIONAL FLAT PANEL AUDIO-VISUAL SYSTEMS AS INDICATED IN LIBRARY AUDIO-VISUAL SYSTEM DIAGRAM. REFER TO DETAIL DRAWINGS AND SPECIFICATIONS FOR ADDITIONAL REQUIREMENTS.
14. INSTALL SURFACE FLAT PANEL MOUNT @+74" AFF TO CENTER OF MOUNT.
15. SIZE OF FLAT PANEL, NOT MOUNTING HEIGHT.
16. JUNCTION BOX FOR ACCESS CONTROL DOUBLE DOOR WIRING AND CONTROL CABLING @+36" A.F.F. PROVIDE 1"C. TO DOOR MULLION FOR CABLING. COORDINATE WITH WINDOW AND DOOR CONTRACTORS.
17. PROVIDE 3/4"C. FROM ACCESS CONTROL J-BOX TO LIBRARIAN CONTROL DESK FOR DOOR RELEASE PUSH BUTTON. ROUTE CONDUIT TO OPEN LEG SPACE OF CONTROL DESK. PUSH BUTTON SHALL BE PLACED ON UNDERSIDE OF CONTROL DESK TOP SURFACE. COORDINATE EXACT LOCATION.

LEVEL 1 FLOOR PLAN - COMMUNICATIONS | 1/8" = 1'-0" | 1

IDENTIFICATION STAMP
DIV. OF THE STATE ARCHITECT
APP. 04-118693 INC:
REVIEWED FOR
SS ☑ FLS ☑ ACS ☑
DATE: 03.13.2020

Revison	Date

Consultant

Engineer

studiowc
ARCHITECTURE + ENGINEERING
515 Encinitas Blvd, Ste 201, Encinitas, California 92024
Telephone: (760) 634-8880 Fax: (760) 452-7541

LICENSED ARCHITECT
ROBERT D. WEBB
C-28036
OCTOBER 31, 2021
STATE OF CALIFORNIA

CHET. HARRITT ELEM. SCHOOL
LRC & CLASSROOM ADDITION
SANTEE SCHOOL DISTRICT

COMMUNICATIONS FLOOR PLAN

Drawn: Author
Checked: August 1, 2019
Date:
Job: SSD-CFH-05

E4.1

JOHNSON CONSULTING ENGINEERS, INC.
Power | Lighting | Multimedia
Communications | Data Networking
12875 Brookprinter Place, Suite 300
Poway, CA 92064
P 858.679.4030 | F 858.513.0559
www.jce-inc.com

REGISTERED PROFESSIONAL ENGINEER
MARK DIONNE GOESE-HANSEN
NO. E 14781
Exp. 6-30-2021
ELECTRICAL
STATE OF CALIFORNIA

#19033 2/13/2020 2:00:28 PM

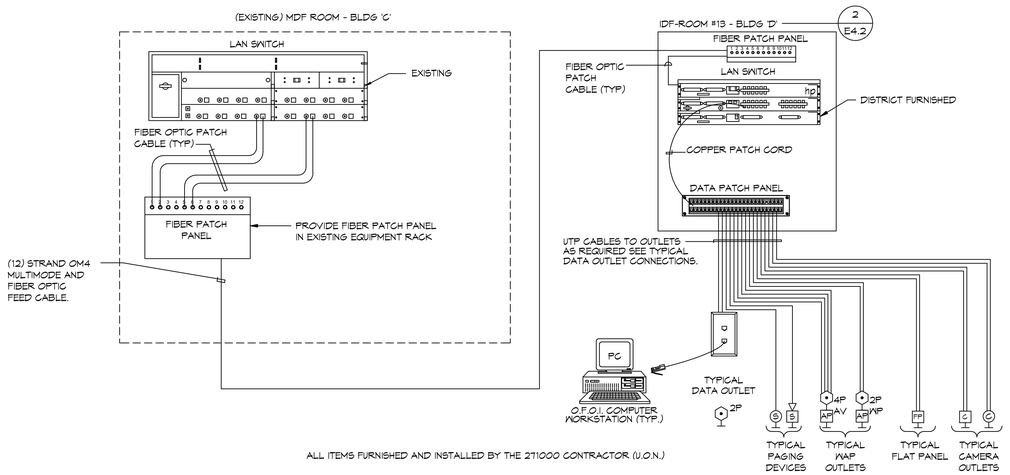

ALL ITEMS FURNISHED AND INSTALLED BY THE 271000 CONTRACTOR (U.O.N.)

GENERAL NOTE:

1. ALL FIBER OPTIC CABLE SHALL HAVE A MINIMUM 20 FOOT SERVICE LOOP NEATLY DRESSED IN LOOP MANAGER DIRECTLY BEHIND EQUIPMENT RACKS.

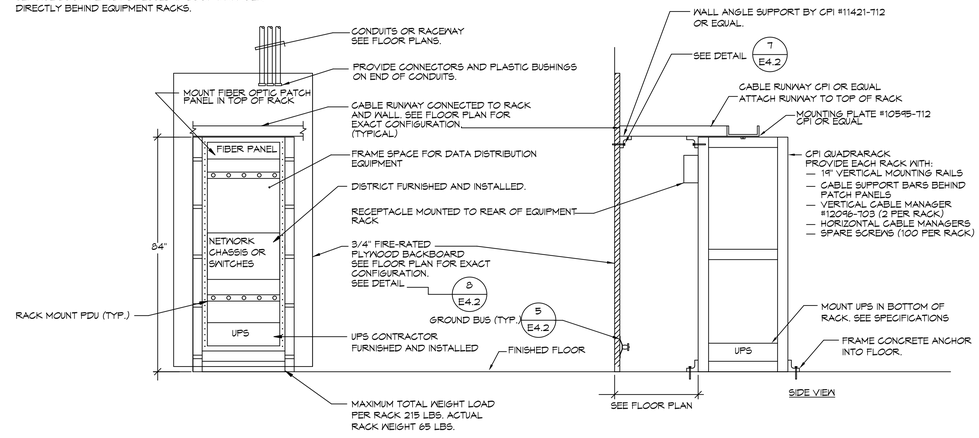

FRONT ELEVATION

REFER TO DETAIL FOR ANCHORAGE REQUIREMENTS

TYPICAL RISER DIAGRAM
NO SCALE — 1 / E4.2

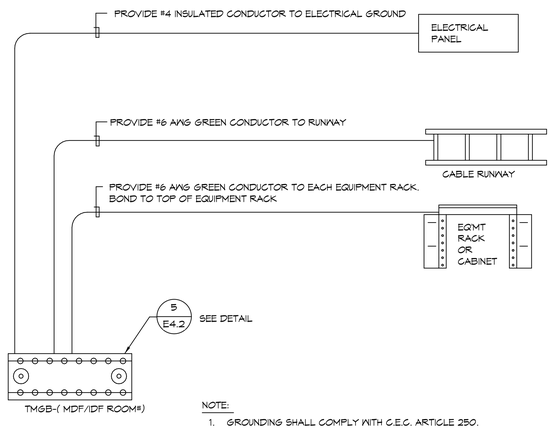

NOTE:

1. GROUNDING SHALL COMPLY WITH C.E.C. ARTICLE 250.

TYPICAL MDF/IDF ROOM GROUNDING DETAIL
NO SCALE — 3 / E4.2

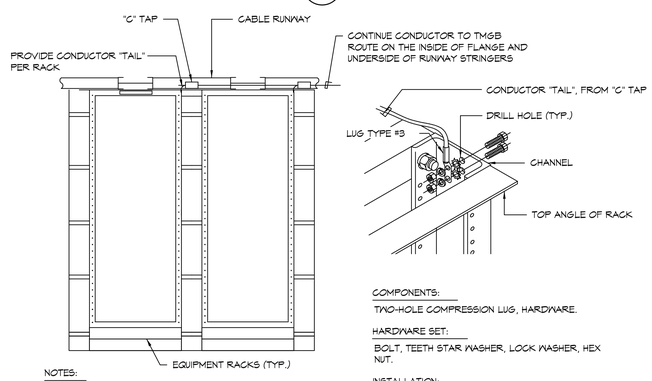

NOTES:

1. BOND EQUIPMENT RACKS INDIVIDUALLY TO BUS BAR.
2. GROUNDING SHALL COMPLY WITH C.E.C. ARTICLE 250.

COMPONENTS:

TWO-HOLE COMPRESSION LUG, HARDWARE.

HARDWARE SET:

BOLT, TEETH STAR WASHER, LOCK WASHER, HEX NUT.

INSTALLATION:

DRILL HOLES THROUGH MOUNTING CHANNEL OF RACK AND VERTICAL MANGER. INSTALL FASTENERS THROUGH CHANNEL AND VERTICAL MANAGER.

TYPICAL EQUIPMENT RACK BONDING IN MDF/IDF ROOM
NO SCALE

TYPICAL EQUIPMENT RACK BONDING IN MDF/IDF ROOM
NO SCALE — 4 / E4.2

DATA DISTRIBUTION FRAME DETAIL - IDF RACK DETAIL 4-PORT RACK
NO SCALE — 2 / E4.2

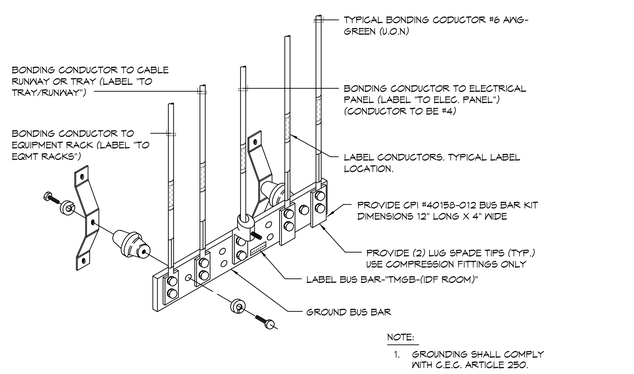

NOTE:

1. GROUNDING SHALL COMPLY WITH C.E.C. ARTICLE 250.

DATA/COMMUNICATIONS GROUNDING DETAIL MDF/IDF ROOM
NO SCALE — 5 / E4.2

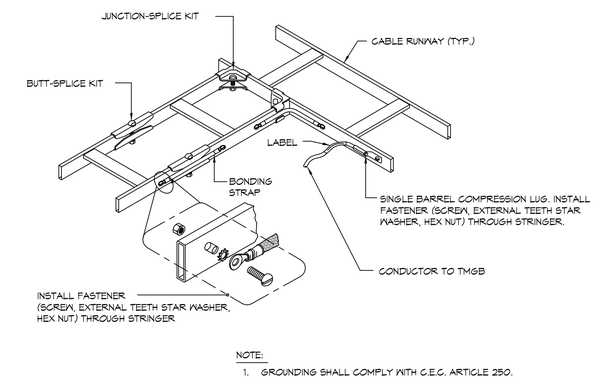

NOTE:

1. GROUNDING SHALL COMPLY WITH C.E.C. ARTICLE 250.

TYPICAL CABLE RUNWAY BONDING IN MDF/IDF ROOM
NO SCALE — 6 / E4.2

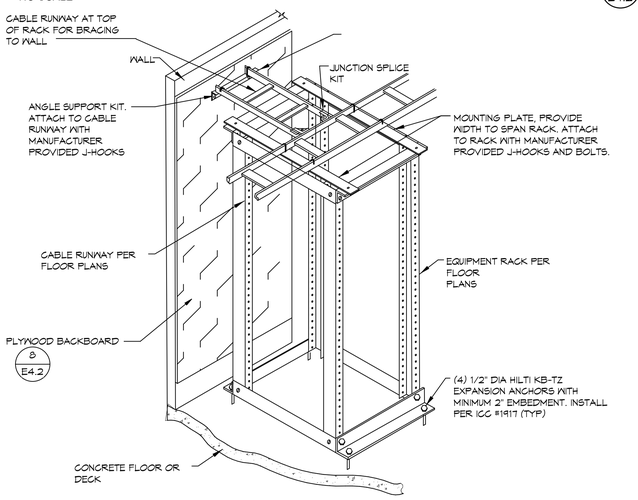

4 POST EQUIPMENT RACK ANCHORAGE
NO SCALE — 7 / E4.2

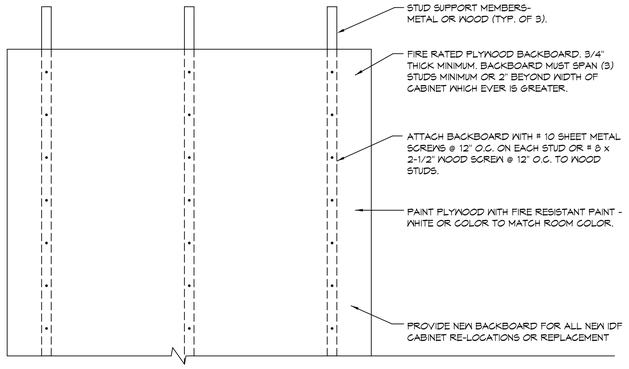

TYPICAL BACKBOARD DETAIL
NO SCALE — 8 / E4.2

IDENTIFICATION STAMP
DIV. OF THE STATE ARCHITECT
APP. 04-118693 INC:
REVIEWED FOR
SS ☑ FLS ☑ ACS ☑
DATE: 03.13.2020

Revison	Date

Consultant

Engineer

studiowc
ARCHITECTURE + ENGINEERING
515 Encinitas Blvd, Ste 201, Encinitas, California 92024
Telephone: (760) 634-8880 Fax: (760) 452-7341

LICENSED ARCHITECT
ROBERT D. WEBB
C-28036
OCTOBER 31, 2021
STATE OF CALIFORNIA

CHET. HARRITT ELEM. SCHOOL
LRC & CLASSROOM ADDITION
SANTEE SCHOOL DISTRICT

COMMUNICATION RISER DIAGRAM AND DETAILS

Drawn: Author
Checked: Checker
Date:
Job: SSD-CFH-05

E4.2

REGISTERED PROFESSIONAL ENGINEER
MICHAEL JOSEPH GOESE-HANSEN
NO. E 14781
Exp. 6-30-2021
ELECTRICAL
STATE OF CALIFORNIA

JOHNSON
CONSULTING ENGINEERS, INC
Power | Lighting | Multimedia
Communications | Data Networking
12875 Brookprinter Place, Suite 300
Poway, CA 92064
P 858.679.4030 | F 858.513.0559
www.jce-inc.com

#19033 2/13/2020 2:00:30 PM

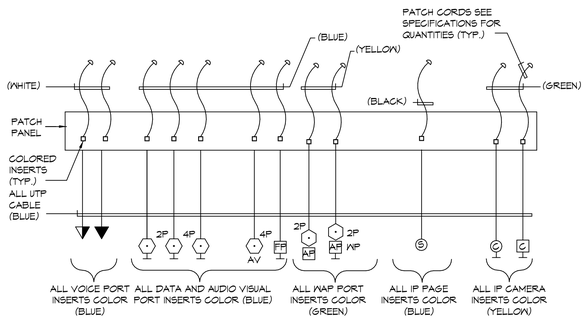

NOTE: CONFIRM ALL COLOR REQUIREMENTS WITH DISTRICT IT DEPARTMENT PRIOR TO ORDERING OR INSTALLATION.

TYPICAL CABLE/INSERT COLOR SCHEME DETAIL

NO SCALE

1 E4.3

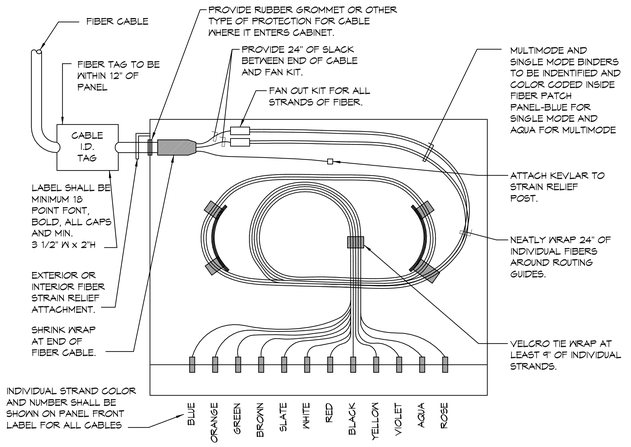

TYPICAL FIBER TERMINATION DETAIL

NO SCALE

2 E4.3

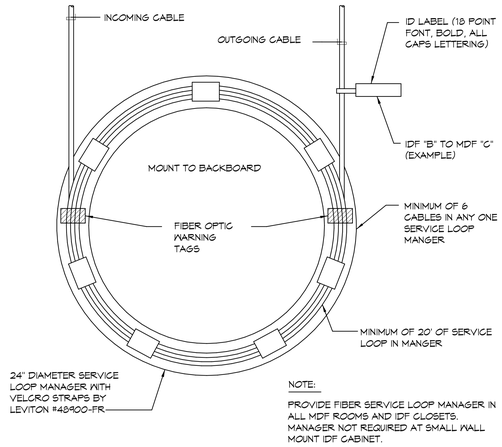

NOTE:

PROVIDE FIBER SERVICE LOOP MANAGER IN ALL MDF ROOMS AND IDF CLOSETS. MANAGER NOT REQUIRED AT SMALL WALL MOUNT IDF CABINET.

TYPICAL FIBER OTIC FEED SERVICE LOOP DETAIL

NO SCALE

3 E4.3

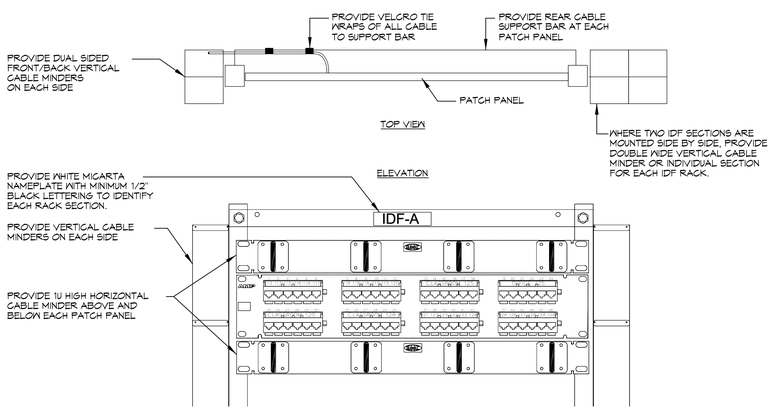

TYPICAL IDF/MDF LABELING AND CABLE SUPPOT DETAIL

NO SCALE

4 E4.3

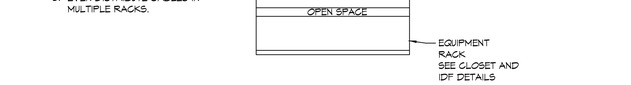

GENERAL NOTE:

1. TERMINATE A MAXIMUM OF 240 CATEGORY 6 DATA CABLES IN ANY EQUIPMENT RACK.
2. CONFIRM QUANTITY OF SWITCHES WITH DISTRICT FOR HORIZONTAL MANAGER REQUIREMENTS.
3. EVEN DISTRIBUTE CABLES IN MULTIPLE RACKS.

MAXIMUM EQUIPMENT RACK POPULATON DETAIL

NO SCALE

5 E4.3

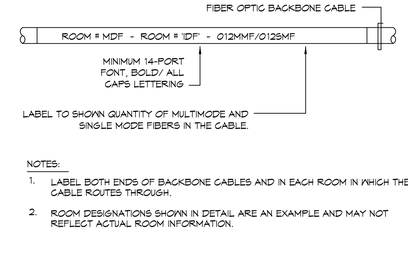

NOTES:

1. LABEL BOTH ENDS OF BACKBONE CABLES AND IN EACH ROOM IN WHICH THE CABLE ROUTES THROUGH.
2. ROOM DESIGNATIONS SHOWN IN DETAIL ARE AN EXAMPLE AND MAY NOT REFLECT ACTUAL ROOM INFORMATION.

TYPICAL BACKBONE LABELING DETAIL

NO SCALE

6 E4.3

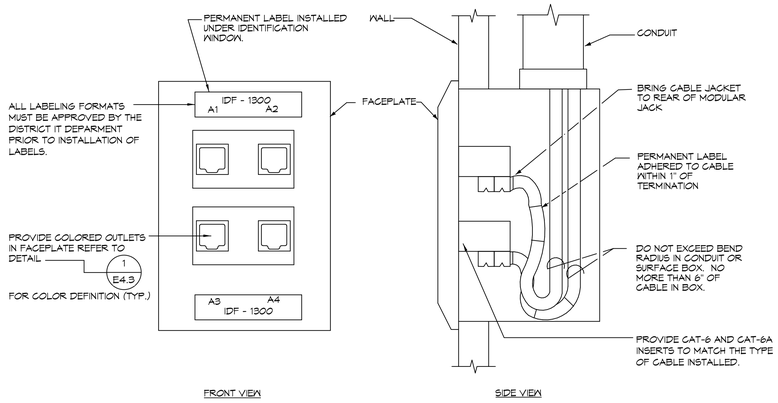

TYPICAL FACEPLATE LABELING DETAIL

NO SCALE

7 E4.3

GENERAL NOTES:

1. ALL IDENTIFICATIONS SHALL BE MACHINE MADE. NO HAND WRITTEN LABELS. SEE SPECIFICATIONS. VERIFY IN WRITING ALL ROOM IDENTIFICATIONS WITH ARCHITECT PRIOR TO MAKING ANY LABELS.
2. ALL LABELING FORMATS ARE SUBJECT TO APPROVAL BY THE DISTRICT IT DEPARTMENT. CONTRACTOR MUST CONFIRM ALL LABELING FORMATS PRIOR TO INSTALLATION OF ANY LABELS AND MUST HAVE WRITTEN APROVAL.

NOTE:

1. EACH IDF SHALL BE NUMBERED TO MATCH THE BUILDING NAME (IDF-A or IDF-100, FOR BUILDINGS WITH MULTIPLE IDFS (IDF-A1, A2 or IDF-100A, 100B)
2. NUMBER TO MATCH MANUFACTURER'S PREPRINTED NUMBERS 1-48 ON PATCH PANEL
3. BOTH ROOM NUMBER AND PATCH PANEL PORT ASSIGNMENT MUST BE SHOWN ON PATCH PANEL.

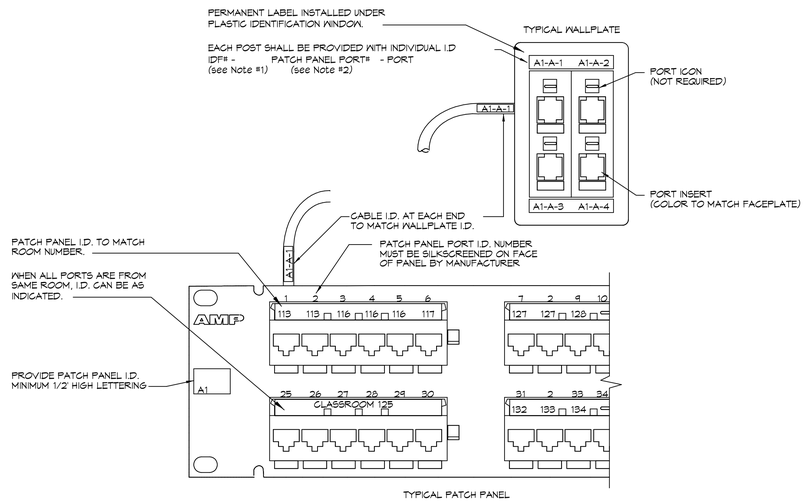

TYPICAL DATA NETWORKING LABELING REQUIREMENT

NO SCALE

8 E4.3

IDENTIFICATION STAMP
DIV. OF THE STATE ARCHITECT
APP. 04-118693 INC:
REVIEWED FOR
SS ☑ FLS ☑ ACS ☑
DATE: 03.13.2020

Revison	Date

Consultant

Engineer

studiowc
ARCHITECTURE + ENGINEERING
515 Encinitas Blvd, Ste 201 Encinitas, California 92024
Telephone: (760)632-8800 Fax: (760)452-7041

LICENSED ARCHITECT
ROBERT D. WEBB
C-28036
OCTOBER 31, 2021
STATE OF CALIFORNIA

CHET. HARRITT ELEM. SCHOOL
LRC & CLASSROOM ADDITION
SANTEE SCHOOL DISTRICT

COMMUNICATION DETAILS

Drawn: Author
Checked: Checker
Date:
Job: SSD-CFH-05

E4.3

JOHNSON
CONSULTING ENGINEERS, INC.
Power | Lighting | Multimedia
Communications | Data Networking
12875 Brookprinter Place, Suite 300
Poway, CA 92064
P 858.679.4030 | F 858.513.0559
www.jce-inc.com

REGISTERED PROFESSIONAL ENGINEER
MICHAEL REESE-HANSON
NO.E 14781
Exp. 6-30-2021
ELECTRICAL
STATE OF CALIFORNIA

#19033 2/13/2020 2:00:32 PM

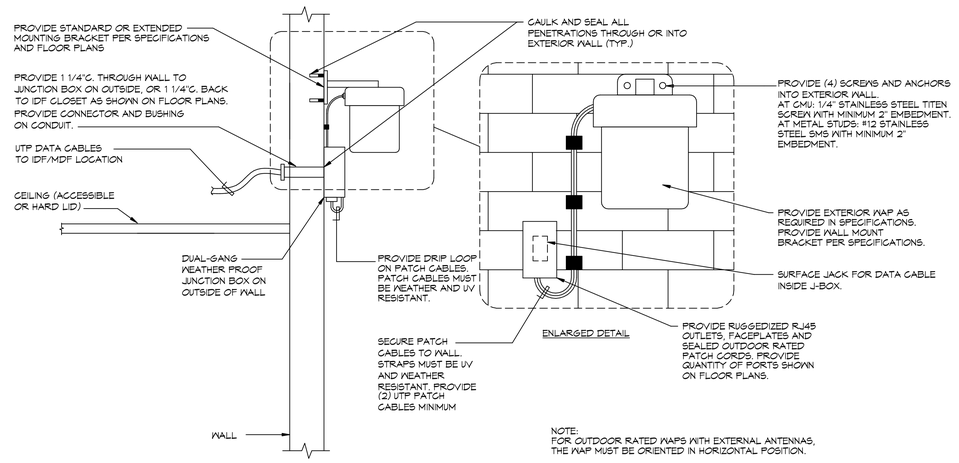

EXTERIOR OUTDOOR RATED WIRELESS ACCESS POINT MOUNTING DETAIL

NO SCALE

1 / E4.4

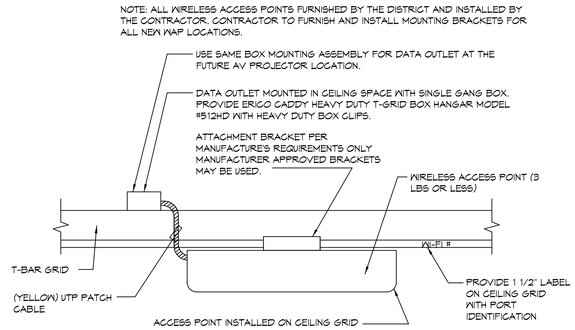

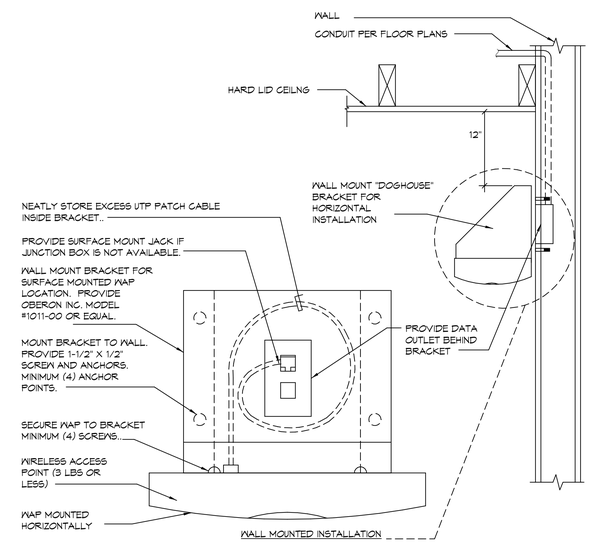

WIRELESS ACCESS POINT ANTENNA MOUNTING DETAILS

NO SCALE

2 / E4.4

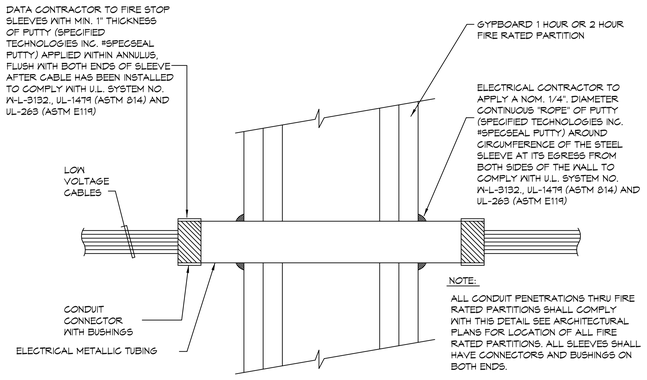

DATA SLEEVE PENETRATION THRU FIRE RATED PARTITIONS

NO SCALE

3 / E4.4

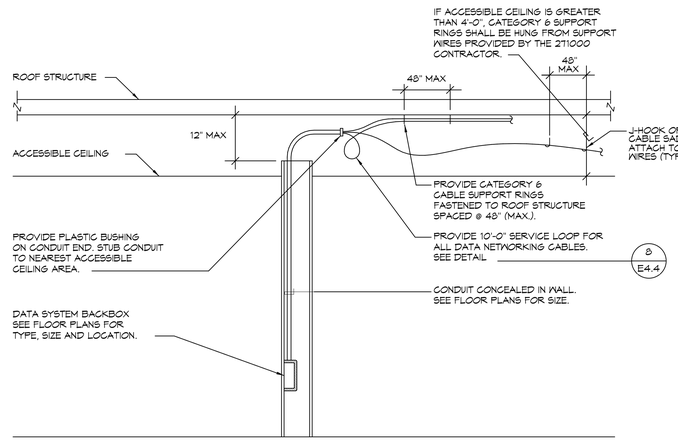

COMMUNICATIONS SYSTEM OPEN WIRE/CONDUUIT STUB TYPICAL

NO SCALE

4 / E4.4

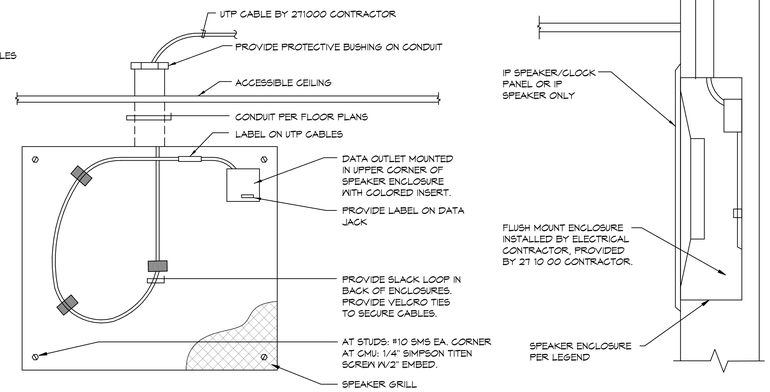

FLUSH MOUNTED IP SPEAKER

NO SCALE

5 / E4.4

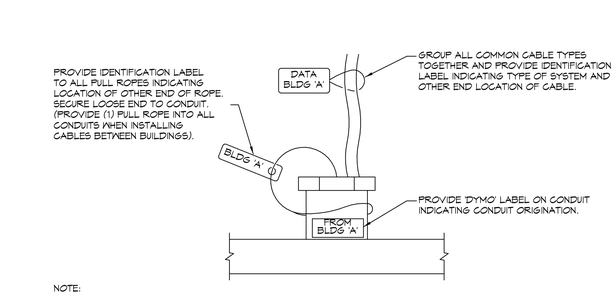

COMMUNICATION CABLE TYPICAL LABELING DETAIL

NO SCALE

6 / E4.4

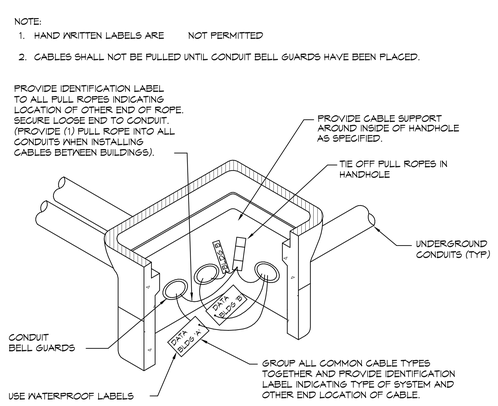

COMMUNICATION HANDHOLE LABELING DETAIL (TYP)

NO SCALE

7 / E4.4

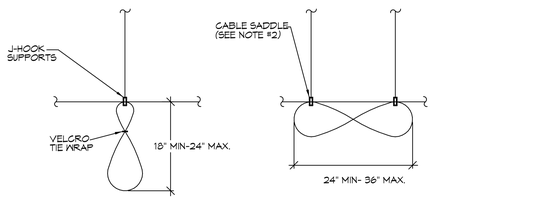

TYPICAL SERVICE LOOP

NO SCALE

8 / E4.4

IDENTIFICATION STAMP
DIV. OF THE STATE ARCHITECT
APP. 04-118693 INC:
REVIEWED FOR
SS ☑ FLS ☑ ACS ☑
DATE: 03.13.2020

Revison	Date

Consultant

Engineer

studiowc
ARCHITECTURE + ENGINEERING
515 Encinitas Blvd, Ste 201, Encinitas, California 92024
Telephone: (760) 634-8880 Fax: (760) 452-7341

LICENSED ARCHITECT
ROBERT D. WEBB
C-28036
OCTOBER 31, 2021
STATE OF CALIFORNIA

CHET. HARRITT ELEM. SCHOOL
LRC & CLASSROOM ADDITION
SANTEE SCHOOL DISTRICT

COMMUNICATION DETAILS

Drawn: Author
Checked: Checker
Date:
Job: SSD-CFH-05

E4.4

JOHNSON
CONSULTING ENGINEERS, INC.
Power | Lighting | Multimedia
Communications | Data Networking
12875 Brookprinter Place, Suite 300
Poway, CA 92064
P 858.679.4030 | F 858.513.0559
www.jce-inc.com

REGISTERED PROFESSIONAL ENGINEER
MICHAEL GOSSE-HANSEN
NO.E 14781
Exp. 6-30-2021
ELECTRICAL
STATE OF CALIFORNIA

#19033
2/13/2020 2:00:34 PM

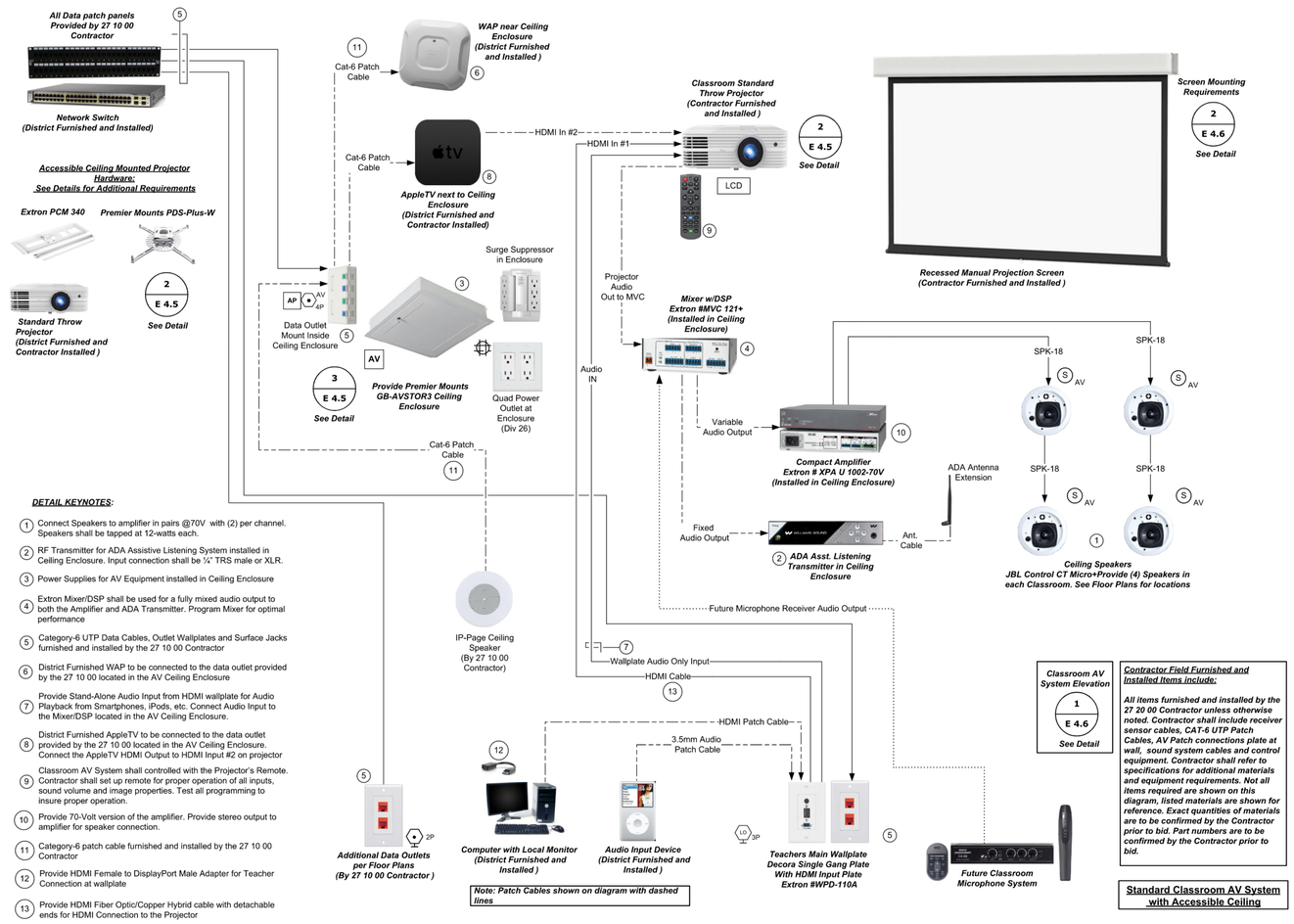

DETAIL KEYNOTES:

1. Connect Speakers to amplifier in pairs @70V with (2) per channel. Speakers shall be tapped at 12-watts each.
2. RF Transmitter for ADA Assistive Listening System installed in Ceiling Enclosure. Input connection shall be ¼" TRS male or XLR.
3. Power Supplies for AV Equipment installed in Ceiling Enclosure
4. Extron Mixer/DSP shall be used for a fully mixed audio output to both the Amplifier and ADA Transmitter. Program Mixer for optimal performance
5. Category-6 UTP Data Cables, Outlet Wallplates and Surface Jacks furnished and installed by the 27 10 00 Contractor
6. District Furnished WAP to be connected to the data outlet provided by the 27 10 00 located in the AV Ceiling Enclosure
7. Provide Stand-Alone Audio Input from HDMI wallplate for Audio Playback from Smartphones, iPods, etc. Connect Audio Input to the Mixer/DSP located in the AV Ceiling Enclosure.
8. District Furnished AppleTV to be connected to the data outlet provided by the 27 10 00 located in the AV Ceiling Enclosure. Connect the AppleTV HDMI Output to HDMI Input #2 on projector
9. Classroom AV System shall controlled with the Projector's Remote. Contractor shall set up remote for proper operation of all inputs, sound volume and image properties. Test all programming to insure proper operation.
10. Provide 70-Volt version of the amplifier. Provide stereo output to amplifier for speaker connection.
11. Category-6 patch cable furnished and installed by the 27 10 00 Contractor
12. Provide HDMI Female to DisplayPort Male Adapter for Teacher Connection at wallplate
13. Provide HDMI Fiber Optic/Copper Hybrid cable with detachable ends for HDMI Connection to the Projector

STANDARD CLASSROOM AUDIO-VISUAL SYSTEM DIAGRAM

NO SCALE

1 / E4.5

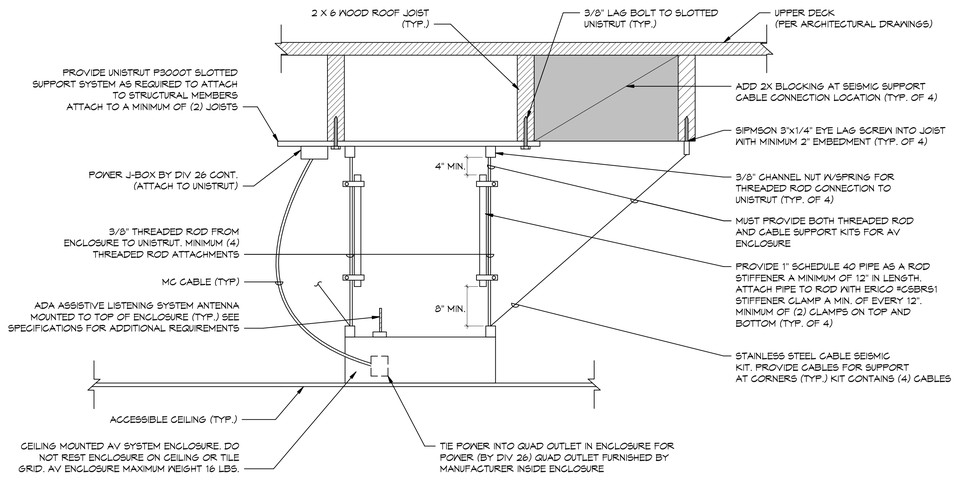

NOTES:

1. PROVIDE LENGTH OF THREADED ROD AND SUPPORT CABLES AS REQUIRED TO MAKE ATTACHMENT.
2. COORDINATE WITH ARCHITECTURAL FOR CEILING TILE AND T-GRID FOR PLACEMENT OF AV ENCLOSURE.
3. PROVIDE CEILING MOUNTED ENCLOSURE BY PREMIER MOUNTS MODEL #GB-AVSTOR3 WITH BOTH THREADED ROD AND SUPPORT CABLES KITS. ENCLOSURE SHALL BE FURNISHED WITH INTERNAL QUAD POWER RECEPTACLE.

CLASSROOM AUDIO-VISUAL CEILING ENCLOSURE

NO SCALE

3 / E4.5

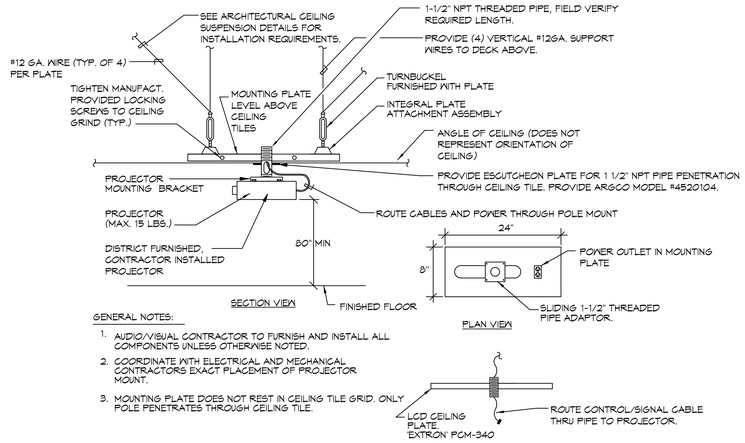

GENERAL NOTES:

1. AUDIO/VISUAL CONTRACTOR TO FURNISH AND INSTALL ALL COMPONENTS UNLESS OTHERWISE NOTED.
2. COORDINATE WITH ELECTRICAL AND MECHANICAL CONTRACTORS EXACT PLACEMENT OF PROJECTOR MOUNT.
3. MOUNTING PLATE DOES NOT REST IN CEILING TILE GRID. ONLY POLE PENETRATES THROUGH CEILING TILE.

CEILING PROJECTOR MOUNTING DETAIL FOR ACCESSIBLE CEILING

NO SCALE

2 / E4.5

IDENTIFICATION STAMP
DIV. OF THE STATE ARCHITECT
APP. 04-118693 INC:
REVIEWED FOR
SS ☑ FLS ☑ ACS ☑
DATE: 03.13.2020

Revision	Date

Consultant

Engineer

studiowc
ARCHITECTURE + ENGINEERING
515 Encinitas Blvd, Ste 201, Encinitas, California 92024
Telephone: (760) 634-8880 Fax: (760) 452-7541

LICENSED ARCHITECT
ROBERT D. WEBB
C-28036
OCTOBER 31, 2021
STATE OF CALIFORNIA

CHET. HARRITT ELEM. SCHOOL
LRC & CLASSROOM ADDITION
SANTEE SCHOOL DISTRICT

CLASSROOM AUDIO-VISUAL DETAILS

Drawn: Author
Checked: Checker
Date:
Job: SSD-CFH-05

E4.5

REGISTERED PROFESSIONAL ENGINEER
MONTGOMERY ROSE-HANSEN
NO.E 14781
Exp. 6-30-2021
ELECTRICAL
STATE OF CALIFORNIA

JOHNSON
CONSULTING ENGINEERS, INC.
Power | Lighting | Multimedia
Communications | Data Networking
12875 Brookprinter Place, Suite 300
Poway, CA 92064
P 858.679.4030 | F 858.513.0559
www.jce-inc.com

#19033 2/13/2020 2:00:36 PM

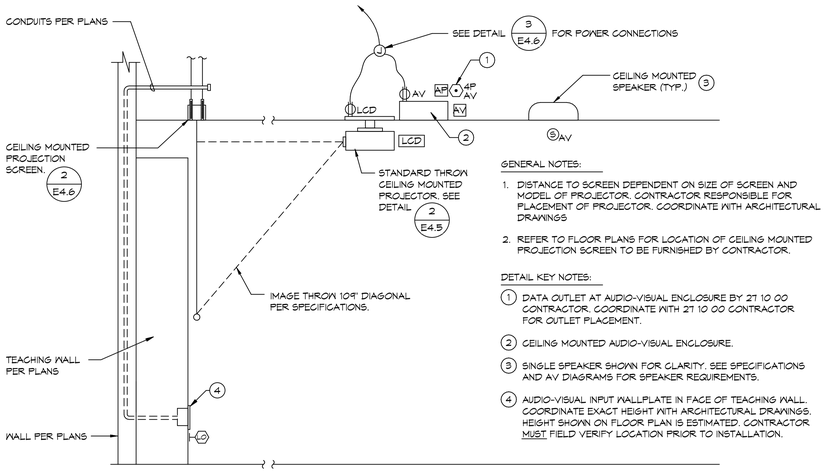

GENERAL NOTES:

1. DISTANCE TO SCREEN DEPENDENT ON SIZE OF SCREEN AND MODEL OF PROJECTOR. CONTRACTOR RESPONSIBLE FOR PLACEMENT OF PROJECTOR. COORDINATE WITH ARCHITECTURAL DRAWINGS
2. REFER TO FLOOR PLANS FOR LOCATION OF CEILING MOUNTED PROJECTION SCREEN TO BE FURNISHED BY CONTRACTOR.

DETAIL KEY NOTES:

(1) DATA OUTLET AT AUDIO-VISUAL ENCLOSURE BY 27 10 00 CONTRACTOR. COORDINATE WITH 27 10 00 CONTRACTOR FOR OUTLET PLACEMENT.

(2) CEILING MOUNTED AUDIO-VISUAL ENCLOSURE.

(3) SINGLE SPEAKER SHOWN FOR CLARITY. SEE SPECIFICATIONS AND AV DIAGRAMS FOR SPEAKER REQUIREMENTS.

(4) AUDIO-VISUAL INPUT WALLPLATE IN FACE OF TEACHING WALL. COORDINATE EXACT HEIGHT WITH ARCHITECTURAL DRAWINGS. HEIGHT SHOWN ON FLOOR PLAN IS ESTIMATED. CONTRACTOR MUST FIELD VERIFY LOCATION PRIOR TO INSTALLATION.

TYPICAL CEILING MOUNTED PROJECTOR INSTALLATION - ACCESSIBLE CEILINGS

NO SCALE

1 E4.6

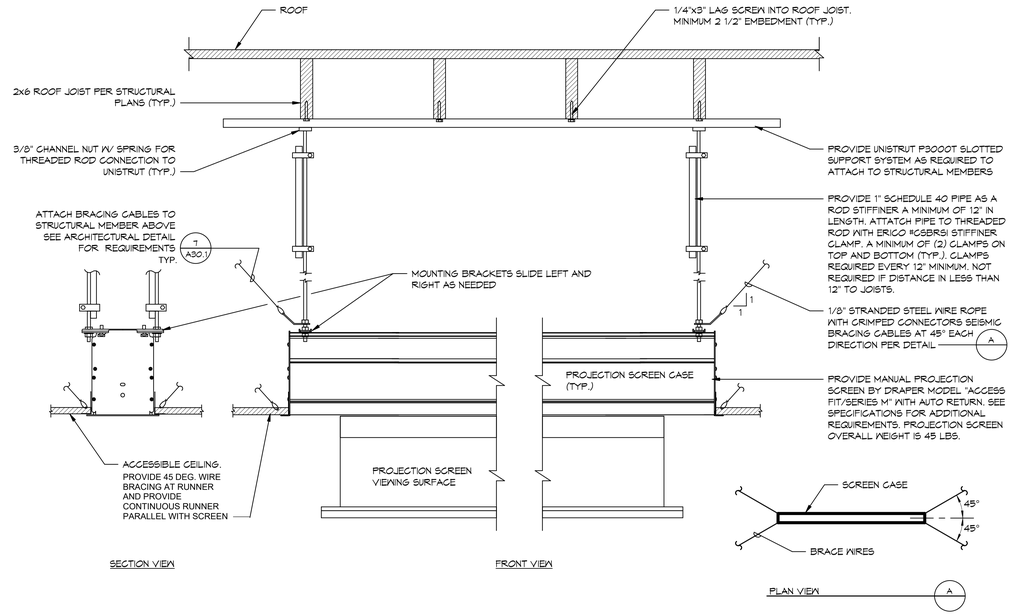

RECESSED TENSIONED PROJECTION SCREEN MOUNTING DETAILS

NO SCALE

2 E4.6

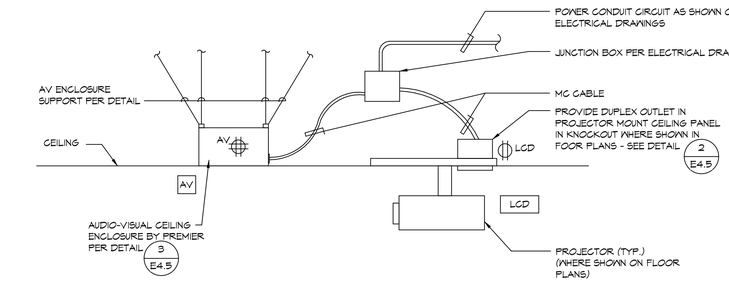

NOTES:

1. REFER TO ELECTRICAL AND COMMUNICATIONS FLOOR PLANS FOR LOCATIONS OF POWER AND AV DEVICES.
2. PROVIDE UNISTRUT SUPPORT ABOVE AV CEILING ENCLOSURE TO STRUCTURAL SUPPORT MEMBERS. TIE 3/8" ROD INTO UNISTRUT FOR ENCLOSURE SUPPORT.

CEILING ENCLOSURE / PROJECTOR - POWER CONNECTION

NO SCALE

3 E4.6

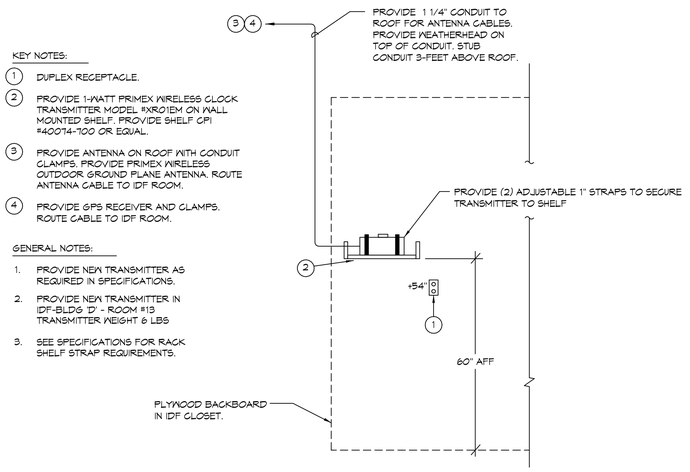

KEY NOTES:

(1) DUPLEX RECEPTACLE.

(2) PROVIDE 1-WATT PRIMEX WIRELESS CLOCK TRANSMITTER MODEL #XR01EM ON WALL MOUNTED SHELF. PROVIDE SHELF CPI #40074-700 OR EQUAL.

(3) PROVIDE ANTENNA ON ROOF WITH CONDUIT CLAMPS. PROVIDE PRIMEX WIRELESS OUTDOOR GROUND PLANE ANTENNA. ROUTE ANTENNA CABLE TO IDF ROOM.

(4) PROVIDE GPS RECEIVER AND CLAMPS. ROUTE CABLE TO IDF ROOM.

GENERAL NOTES:

1. PROVIDE NEW TRANSMITTER AS REQUIRED IN SPECIFICATIONS.
2. PROVIDE NEW TRANSMITTER IN IDF-BLDG 'D' - ROOM #13 TRANSMITTER WEIGHT 6 LBS
3. SEE SPECIFICATIONS FOR RACK SHELF STRAP REQUIREMENTS.

WIRELESS CLOCK TRANSMITTER DETAIL

NO SCALE

4 E4.6

DETAIL KEYNOTES:

(1) The 27 10 00 Contractor shall furnish and install the cable for the Door Release Alarm Horn. Run cable from the Horn location shown on the floor plans to the Door J-Box location shown on the Floor Plans. Provide a 2-Conductor, 18-AWG Shielded cable with a CM or CMR-rated jacket. Leave slack at both ends for connection by Door Contractor

(2) The 27 10 00 Contractor shall furnish and install the Door Release Push Button and cable to Door J-Box. Run cable from the Push Button location shown on the floor plans to the Door J-Box location shown on the Floor Plans. Provide a 2-Conductor, 18-AWG Shielded cable with a CM or CMR-rated jacket. See specifications for Push Button requirements

**Note: PS902 is not to be used for double door CHEXIT applications.

Figure 1. Typical Door - Actual Door per Arch. Floor Plans

ALL CABLING AND COMPONENTS SHALL BE PROVIDED BY THE DOOR CONTRACTOR EXCEPT FOR THE ITEMS SPECIFICALLY CALLED OUT BY THE 27 10 00 CONTRACTOR

DOOR RELEASE DETAIL

NO SCALE

5 E4.6

IDENTIFICATION STAMP
DIV. OF THE STATE ARCHITECT
APP. 04-118693 INC:
REVIEWED FOR
SS ☑ FLS ☑ ACS ☑
DATE: 03.13.2020

Revison | Date

Consultant

Engineer

studiowc
ARCHITECTURE + ENGINEERING
515 Encinitas Blvd, Ste 201, Encinitas, California 92024
Telephone: (760) 634-8880 Fax: (760) 452-7541

LICENSED ARCHITECT
ROBERT D. WEBB
C-28036
OCTOBER 31, 2021
STATE OF CALIFORNIA

CHET. HARRITT ELEM. SCHOOL
LRC & CLASSROOM ADDITION
SANTEE SCHOOL DISTRICT

CLASSROOM AUDIO-VISUAL DETAILS

Drawn: Author
Checked: Checker
Date:
Job: SSD-CFH-05

E4.6

REGISTERED PROFESSIONAL ENGINEER
MICHAEL JOSEPH REESE-HANSEN
NO. E 14781
Exp. 6-30-2021
ELECTRICAL
STATE OF CALIFORNIA

JOHNSON
CONSULTING ENGINEERS, INC.
Power | Lighting | Multimedia
Communications | Data Networking
12875 Brookprinter Place, Suite 300
Poway, CA 92064
P 858.679.4030 | F 858.513.0559
www.jce-inc.com

#19033 2/13/2020 2:00:37 PM

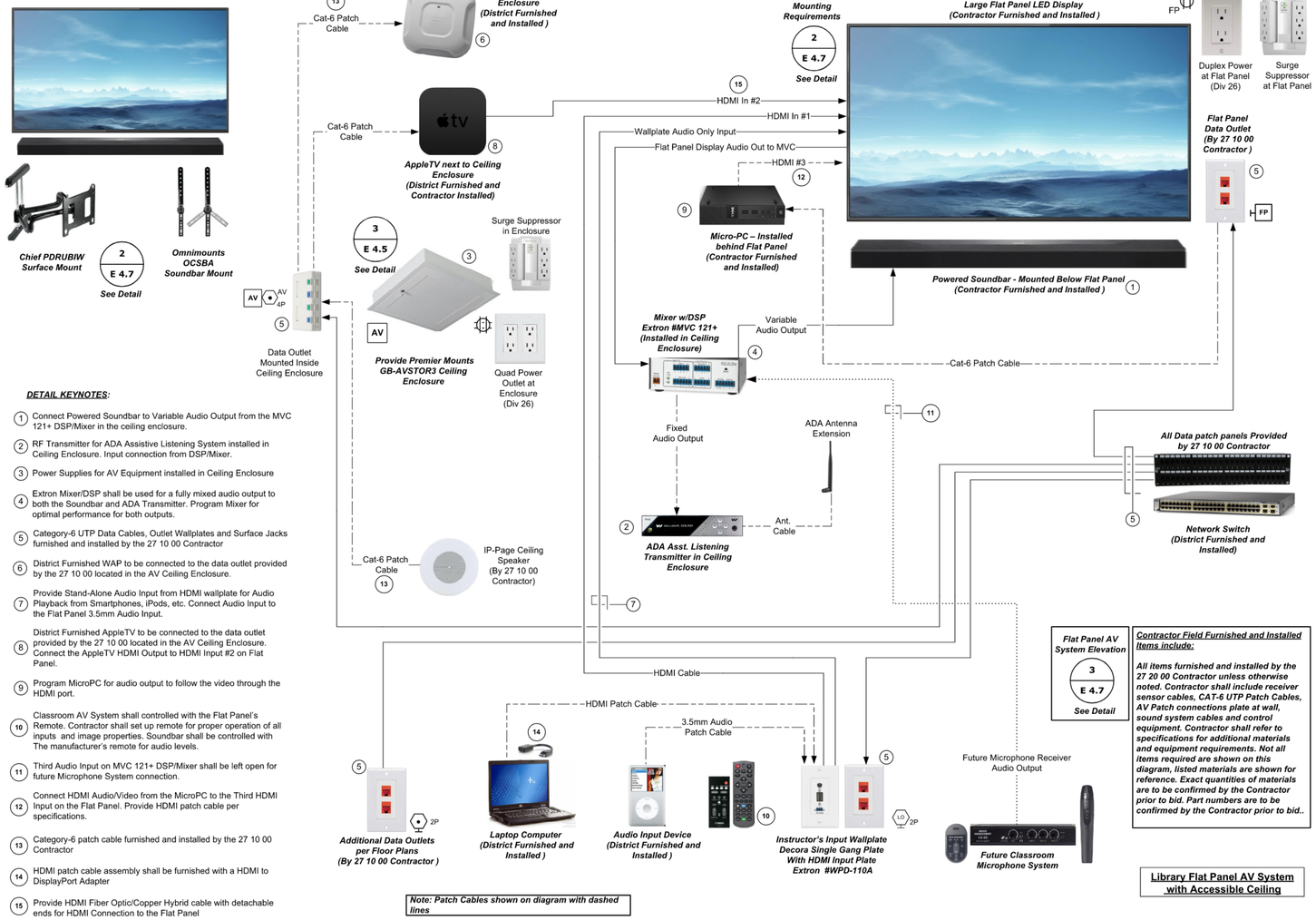

DETAIL KEYNOTES:

1. Connect Powered Soundbar to Variable Audio Output from the MVC 121+ DSP/Mixer in the ceiling enclosure.
2. RF Transmitter for ADA Assistive Listening System installed in Ceiling Enclosure. Input connection from DSP/Mixer.
3. Power Supplies for AV Equipment installed in Ceiling Enclosure
4. Extron Mixer/DSP shall be used for a fully mixed audio output to both the Soundbar and ADA Transmitter. Program Mixer for optimal performance for both outputs.
5. Category-6 UTP Data Cables, Outlet Wallplates and Surface Jacks furnished and installed by the 27 10 00 Contractor
6. District Furnished WAP to be connected to the data outlet provided by the 27 10 00 located in the AV Ceiling Enclosure.
7. Provide Stand-Alone Audio Input from HDMI wallplate for Audio Playback from Smartphones, iPods, etc. Connect Audio Input to the Flat Panel 3.5mm Audio Input.
8. District Furnished AppleTV to be connected to the data outlet provided by the 27 10 00 located in the AV Ceiling Enclosure. Connect the AppleTV HDMI Output to HDMI Input #2 on Flat Panel.
9. Program MicroPC for audio output to follow the video through the HDMI port.
10. Classroom AV System shall controlled with the Flat Panel's Remote. Contractor shall set up remote for proper operation of all inputs and image properties. Soundbar shall be controlled with The manufacturer's remote for audio levels.
11. Third Audio Input on MVC 121+ DSP/Mixer shall be left open for future Microphone System connection.
12. Connect HDMI Audio/Video from the MicroPC to the Third HDMI Input on the Flat Panel. Provide HDMI patch cable per specifications.
13. Category-6 patch cable furnished and installed by the 27 10 00 Contractor
14. HDMI patch cable assembly shall be furnished with a HDMI to DisplayPort Adapter
15. Provide HDMI Fiber Optic/Copper Hybrid cable with detachable ends for HDMI Connection to the Flat Panel

LIBRARY AUDIO-VISUAL SYSTEM DIAGRAM

NO SCALE

1 / E4.7

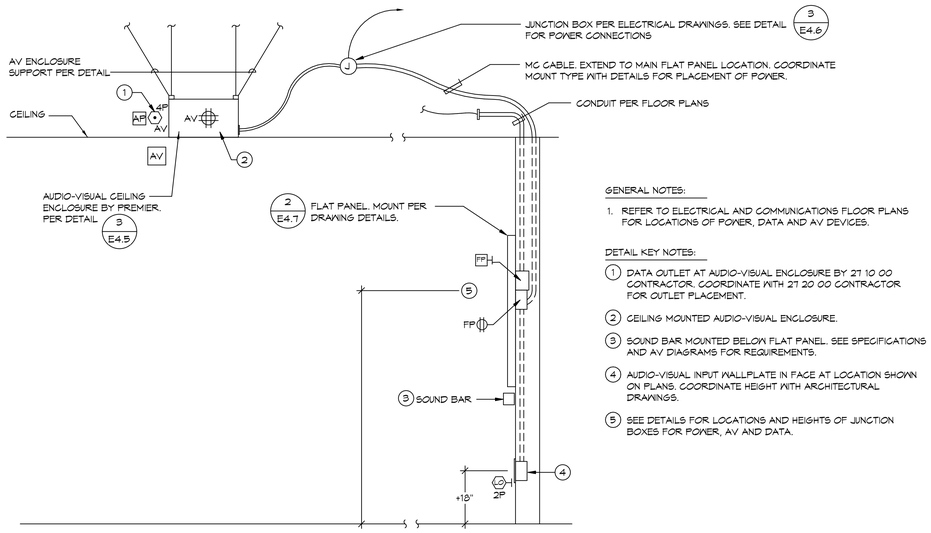

GENERAL NOTES:

1. REFER TO ELECTRICAL AND COMMUNICATIONS FLOOR PLANS FOR LOCATIONS OF POWER, DATA AND AV DEVICES.

DETAIL KEY NOTES:

1. DATA OUTLET AT AUDIO-VISUAL ENCLOSURE BY 27 10 00 CONTRACTOR. COORDINATE WITH 27 20 00 CONTRACTOR FOR OUTLET PLACEMENT.
2. CEILING MOUNTED AUDIO-VISUAL ENCLOSURE.
3. SOUND BAR MOUNTED BELOW FLAT PANEL. SEE SPECIFICATIONS AND AV DIAGRAMS FOR REQUIREMENTS.
4. AUDIO-VISUAL INPUT WALLPLATE IN FACE AT LOCATION SHOWN ON PLANS. COORDINATE HEIGHT WITH ARCHITECTURAL DRAWINGS.
5. SEE DETAILS FOR LOCATIONS AND HEIGHTS OF JUNCTION BOXES FOR POWER, AV AND DATA.

AUDIO-VISUAL SYSTEM CEILING ENCLOSURE AND FLAT PANEL MONITOR - POWER CONNECTION

NO SCALE

3 / E4.7

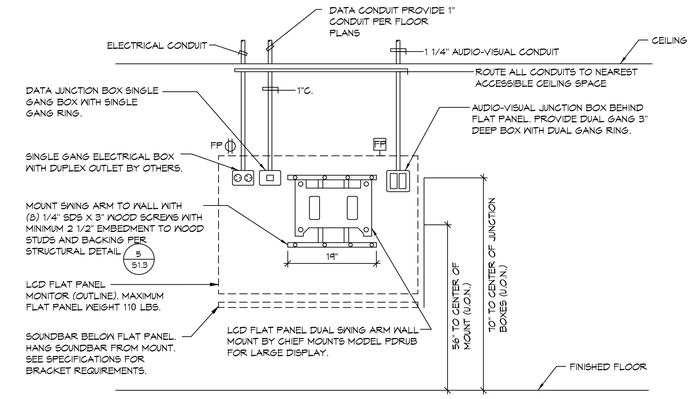

NOTE: FINAL FLAT PANEL MODEL CHOSEN MAY EFFECT MOUNTING HEIGHT. REFER TO FLOOR PLANS PRIOR INSTALLING MOUNT, AS FLOOR PLANS MAY SHOW A DIFFERENT MOUNTING HEIGHT.

LED FLAT PANEL INSTALLATION - SURFACE MOUNT

NO SCALE

2 / E4.7

IDENTIFICATION STAMP
DIV. OF THE STATE ARCHITECT
APP. 04-118693 INC:
REVIEWED FOR
SS ☑ FLS ☑ ACS ☑
DATE: 03.13.2020

Date	Revison	Consultant	Engineer

studiowc
ARCHITECTURE + ENGINEERING
515 Encinitas Blvd, Ste 201, Encinitas, California 92024
Telephone: (760) 634-8800 Fax: (760) 452-7541

LICENSED ARCHITECT ROBERT D. WEBB JR. C-28036 OCTOBER 31, 2021 STATE OF CALIFORNIA

CHET. HARRITT ELEM. SCHOOL
LRC & CLASSROOM ADDITION
SANTEE SCHOOL DISTRICT

LIBRARY AUDIO-VISUAL DETAILS

Drawn: Author
Checked: Checker
Date:
Job: SSD-CFH-05

E4.7

REGISTERED PROFESSIONAL ENGINEER MICHAEL CHRISTOPHER JOHNSON NO.E 14781 Exp. 6-30-2021 ELECTRICAL STATE OF CALIFORNIA

JOHNSON CONSULTING ENGINEERS, INC.
Power | Lighting | Multimedia
Communications | Data Networking
12875 Brookprinter Place, Suite 300
Poway, CA 92064
P 858.679.4030 | F 858.513.0559
www.jce-inc.com

#19033 2/13/2020 2:00:34 PM

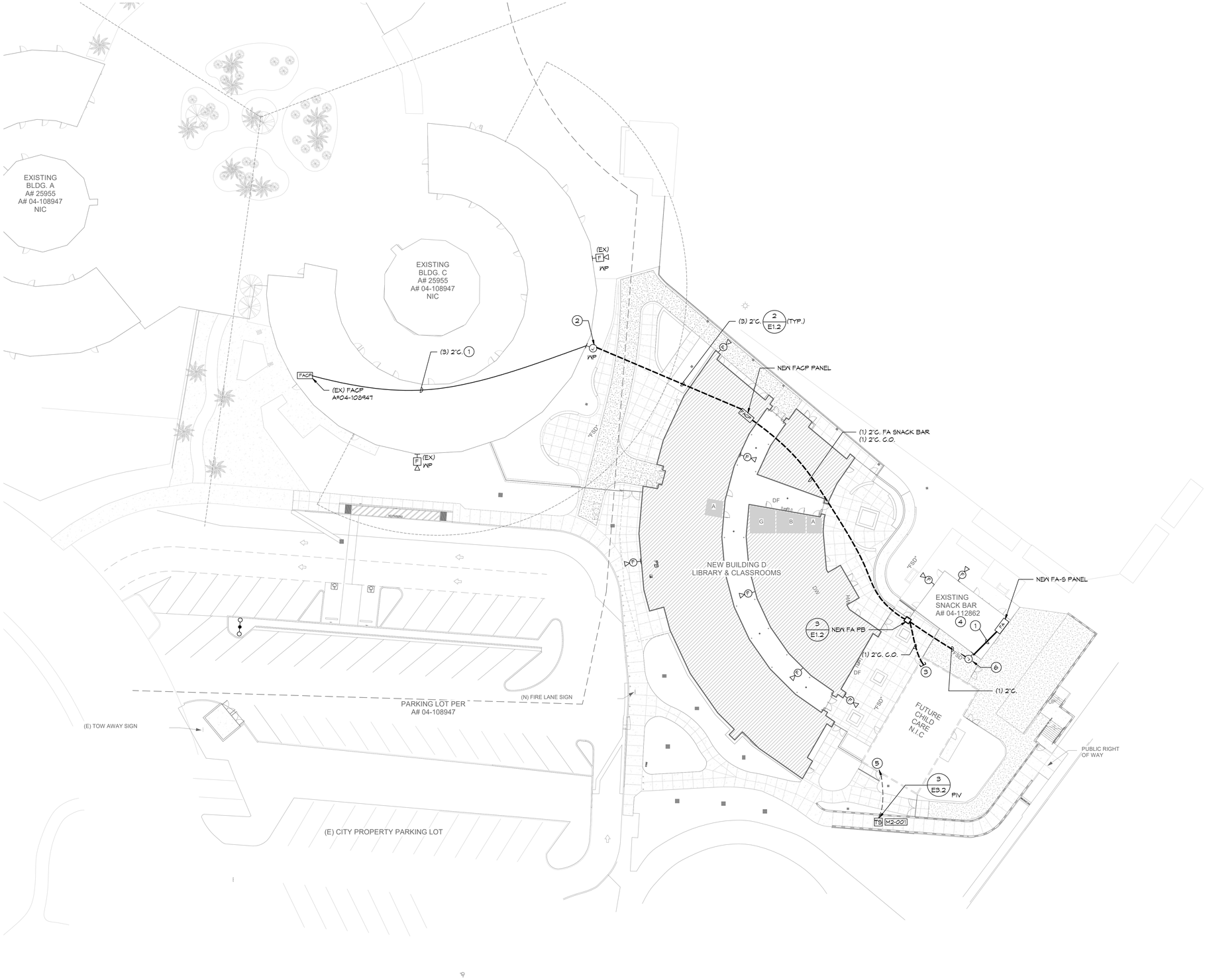

KEY NOTES:

1. ROUTE CONDUITS THROUGH ACCESSIBLE CEILING AREA.
2. ROUTE CONDUITS TO EXTERIOR MOUNTED J-BOX THEN UNDERGROUND.
3. STUB AND CAP BELOW GRADE FOR FUTURE.
4. SEE FLOOR PLAN FOR CONTINUATION.
5. 3/4"C. TO BUILDING FIRE ALARM PANEL.
6. NEW WALL MOUNTED J-BOX.

FIRE ALARM SYMBOLS LEGEND:

A1 — WALL MOUNTED WEATHERPROOF EXTERIOR SPEAKER MOUNTED +90" A.F.F. TO BOTTOM OF DEVICE (A1 = AUDIO CIRCUIT IDENTIFICATION) TAP AT 2 WATTS (U.O.N)

OVERALL FIRE ALARM SITE PLAN | 1" = 20'-0" | 1

IDENTIFICATION STAMP
DIV. OF THE STATE ARCHITECT
APP. 04-118693 INC:
REVIEWED FOR
SS ☑ FLS ☑ ACS ☑
DATE: 03.13.2020

Revison	Date

Consultant

Engineer

studiowc
ARCHITECTURE + ENGINEERING
515 Encinitas Blvd, Ste. 201, Encinitas, California 92024
Telephone: (760)753-6800 Fax: (760)452-7541

LICENSED ARCHITECT
ROBERT D. WEBB AJA
C-28036
OCTOBER 31, 2021
STATE OF CALIFORNIA

CHET. HARRITT ELEM. SCHOOL
LRC & CLASSROOM ADDITION
SANTEE SCHOOL DISTRICT

OVERALL FIRE ALARM SITE PLAN

Drawn: Author
Checked: Checker
Date:
Job: SSD-CFH-05

E5.0

REGISTERED PROFESSIONAL ENGINEER
NO.E 14781
Exp. 6-30-2021
ELECTRICAL
STATE OF CALIFORNIA

JOHNSON CONSULTING ENGINEERS, INC.
Power | Lighting | Multimedia
Communications | Data Networking
12875 Brookprinter Place, Suite 300
Poway, CA 92064
P 858.679.4030 | F 858.513.0559
www.jce-inc.com

#19033 2/13/2020 2:00:44 PM

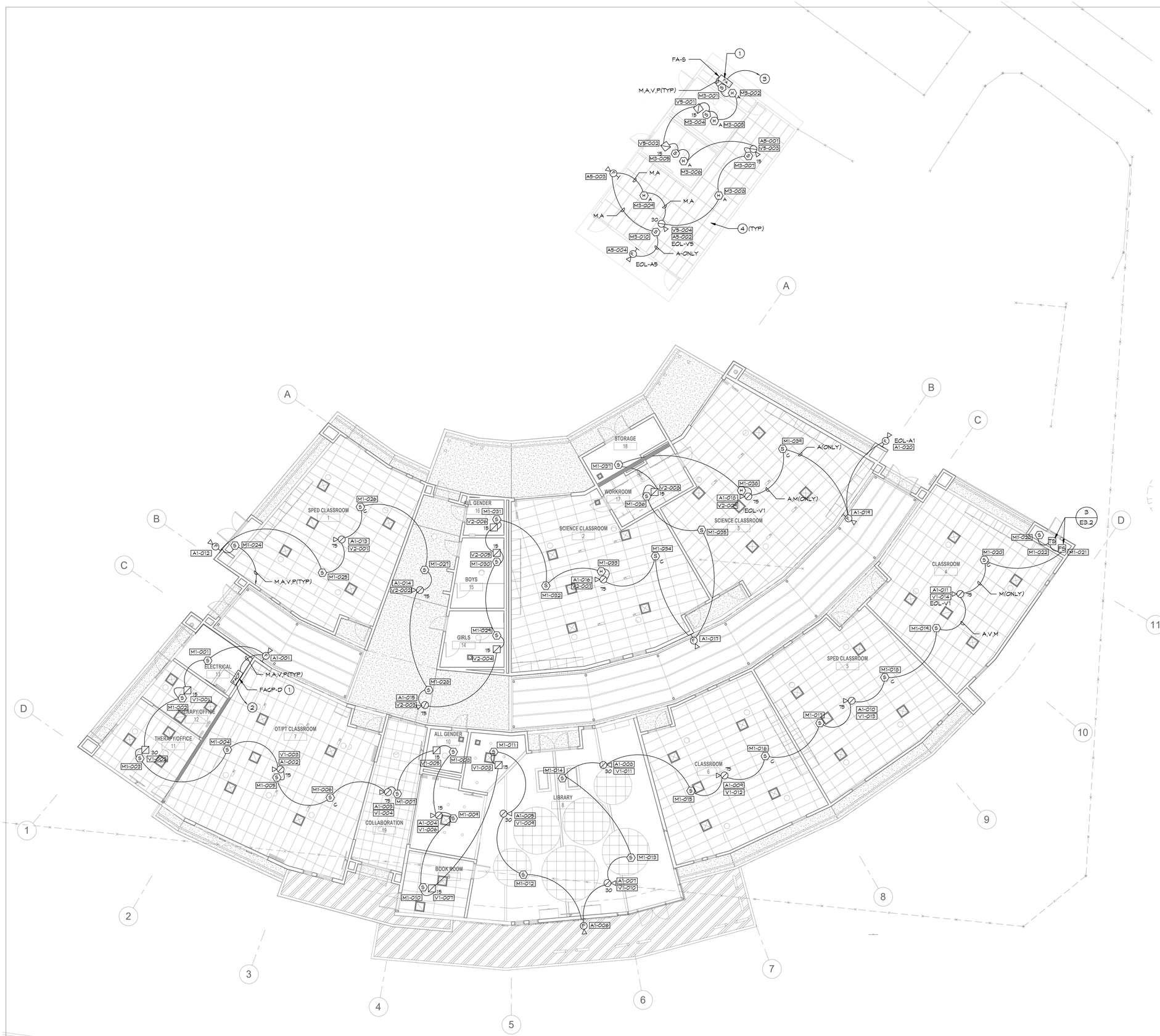

GENERAL NOTES:

1. REFERENCE ARCHITECTURAL INTERIOR ELEVATIONS FOR EXACT LOCATION OF ALL WALL MOUNTED DEVICES.
2. REFERENCE E5 AND E6 SERIES SHEETS FOR TYPICAL CONDUIT AND BACKBOX INSTALLATION DETAILS.
3. REFERENCE RISER DIAGRAMS FOR TYPICAL CONDUIT SIZES AND INITIATION ZONE CIRCUIT IDENTIFICATIONS.
4. REFERENCE MECHANICAL PLANS FOR EXACT LOCTION OF ALL DUCT DETECTORS AND SMOKE DAMPER LOCATIONS.
5. UNLESS OTHERWISE NOTED SOLID LINES BETWEEN DEVICES SHALL BE 1" E.M.T. ROUTED CONCEALED ABOVE CEILINGS OR IN WALLS. DASHED LINES INDICATE 3/4" P.V.C. UNDERGROUND CONDUIT. ALL WIRING TO BE PROVIDED PER MANUFACTURER SHOP DRAWINGS.
6. CONTRACTOR SHALL PROVIDE CEILING ACCESS PANEL AT ALL NON-LAYIN TYPE CEILINGS, WHERE HEAT DETECTOR ABOVE CEILING IS INDICATED.
7. PROVIDE WIRE PROTECTIVE GUARD OVER ALL FIRE ALARM DEVICES LOCATED IN THE FOLLOWING AREAS: GYMNASIUM, LOCKER ROOMS, SHOP AREAS, AND ANY OTHER AREA WHERE DEVICES MAY BE SUBJECT TO CONTACT.

KEY NOTES:

1. PROVIDE DEDICATED 120 VOLT CIRCUIT TO PANEL CONNECT TO "LOCK ON BREAKER", REFER TO POWER E5 SERIES SHEETS FOR CIRCUIT INFORMATION.
2. PROVIDE CONNECTION TO (EX) "FACP", REFER TO SITE PLANS SHEETS E1.1, AND E5.0
3. PROVIDE CONNECTION TO "FACP-D", REFER TO SITE PLANS SHEETS E1.1, AND E5.0 FOR ADDITIONAL INFORMATION
4. DISCONNECT AND REMOVE EXISTING FIRE ALARM DEVICES AND PROVIDE COVER PLATES

FIRE ALARM SYMBOLS LEGEND:

- V1 / 15 — CEILING MOUNTED FLASHING LIGHT STROBE (15 = STROBE CANDELA RATING) (V1 = VISUAL CIRCUIT IDENTIFICATION)
- V1 / A1 / 15 — CEILING MOUNTED COMBINATION SPEAKER/STROBE (15 = STROBE CANDELA RATING) (V1 = VISUAL CIRCUIT IDENTIFICATION) (A1= AUDIO CIRCUIT IDENTIFICATION) TAP AT 1/4 WATT (U.O.N.)
- A1 / H — WALL MOUNTED WEATHERPROOF EXTERIOR SPEAKER MOUNTED +90" A.F.F. TO BOTTOM OF DEVICE (A1 = AUDIO CIRCUIT IDENTIFICATION) TAP AT 2 WATTS (U.O.N.)
- S — CEILING MOUNTED SMOKE DETECTOR
- S/C — CEILING MOUNTED CO/SMOKE DETECTOR
- H/C — CEILING MOUNTED CO/HEAT DETECTOR SET AT LEVEL 6 THERMAL ALARM
- H — CEILING MOUNTED HEAT DETECTOR
- H/A — HEAT DETECTOR MOUNTED ABOVE CEILING (SEE GENERAL NOTE #6)
- FACP — MAIN FIRE ALARM CONTROL PANEL
- FA — REMOTE FIRE ALARM POWER EXTENDER
- DSM — DUAL SYNC MODULE (SEE RISER DIAGRAM FOR LOCATION)
- R — ADDRESSABLE RELAY MODULE
- M — ADDRESSABLE MONITOR MODULE
- EOL-A — END OF LINE RESISTOR AUDIO
- EOL-V — END OF LINE RESISTOR VISUAL

FIRE ALARM NOTE:
THIS FIRE ALARM DESIGN IS A COMPLETE PLAN SUBMITTAL IN ACCORDANCE WITH 2016 CBC 907.1.

FULLY AUTOMATIC FIRE ALARM DESIGN:
THIS PROJECT IS DESIGNED TO COMPLY WITH ALL REQUIREMENTS FOR A FULLY PROTECTED AUTOMATIC FIRE ALARM SYSTEM.

EXPANSION OF EXISTING SYSTEM:
THIS PROJECT ADDS TO AND OR MODIFIES AN EXISTING SYSTEM, PREVIOUSLY APPROVED BY DSA. ALL NEW COMPONENTS ARE COMPATIBLE WITH THE EXISTING SYSTEM EQUIPMENT.

LEVEL 1 FLOOR PLAN - FIRE ALARM | 1/8" = 1'-0" | 1

IDENTIFICATION STAMP
DIV. OF THE STATE ARCHITECT
APP. 04-118693 INC:
REVIEWED FOR
SS ☑ FLS ☑ ACS ☑
DATE: 03.13.2020

Revison	Date

Consultant

Engineer

studiowc
ARCHITECTURE + ENGINEERING
515 Encinitas Blvd, Ste 201, Encinitas, California 92024
Telephone: (760) 634-8800 Fax: (760) 452-7341

LICENSED ARCHITECT
ROBERT D. WEBB
C-28036
OCTOBER 31, 2021
STATE OF CALIFORNIA

CHET. HARRITT ELEM. SCHOOL
LRC & CLASSROOM ADDITION
SANTEE SCHOOL DISTRICT

FIRE ALARM FLOOR PLAN

Drawn: Author
Checked: Checker
Date:
Job: SSD-CFH-05

E5.1

JOHNSON CONSULTING ENGINEERS, INC.
Power | Lighting | Multimedia
Communications | Data Networking
12875 Brookprinter Place, Suite 300
Poway, CA 92064
P 858.679.4030 | F 858.513.0559
www.jce-inc.com

REGISTERED PROFESSIONAL ENGINEER
MARK CHRISTOPHER KOSSE-HARRIS
NO.E 14781
Exp. 6-30-2021
ELECTRICAL
STATE OF CALIFORNIA

#19033 2/13/2020 2:00:44 PM

FCI MODEL E3					
	SYM	MODEL NO.	DESCRIPTION	C.S.F.M. LISTING	MFG.
	FACP	FCI-E3	FIRE ALARM CONTROL PANEL/VOICE EVAC	7165-1703:0125	GAMEWELL FCI
	FPA	GFPS-6	FIRE ALARM POWER SUPPLY	7300-1703:0167	GAMEWELL FCI
	DSM	SERIES DMS	SYNC MODULE	7300-0785:0132	COOPER WHEELOCK
			BATTERIES		
	S	ASD-PL2F	INTELLIGENT SMOKE DETECTOR	7272-1703:0121	GAMEWELL FCI
		B210LP	SENSOR BASE	7300-1653:0109	SYSTEM SENSOR
	SC	MCS-COF	ADVANCED MUILTI-CRITERIA FIRE/CO DETECTOR	7275-1703:0175	GAMEWELL FCI
		B200S	SENSOR SOUNDER BASE	7300-1653:0213	SYSTEM SENSOR
	H	ATD-RL2F	INTELLIGENT HEAT DETECTOR	7270-1703:0115	GAMEWELL FCI
		B210LP	SENSOR BASE	7300-1653:0109	SYSTEM SENSOR
	HA	ATD-HL2F	INTELLIGENT HEAT DETECTOR (ABOVE CEILING)	7270-1703:0115	GAMEWELL FCI
		B501	SENSOR BASE	7300-1653:0109	SYSTEM SENSOR
	HC	MCS-COF	ADVANCED MUILTI-CRITERIA FIRE/CO DETECTOR SET@ LEVEL 6	7275-1703:0175	GAMEWELL FCI
		B200S	SENSOR SOUNDER BASE	7300-1653:0213	SYSTEM SENSOR
		ET1010	EXTERIOR SPEAKER W/WBB BACKBOX	7320-0785:0105	COOPER WHEELOCK
		LSTC	STROBE (15/30/75/110) cd (CEIL MNT)	7125-0785:0180	COOPER WHEELOCK
		LSPSTC	SPEAKER/STROBE - CEILING	7125-0785:0178	COOPER WHEELOCK
	M	AMM-2F	ADDRESSABLE MONITOR MODULE	7300-1703:0102	GAMEWELL FCI
	R	AOM-2RF	ADDRESSABLE RELAY MODULE	7300-1703:0102	GAMEWELL FCI
	R1	RIC-1	120 VOLT RELAY MODULE	7300-1004:0101	SAE INC
		TYPE FPL	SIGNAL LINE CIRCUIT CONDUCTORS ("M")	7161-0859:0101	WEST PENN
		TYPE THHN	AUDIO VISUAL AND POWER CONDUCTORS (AV,P)	N/A	SOUTHWIRE

✦ IF OTHER MANUFACTURER IS USED IT IS TO BE UL. AND CSFM LISTED.

WIRING SCHEDULE

DES	CONDUCTOR TYPE	WIRE COLOR	CIRCUIT TYPE
M	(1) 1 PR #14 TWISTED SHIELDED	RED/BLACK/SHIELD	SIGNAL LINE CIRCUIT
A	(2) #12 THHN (UON ON CALCS)	BLUE/WHITE	NOTIFICATION APP. CIRCUIT (NAC)
V	(2) #12 THHN (UON ON CALCS)	GREEN/BLUE	NOTIFICATION APP. CIRCUIT (NAC)
P	(2) #12 THHN	RED/BLACK	POWER

CLEAR SPACE REQUIREMENTS AT
FIRE ALARM PULL STATIONS:

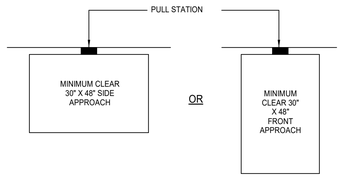

ANNUNCIATOR ZONE SCHEDULE

	ROOM SMOKE OR HEAT DETECTORS	ABOVE CEILING HEAT DETECTORS	MANUAL PULL STATIONS	DUCT DETECTORS	SPRINKLER SYSTEM	TROUBLE INDICATION
BLDG. D	YES	YES	YES	YES	N/A	YES

NOTES:
1. ALL SMOKE, CO DETECTORS, HEAT DETECTORS ABOVE CEILING DETECTORS, DUCT DETECTORS MANUAL PULL STATIONS, FLOW SWITCHES, TAMPER SWITCHES SHALL BE INDIVIDUALLY ADDRESSABLE.
2. PROVIDE (1) ANNUNCIATOR WHICH WILL PROVIDE LED LIGHT INDICATORS TO IDENTIFY THE ABOVE ZONE SCHEDULE (IN ADDITION TO ANNUNCIATOR NOTED IN NOTE # 3).
3. PROVIDE (1) 32 CHARACTER BACK-LIGHTED ALPHA-NUMERIC DISPLAY ANNUNCIATOR WITH KEYPAD FOR OPERATOR CONTROL, PROGRAMMING AND TESTING.

FIRE ALARM MONITORING NOTE:

1. AUTOMATIC FIRE ALARM SYSTEMS SHALL TRANSMIT THE ALARM, SUPERVISORY AND TROUBLE SIGNALS TO AN APPROVED SUPERVISING STATION AS REQUIRED BY NFPA 72 AS AMENDED BY CFC SECTION 907. THE SUPERVISING STATION SHALL BE LISTED AS EITHER UUFX OR UUJS BY UNDERWRITERS LABORATORY OR SHALL MEET THE REQUIREMENTS OF FACTORY MUTUAL RESEARCH APPROVAL STANDARD 3011, SUPERVISION OF SYSTEM AND LEASED TELEPHONE LINES SHALL BE ARRANGED BY OWNER.

FIRE ALARM GENERAL REQUIREMENTS:

1. THE COMPLETE INSTALLATION SHALL BE REVIEWED AND APPROVED BY THE ABOVE LOCAL MANUFACTURERS REPRESENTATIVE. SEE SPECIFICATIONS (28 30 00), FOR ADDITIONAL CONTRACTOR QUALIFICATIONS AND REQUIREMENTS.
2. UNLESS OTHERWISE NOTED SOLID LINES BETWEEN DEVICES SHALL BE 1" E.M.T. ROUTED CONCEALED ABOVE CEILINGS OR IN WALLS. DASHED LINES INDICATE 3/4" P.V.C. UNDERGROUND CONDUIT. ALL WIRING TYPES AND QUANTITES SHOWN ARE FOR INFORMATION ONLY. THE CONTRACTOR SHALL PROVIDE ALL WIRING AS REQUIRED TO MAKE A FULLY OPERATIONAL SYSTEM. SHOP DRAWINGS AND OR AS-BUILT DOCUMENTS SHALL INDICATE ALL WIRING PROVIDED.
3. THE AUDIBILITY OF FIRE ALARM WARNING DEVICES SHALL BE AUDIBLE THROUGH THE OCCUPANCY WITH A MINIMAL SOUND LEVEL 15 db's OVER THE AMBIENT NOISE LEVEL. ADD ADDITIONAL DEVICES AS REQUIRED.
4. UPON COMPLETION OF THE INSTALLATION OF THE FIRE ALARM SYSTEM, A REACCEPTANCE TEST OF THE ENTIRE SYSTEM SHALL BE PERFORMED IN THE PRESENCE OF THE ENFORCING AGENCY AND IN ACCORDANCE WITH SPECIFICATIONS (28 30 00). THE CONTRACTOR SHALL FURNISH 2b METERS AND ALL OTHER EQUIPMENT TO PERFORM THESE TESTS.
5. ALL CONDUIT PENETRATIONS THROUGH FIRE RATED PARTITIONS SHALL PREVENT THE PASSAGE OF HEAT, SMOKE AND FIRE GASES. ALL PENETRATIONS SHALL COMPLY WITH U.L. ASSEMBLY XL-1001. REFER TO THROUGH-PENETRATION FIRESTOP DETAIL ON THE DETAIL SHEET.
6. ALL OPERATING HARDWARE AT INITIATING DEVICES SHALL NOT REQUIRE TIGHT GRASPING, PINCHING OR TWISTING OF THE WRIST, AND THE FORCE REQUIRED TO OPERATE SHALL BE LESS THAN 5 POUNDS.

MAXIMUM NUMBER OF CONDUCTORS IN TRADE SIZES OF CONDUIT OR TUBING MINIMUM CONDUIT SIZE FOR THIS PROJECT IS 3/4"

CONDUIT TRADE SIZE (INCHES)		1/2	3/4	1	1 1/4	1 1/2	2	2 1/2	3	3 1/2	4	5
TYPE LETTERS	CONDUCTOR SIZE AWG, kcmil											
THWN	14 12	13 10	24 18	39 29	69 51	94 70	154 114	164				
THHN	10 8	8 3	11 5	18 9	32 16	44 22	73 36	104 51	160 79	106	136	

TRADE SIZE	INTERNAL DIAMETER INCHES	AREA—SQUARE INCHES								
		100% INCHES	PERCENT REDUCTION PER NUMBER OF 18AWG TWISTED SHIELD PAIRS							
			OVER 2 COND. 40%	1	2	3	4	5	6	7	8
1/2	.622	.30	.12	38%	66%	99%	X	X	X	X	X
3/4	.824	.53	.21	19%	38%	57%	76%	95%	X	X	X
1	1.049	.86	.34	12%	24%	36%	48%	60%	72%	84%	96%
1 1/4	1.380	1.50	.60	7%	14%	21%	28%	35%	42%	49%	56%
1 1/2	1.610	2.04	.82	5%	10%	15%	20%	25%	30%	35%	40%
2	2.067	3.36	1.34	3%	6%	9%	12%	15%	18%	21%	24%

FIRE ALARM SEQUENCE OF OPERATION

ACTION \ DEVICE	MANUAL PULL STATION	AREA/DUCT SMOKE/CO/HEAT DETECTOR	AC POWER FAILURE	SPRINKLER ACTIVATION TAMPER SW.	SPRINKLER ACTIVATION FLOW SW.
SOUND ALARM TROUGHOUT BLDG.	YES	YES	NO	N/A	YES
ACTIVATE RELAY FOR MONITORING	YES	YES	YES	N/A	YES
ANNUNCIATE AT PANEL AND ANNUNCIATOR	YES	YES	YES	N/A	YES
SOUND TROUBLE BUZZER	ON WIRING FAULT	ON WIRING FAULT	YES	N/A	ON WIRING FAULT
SOUND SPRINKLER BELL	NO	NO	NO	N/A	YES
REPORT TO MONITORING STATION	YES	YES	YES	YES	YES
INITIATE SHUTDOWN OF HVAC UNITS	YES	YES	NO	N/A	YES

IDENTIFICATION STAMP
DIV. OF THE STATE ARCHITECT
APP. 04-118693 INC:
REVIEWED FOR
SS ☑ FLS ☑ ACS ☑
DATE: 03.13.2020

Revision	Date

Consultant

Engineer

studiowc
ARCHITECTURE + ENGINEERING
515 Encinitas Blvd, Ste 201, Encinitas, California 92024
Telephone: (760) 634-8800 Fax: (760) 452-7341

LICENSED ARCHITECT
ROBERT D. WEBB
C-28036
OCTOBER 31, 2021
STATE OF CALIFORNIA

CHET. HARRITT ELEM. SCHOOL
LRC & CLASSROOM ADDITION
SANTEE SCHOOL DISTRICT

FIRE ALARM SCHEDULES AND NOTES

Drawn: Author
Checked: Checker
Date:
Job: SSD-CFH-05

E5.2

JOHNSON CONSULTING ENGINEERS, INC.
Power | Lighting | Multimedia
Communications | Data Networking
12875 Brookprinter Place, Suite 300
Poway, CA 92064
P 858.679.4030 | F 858.513.0559
www.jce-inc.com

REGISTERED PROFESSIONAL ENGINEER
MICHAEL REESE HANSEN
NO. E 14781
Exp. 6-30-2021
ELECTRICAL
STATE OF CALIFORNIA

#19033 2/13/2020 2:00:50 PM

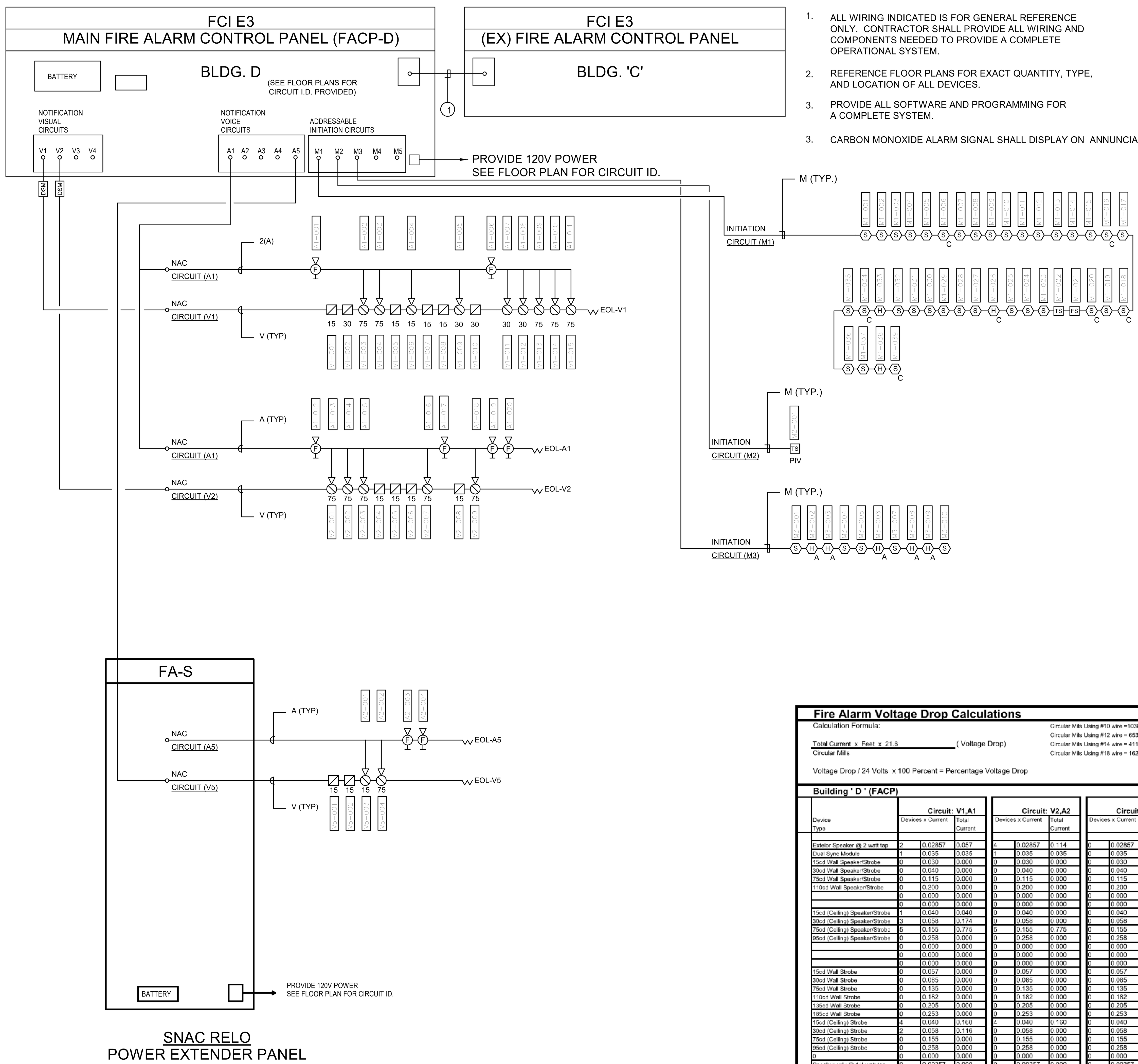

SNAC RELO
POWER EXTENDER PANEL

GENERAL NOTES:

1. ALL WIRING INDICATED IS FOR GENERAL REFERENCE ONLY. CONTRACTOR SHALL PROVIDE ALL WIRING AND COMPONENTS NEEDED TO PROVIDE A COMPLETE OPERATIONAL SYSTEM.
2. REFERENCE FLOOR PLANS FOR EXACT QUANTITY, TYPE, AND LOCATION OF ALL DEVICES.
3. PROVIDE ALL SOFTWARE AND PROGRAMMING FOR A COMPLETE SYSTEM.
3. CARBON MONOXIDE ALARM SIGNAL SHALL DISPLAY ON ANNUNCIATOR

KEYNOTES

(1) FIRE ALARM SLC

Fire Alarm Voltage Drop Calculations

Calculation Formula:

Total Current x Feet x 21.6 / Circular Mills (Voltage Drop)

Circular Mils Using #10 wire =10380
Circular Mils Using #12 wire = 6530
Circular Mils Using #14 wire = 4110
Circular Mils Using #18 wire = 1620

Voltage Drop / 24 Volts x 100 Percent = Percentage Voltage Drop

Building ' D ' (FACP)

Device Type	Circuit: V1,A1 Devices	x Current	Total Current	Circuit: V2,A2 Devices	x Current	Total Current	Circuit: 0 Devices	x Current	Total Current	Circuit: 0 Devices	x Current	Total Current
Exteior Speaker @ 2 watt tap	2	0.02857	0.057	4	0.02857	0.114	0	0.02857	0.000	0	0.02857	0.000
Dual Sync Module	1	0.035	0.035	1	0.035	0.035	0	0.035	0.000	0	0.035	0.000
15cd Wall Speaker/Strobe	0	0.030	0.000	0	0.030	0.000	0	0.030	0.000	0	0.030	0.000
30cd Wall Speaker/Strobe	0	0.040	0.000	0	0.040	0.000	0	0.040	0.000	0	0.040	0.000
75cd Wall Speaker/Strobe	0	0.115	0.000	0	0.115	0.000	0	0.115	0.000	0	0.115	0.000
110cd Wall Speaker/Strobe	0	0.200	0.000	0	0.200	0.000	0	0.200	0.000	0	0.200	0.000
	0	0.000	0.000	0	0.000	0.000	0	0.000	0.000	0	0.000	0.000
	0	0.000	0.000	0	0.000	0.000	0	0.000	0.000	0	0.000	0.000
15cd (Ceiling) Speaker/Strobe	1	0.040	0.040	0	0.040	0.000	0	0.040	0.000	0	0.040	0.000
30cd (Ceiling) Speaker/Strobe	3	0.058	0.174	0	0.058	0.000	0	0.058	0.000	0	0.058	0.000
75cd (Ceiling) Speaker/Strobe	5	0.155	0.775	5	0.155	0.775	0	0.155	0.000	0	0.155	0.000
95cd (Ceiling) Speaker/Strobe	0	0.258	0.000	0	0.258	0.000	0	0.258	0.000	0	0.258	0.000
	0	0.000	0.000	0	0.000	0.000	0	0.000	0.000	0	0.000	0.000
	0	0.000	0.000	0	0.000	0.000	0	0.000	0.000	0	0.000	0.000
	0	0.000	0.000	0	0.000	0.000	0	0.000	0.000	0	0.000	0.000
15cd Wall Strobe	0	0.057	0.000	0	0.057	0.000	0	0.057	0.000	0	0.057	0.000
30cd Wall Strobe	0	0.085	0.000	0	0.085	0.000	0	0.085	0.000	0	0.085	0.000
75cd Wall Strobe	0	0.135	0.000	0	0.135	0.000	0	0.135	0.000	0	0.135	0.000
110cd Wall Strobe	0	0.182	0.000	0	0.182	0.000	0	0.182	0.000	0	0.182	0.000
135cd Wall Strobe	0	0.205	0.000	0	0.205	0.000	0	0.205	0.000	0	0.205	0.000
185cd Wall Strobe	0	0.253	0.000	0	0.253	0.000	0	0.253	0.000	0	0.253	0.000
15cd (Ceiling) Strobe	4	0.040	0.160	4	0.040	0.160	0	0.040	0.000	0	0.040	0.000
30cd (Ceiling) Strobe	2	0.058	0.116	0	0.058	0.000	0	0.058	0.000	0	0.058	0.000
75cd (Ceiling) Strobe	0	0.155	0.000	0	0.155	0.000	0	0.155	0.000	0	0.155	0.000
95cd (Ceiling) Strobe	0	0.258	0.000	0	0.258	0.000	0	0.258	0.000	0	0.258	0.000
0	0	0.000	0.000	0	0.000	0.000	0	0.000	0.000	0	0.000	0.000
Speaker only @ 1/4 watt tap	0	0.00357	0.000	0	0.00357	0.000	0	0.00357	0.000	0	0.00357	0.000
Speaker only @ 2 watt tap	0	0.02857	0.000	0	0.02857	0.000	0	0.02857	0.000	0	0.02857	0.000
		Total	1.357		Total	1.084		Total	0.000		Total	0.000
Circuit Length:	370			350			0			0		
Circular mils:	6530			6530			6530			6530		
Volts dropped:	1.66			1.26			0.00			0.00		
Percent voltage drop:	**6.92%**			**5.23%**			**0.00%**			**0.00%**		

SNACK BAR (FA-S)

Device Type	Circuit: V5,A5 Devices	x Current	Total Current	Circuit: 0 Devices	x Current	Total Current	Circuit: 0 Devices	x Current	Total Current	Circuit: 0 Devices	x Current	Total Current
Exteior Speaker @ 2 watt tap	2	0.02857	0.057	0	0.02857	0.000	0	0.02857	0.000	0	0.02857	0.000
Dual Sync Module	0	0.035	0.000	0	0.035	0.000	0	0.035	0.000	0	0.035	0.000
15cd Wall Speaker/Strobe	0	0.030	0.000	0	0.030	0.000	0	0.030	0.000	0	0.030	0.000
30cd Wall Speaker/Strobe	0	0.040	0.000	0	0.040	0.000	0	0.040	0.000	0	0.040	0.000
75cd Wall Speaker/Strobe	0	0.115	0.000	0	0.115	0.000	0	0.115	0.000	0	0.115	0.000
110cd Wall Speaker/Strobe	0	0.200	0.000	0	0.200	0.000	0	0.200	0.000	0	0.200	0.000
	0	0.000	0.000	0	0.000	0.000	0	0.000	0.000	0	0.000	0.000
	0	0.000	0.000	0	0.000	0.000	0	0.000	0.000	0	0.000	0.000
15cd (Ceiling) Speaker/Strobe	2	0.040	0.080	0	0.040	0.000	0	0.040	0.000	0	0.040	0.000
30cd (Ceiling) Speaker/Strobe	0	0.058	0.000	0	0.058	0.000	0	0.058	0.000	0	0.058	0.000
75cd (Ceiling) Speaker/Strobe	2	0.155	0.310	0	0.155	0.000	0	0.155	0.000	0	0.155	0.000
95cd (Ceiling) Speaker/Strobe	0	0.258	0.000	0	0.258	0.000	0	0.258	0.000	0	0.258	0.000
	0	0.000	0.000	0	0.000	0.000	0	0.000	0.000	0	0.000	0.000
	0	0.000	0.000	0	0.000	0.000	0	0.000	0.000	0	0.000	0.000
	0	0.000	0.000	0	0.000	0.000	0	0.000	0.000	0	0.000	0.000
15cd Wall Strobe	0	0.057	0.000	0	0.057	0.000	0	0.057	0.000	0	0.057	0.000
30cd Wall Strobe	0	0.085	0.000	0	0.085	0.000	0	0.085	0.000	0	0.085	0.000
75cd Wall Strobe	0	0.135	0.000	0	0.135	0.000	0	0.135	0.000	0	0.135	0.000
110cd Wall Strobe	0	0.182	0.000	0	0.182	0.000	0	0.182	0.000	0	0.182	0.000
135cd Wall Strobe	0	0.205	0.000	0	0.205	0.000	0	0.205	0.000	0	0.205	0.000
185cd Wall Strobe	0	0.253	0.000	0	0.253	0.000	0	0.253	0.000	0	0.253	0.000
15cd (Ceiling) Strobe	0	0.040	0.000	0	0.040	0.000	0	0.040	0.000	0	0.040	0.000
30cd (Ceiling) Strobe	0	0.058	0.000	0	0.058	0.000	0	0.058	0.000	1	0.058	0.058
75cd (Ceiling) Strobe	0	0.155	0.000	0	0.155	0.000	0	0.155	0.000	1	0.155	0.155
95cd (Ceiling) Strobe	0	0.258	0.000	0	0.258	0.000	0	0.258	0.000	0	0.258	0.000
0	0	0.000	0.000	0	0.000	0.000	0	0.000	0.000	0	0.000	0.000
Speaker only @ 1/4 watt tap	0	0.00357	0.000	0	0.00357	0.000	0	0.00357	0.000	0	0.00357	0.000
Speaker only @ 2 watt tap	0	0.02857	0.000	0	0.02857	0.000	0	0.02857	0.000	0	0.02857	0.000
		Total	0.447		Total	0.000		Total	0.000		Total	0.213
Circuit Length:	100			0			0			0		
Circular mils:	6530			6530			6530			6530		
Volts dropped:	0.15			0.00			0.00			0.00		
Percent voltage drop:	**0.62%**			**0.00%**			**0.00%**			**0.00%**		

Main Fire Alarm Control Panel
FACP FCI E3 Battery Calculations
Building ' D ' (FACP)

Type of Device Or Equipment	Standby Amperage Qty	Current	Total	Alarm Amperage Quantity	Current	Total
Control Panel Devices :						
Master Control Assembly	1	0.0810	0.0810	1	0.1500	0.1500
Communication Module	1	0.2000	0.2000	1	0.2500	0.2500
Voice Gateway	1	0.0003	0.0003	1	0.0003	0.0003
Additional SLC Modules	1	0.0004	0.0004	1	0.0070	0.0070
AMP Card AM-50	4	0.0490	0.1960	4	2.3000	9.2000
Communicator Transmitter	1	0.0180	0.0180	1	0.0180	0.0180
Signal Line Circuit Devices:						
Smoke Detector	35	0.0003	0.0116	35	0.0070	0.2450
Heat Detector	12	0.0002	0.0024	12	0.0000	0.0000
Relay Module	10	0.0003	0.0030	4	0.0003	0.0012
Monitor Module	0	0.0004	0.0000	0	0.0070	0.0000
Remote Annunciator	1	0.0300	0.0300	1	0.0650	0.0650
Beam Detector (REC. & TRANS)	0	0.0040	0.0000	0	0.0150	0.0000
Extender Panel (NAC)	0	0.0880	0.0000	0	0.1950	0.0000
Pull Station	0	0.0003	0.0000	0	0.000	0.000
Exteior Speaker @ 2 watt tap	6	0.000	0.0000	6	0.02857	0.171
Dual Sync Module	2	0.000	0.000	2	0.035	0.070
15cd Wall Speaker/Strobe				0	0.030	0.000
30cd Wall Speaker/Strobe				0	0.040	0.000
75cd Wall Speaker/Strobe				0	0.115	0.000
110cd Wall Speaker/Strobe				0	0.200	0.000
				0	0.000	0.000
				0	0.000	0.000
15cd (Ceiling) Speaker/Strobe				1	0.040	0.040
30cd (Ceiling) Speaker/Strobe				3	0.058	0.174
75cd (Ceiling) Speaker/Strobe				10	0.155	1.550
95cd (Ceiling) Speaker/Strobe				0	0.258	0.000
				0	0.000	0.000
				0	0.000	0.000
				0	0.000	0.000
15cd Wall Strobe				0	0.057	0.000
30cd Wall Strobe				0	0.085	0.000
75cd Wall Strobe				0	0.135	0.000
110cd Wall Strobe				0	0.182	0.000
135cd Wall Strobe				0	0.205	0.000
185cd Wall Strobe				0	0.253	0.000
15cd (Ceiling) Strobe				8	0.040	0.320
30cd (Ceiling) Strobe				2	0.058	0.116
75cd (Ceiling) Strobe				0	0.155	0.000
95cd (Ceiling) Strobe				0	0.258	0.000
0				0	0.000	0.000
Speaker only @ 1/4 watt tap				0	0.00357	0.000
Speaker only @ 2 watt tap				0	0.02857	0.000
Total Standby Amperage			**0.543**	**Total Alarm Amperage**		**12.378**

Standby Time Required

24 Hours x Total Standby Amperage = 24 x 0.543 = 13.024 Amp Hours

Alarm Time Required

.25 (15 Min.) x Total Alarm Amperage = 0.25 x 12.378 = 3.094 Amp Hours

Total Required = **16.118** Amp Hours
x120% = 19.341696
Provide Battery & Minimum Battery Amp Hour Required = **30** Amp Hours

SNACK BAR (FA-S)
Remote Extender Panel
Supplementary Notification Appliance Circuit Battery Calculations

Type of Device Or Equipment	Standby Amperage Qty	Current	Total	Alarm Amperage Quantity	Current	Total
Exteior Speaker @ 2 watt tap	2	0.000	0.000	2	0.02857	0.057
Dual Sync Module	0	0.000	0.000	0	0.035	0.000
15cd Wall Speaker/Strobe				0	0.030	0.000
30cd Wall Speaker/Strobe				0	0.040	0.000
75cd Wall Speaker/Strobe				0	0.115	0.000
110cd Wall Speaker/Strobe				0	0.200	0.000
				0	0.000	0.000
				0	0.000	0.000
15cd (Ceiling) Speaker/Strobe				2	0.040	0.080
30cd (Ceiling) Speaker/Strobe				0	0.058	0.000
75cd (Ceiling) Speaker/Strobe				2	0.155	0.310
95cd (Ceiling) Speaker/Strobe				0	0.258	0.000
				0	0.000	0.000
				0	0.000	0.000
				0	0.000	0.000
15cd Wall Strobe				0	0.057	0.000
30cd Wall Strobe				0	0.085	0.000
75cd Wall Strobe				0	0.135	0.000
110cd Wall Strobe				0	0.182	0.000
135cd Wall Strobe				0	0.205	0.000
185cd Wall Strobe				0	0.253	0.000
15cd (Ceiling) Strobe				0	0.040	0.000
30cd (Ceiling) Strobe				0	0.058	0.000
75cd (Ceiling) Strobe				0	0.155	0.000
95cd (Ceiling) Strobe				0	0.258	0.000
0				0	0.000	0.000
Speaker only @ 1/4 watt tap				0	0.00357	0.000
Speaker only @ 2 watt tap				0	0.02857	0.000
Total Standby Amperage			**0.000**	**Total Alarm Amperage**		**0.447**

Standby Time Required

24 Hours x Total Standby Amperage = 24 x 0.000 = 0.000 Amp Hours

Alarm Time Required

.25(1 5 Min.) x Total Alarm Amperage = .25 x 0.447 = 0.112 Amp Hours

Total Required = **0.112** Amp Hours
x120% = 0.134142
Provide Battery & Minimum Battery Amp Hour Required = **5** Amp Hours

IDENTIFICATION STAMP
DIV. OF THE STATE ARCHITECT
APP. 04-118693 INC:
REVIEWED FOR
SS ☑ FLS ☑ ACS ☑
DATE: 03.13.2020

Date	Revison	Consultant	Engineer

studioWC
ARCHITECTURE + ENGINEERING
515 Encinitas Blvd. Ste. 201, Encinitas, California 92024
Telephone: (760)753-6800 Fax: (760)452-7541

LICENSED ARCHITECT ROBERT D. WEBB A.I.A. C-28036 OCTOBER 31, 2021 STATE OF CALIFORNIA

CHET. HARRITT ELEM. SCHOOL
LRC & CLASSROOM ADDITION
SANTEE SCHOOL DISTRICT

FIRE ALARM RISER AND CALCULATIONS

Drawn: Author
Checked: Checker
Date:
Job: SSD-CFH-05

E5.3

REGISTERED PROFESSIONAL ENGINEER MONICA GOESE-HANSEN NO.E 14781 Exp. 6-30-2021 ELECTRICAL STATE OF CALIFORNIA

JOHNSON CONSULTING ENGINEERS, INC.
Power | Lighting | Multimedia
Communications | Data Networking
12875 Brookprinter Place, Suite 300
Poway, CA 92064
P 858.679.4030 | F 858.513.0559
www.jce-inc.com

#19033 2/13/2020 2:00:52 PM

GENERAL NOTES:

1. REFERENCE MECHANICAL PLANS FOR EXACT EQUIPMENT LOCATIONS PRIOR TO ROUGH-IN.
2. DASHED EQUIPMENT INDICATES THAT EQUIPMENT IS LOCATED WITHIN CEILING SPACE. ALL OTHER EQUIPMENT IS ROOF MOUNTED (U.O.N.).
3. ALL CONDUIT FEEDERS TO ROOF MOUNTED EQUIPMENT SHALL BE RUN CONCEALED IN CEILING SPACE WHERE EQUIPMENT CURBS ARE PROVIDED. ROUTE FEEDER UP THROUGH CURB TO EQUIPMENT DISCONNECT.
4. REFERENCE SHEET E6 SERIES MECHANICAL EQUIPMENT SCHEDULE FOR CONDUIT, WIRE AND DISCONNECT REQUIREMENTS.
5. REFERENCE E5. SERIES SHEETS FOR UNITS WHICH REQUIRE DUCT TYPE SMOKE DETECTOR CONNECTIONS.

KEY NOTES:

1. LOCATED ON FIRST FLOOR. POWERED FROM ROOFTOP UNIT. SEE MECHANICAL DRAWINGS FOR ADDITIONAL INFO.

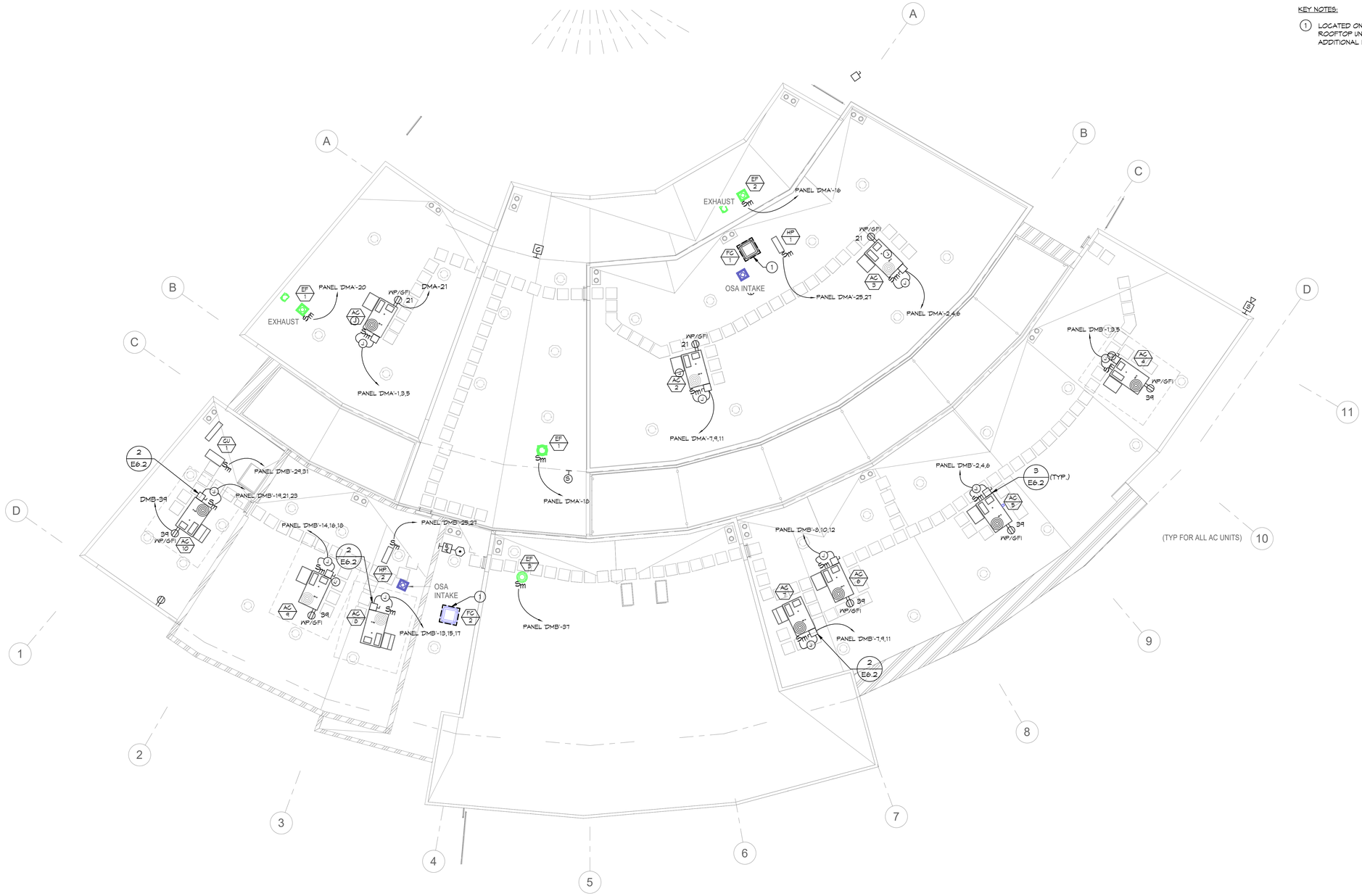

ROOF PLAN | 1/8" = 1'-0" | 1

IDENTIFICATION STAMP
DIV. OF THE STATE ARCHITECT
APP. 04-118693 INC:
REVIEWED FOR
SS ☑ FLS ☑ ACS ☑
DATE: 03.13.2020

Revison	Date

Consultant

Engineer

studiowc
ARCHITECTURE + ENGINEERING
515 Encinitas Blvd, Ste. 201, Encinitas, California 92024
Telephone: (760)753-6800 Fax: (760)452-7541

LICENSED ARCHITECT
ROBERT D. WEBB AIA
C-28036
OCTOBER 31, 2021
STATE OF CALIFORNIA

CHET. HARRITT ELEM. SCHOOL
LRC & CLASSROOM ADDITION
SANTEE SCHOOL DISTRICT

ROOF PLAN

Drawn: Author
Checked: Checker
Date:
Job: SSD-CFH-05

E6.1

REGISTERED PROFESSIONAL ENGINEER
NO.E 14781
Exp. 6-30-2021
ELECTRICAL
STATE OF CALIFORNIA

JOHNSON
CONSULTING ENGINEERS, INC.
Power | Lighting | Multimedia
Communications | Data Networking
12875 Brookprinter Place, Suite 300
Poway, CA 92064
P 858.679.4030 | F 858.513.0559
www.jce-inc.com

#19033 2/13/2020 2:00:54 PM

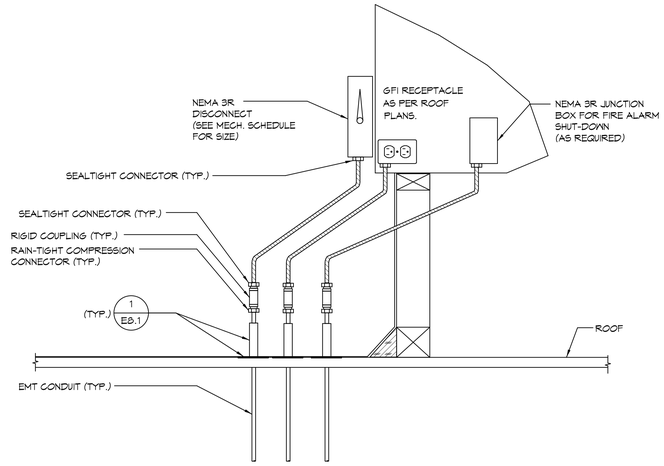

A/C UNIT CONNECTION DETAIL — 1 / E6.2
NO SCALE

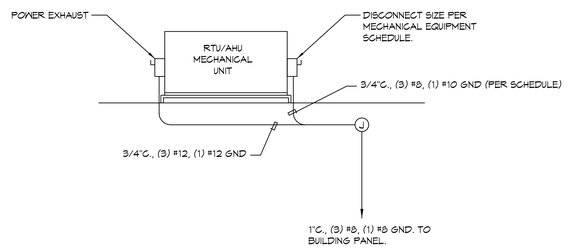

TYPICAL MECHANICAL UNIT COMBINATION FEEDER DETAIL (40A) — 2 / E6.2
NO SCALE

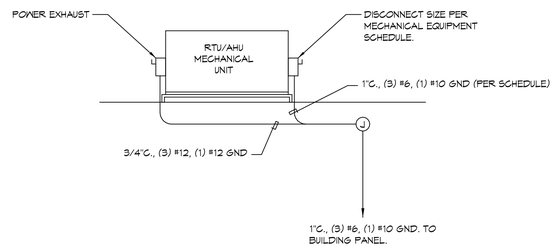

TYPICAL MECHANICAL UNIT COMBINATION FEEDER DETAIL (45A) — 3 / E6.2
NO SCALE

MECHANICAL / PLUMBING EQUIPMENT SCHEDULE

Mark	Voltage/Phase	Conduit/Wire	Fuse	Disc. Switch	Panel	Remarks
AC 1	208/3	1"C., (3) #6, (1) #10 GND.	45	60A/3P/3R	SEE PLANS	27 MCA (1)
AC 2	208/3	1"C., (3) #6, (1) #10 GND.	45	60A/3P/3R	SEE PLANS	27 MCA (1)
AC 3	208/3	1"C., (3) #6, (1) #10 GND.	45	60A/3P/3R	SEE PLANS	27 MCA (1)
AC 4	208/3	1"C., (3) #6, (1) #10 GND.	45	60A/3P/3R	SEE PLANS	27 MCA (1)
AC 5	208/3	1"C., (3) #6, (1) #10 GND.	45	60A/3P/3R	SEE PLANS	27 MCA (1)
AC 6	208/3	1"C., (3) #6, (1) #10 GND.	45	60A/3P/3R	SEE PLANS	27 MCA (1)
AC 7	208/3	3/4"C., (3) #10, (1) #10 GND.	30	30A/3P/3R	SEE PLANS	24 MCA (1)
AC 8	208/3	3/4"C., (3) #10, (1) #10 GND.	30	30A/3P/3R	SEE PLANS	24 MCA (1)
AC 9	208/3	1"C., (3) #6, (1) #10 GND.	45	60A/3P/3R	SEE PLANS	27 MCA (1)
AC 10	208/3	3/4"C., (3) #10, (1) #10 GND.	30	30A/3P/3R	SEE PLANS	24 MCA (1)
FC 1 / HP 1	208/1	3/4"C., (3) #10, (1) #10 GND.		(3)	SEE PLANS	18 MCA, 25 MOCP (2)
FC 2 / HP 2	208/1	3/4"C., (3) #10, (1) #10 GND.		(3)	SEE PLANS	18 MCA, 25 MOCP (2)
CU 1	208/1	3/4"C., (3) #10, (1) #10 GND.		(3)	SEE PLANS	12.1 MCA, 25A MOCP
FC 3	208/1	3/4"C., (3) # 10, (1) # 10 GND		(3)	SEE PLANS	1.4 MCA, 15A MOCP
EF 1	120/1	3/4"C., (2) #10, (1) #10 GND.		(3)	SEE PLANS	1/4 HP (5.8 FLA)
EF 2	120/1	3/4"C., (2) #10, (1) #10 GND.		(3)	SEE PLANS	1/4 HP (5.8 FLA) (3)
EF 3	120/1	3/4"C., (2) #10, (1) #10 GND.		(3)	SEE PLANS	1/4 HP (5.8 FLA)
EF 4	120/1	3/4"C., (2) #10, (1) #10 GND.		(3)	SEE PLANS	46w
E/H 2	208/3	3/4"C., (3) #8, (1) #10 GND.	35	60A/3P/1	SEE PLANS	9kw (25A)
E/H 2	120/1	3/4"C., (2) #8, (1) #10 GND.		(3)	SEE PLANS	3.5kw

(1) PROVIDE SEPARATE POWER CONNECTION TO 208v, 3 PHASE POWER EXHAUST (MCA = 3.9A, MOCP = 7.0). PROVIDE POWER EXHAUST DISCONNECT SEPARATE FROM THE UNIT DISCONNECT. PROVIDE MANUAL MOTOR STARTER SWITCH RATED FOR MOTOR SIZE AND VOLTAGE.

(2) INDOOR UNIT POWERED FROM OUTDOOR UNIT. PROVIDE 1"C.O. AND BACKBOX BETWEEN OUTDOOR UNIT AND FANCOIL.

(3) PROVIDE MANUAL MOTOR STARTER SWITCH RATED FOR MOTOR SIZE AND VOLTAGE.

(4) EXHAUST FAN ASSOCIATED WITH KILN HOOD. SEE MECHANICAL DRAWINGS FOR FURTHER INFO.

IDENTIFICATION STAMP
DIV. OF THE STATE ARCHITECT
APP. 04-118693 INC:
REVIEWED FOR
SS ☑ FLS ☑ ACS ☑
DATE: 03.13.2020

Revison	Date

Consultant

Engineer

studiowc
ARCHITECTURE + ENGINEERING
515 Encinitas Blvd, Ste 201, Encinitas, California 92024
Telephone: (760) 634-8880 Fax: (760) 452-7341

LICENSED ARCHITECT
ROBERT D. WEBB
C-28036
OCTOBER 31, 2021
STATE OF CALIFORNIA

CHET. HARRITT ELEM. SCHOOL
LRC & CLASSROOM ADDITION
SANTEE SCHOOL DISTRICT

MECHANICAL SCHEDULE

Drawn: Author
Checked: Checker
Date:
Job: SSD-CFH-05

E6.2

REGISTERED PROFESSIONAL ENGINEER
MYRON C. GOSSE-HARRIS
NO.E 14781
Exp. 6-30-2021
ELECTRICAL
STATE OF CALIFORNIA

JOHNSON
CONSULTING ENGINEERS, INC.
Power | Lighting | Multimedia
Communications | Data Networking
12875 Brookprinter Place, Suite 300
Poway, CA 92064
P 858.679.4030 | F 858.513.0559
www.jce-inc.com

#19033 2/13/2020 2:00:51 PM

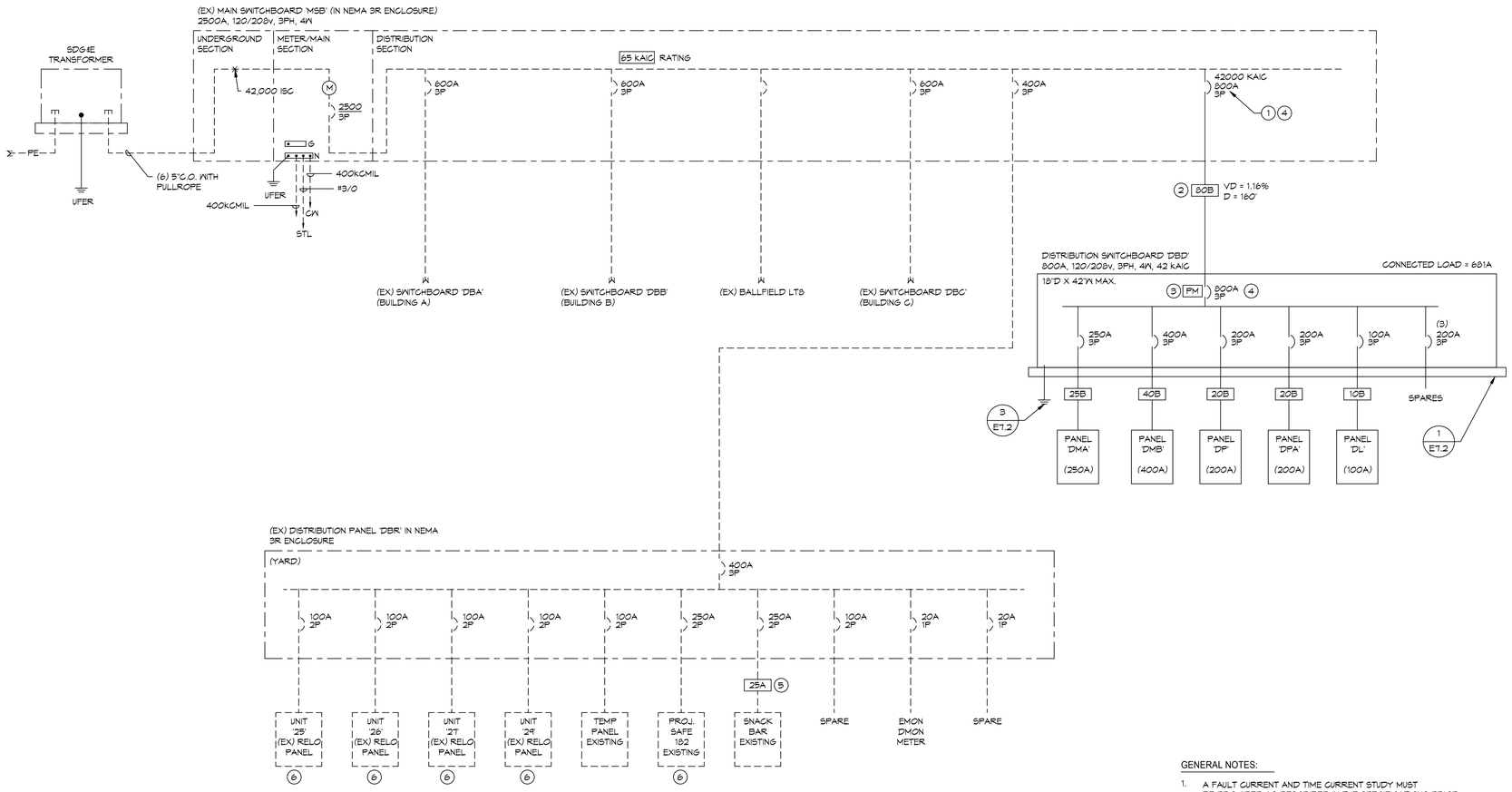

ONE-LINE DIAGRAM

NO SCALE

600Volt Feeder Schedule

I.D.	Type	Ampacity	Copper Conduit	Copper Conductors	Aluminum Conduit	Aluminum Conductors
2A		20	(1) 3/4"	3 # 12, 1# 12 Gnd	NA	NA
2B		20	(1) 3/4"	4 # 12, 1# 12 Gnd	NA	NA
3A		30	(1) 3/4"	3 # 10, 1# 10 Gnd	NA	NA
3B		30	(1) 3/4"	4 # 10, 1# 10 Gnd	NA	NA
4A		40	(1) 1"	3 # 8, 1# 10 Gnd	NA	NA
4B		40	(1) 1"	4 # 8, 1# 10 Gnd	NA	NA
5A		50	(1) 1"	3 # 6, 1# 10 Gnd	NA	NA
5B		50	(1) 1"	4 # 6, 1# 10 Gnd	NA	NA
6A		60	(1) 1 1/4"	3 # 4, 1# 8 Gnd	NA	NA
6B		60	(1) 1 1/4"	4 # 4, 1# 8 Gnd	NA	NA
7A		70	(1) 1 1/4"	3 # 4, 1# 8 Gnd	NA	NA
7B		70	(1) 1 1/4"	4 # 4, 1# 8 Gnd	NA	NA
8A		80	(1) 1 1/4"	3 # 3, 1# 8 Gnd	NA	NA
8B		80	(1) 1 1/4"	4 # 3, 1# 8 Gnd	NA	NA
9A		90	(1) 1 1/2"	3 # 2, 1# 8 Gnd	NA	NA
9B		90	(1) 1 1/2"	4 # 2, 1# 8 Gnd	NA	NA
10A		100	(1) 1 1/2"	3 # 1, 1# 6 Gnd	NA	NA
10B		100	(1) 1 1/2"	4 # 1, 1# 6 Gnd	NA	NA
12A		125	(1) 2"	3 # 1, 1# 6 Gnd	(1) 2"	3 # 2/0, 1# 3 Gnd
12B		125	(1) 2"	4 # 1, 1# 6 Gnd	(1) 2"	4 # 2/0, 1# 3 Gnd
15A		150	(1) 2"	3 # 1/0, 1# 6 Gnd	(1) 2"	3 # 3/0, 1# 3 Gnd
15B		150	(1) 2"	4 # 1/0, 1# 6 Gnd	(1) 2"	4 # 3/0, 1# 3 Gnd
17A		175	(1) 2"	3 # 2/0, 1# 6 Gnd	(1) 2"	3 # 4/0, 1# 3 Gnd
17B		175	(1) 2"	4 # 2/0, 1# 6 Gnd	(1) 2"	4 # 4/0, 1# 3 Gnd
20A		200	(1) 3"	3 # 3/0, 1# 4 Gnd	(1) 3"	3 # 250, 1# 2 Gnd
20B		200	(1) 3"	4 # 3/0, 1# 4 Gnd	(1) 3"	4 # 250, 1# 2 Gnd
22A		225	(1) 3"	3 # 4/0, 1# 4 Gnd	(1) 3"	3 # 300, 1# 2 Gnd
22B		225	(1) 3"	4 # 4/0, 1# 4 Gnd	(1) 3"	4 # 300, 1# 2 Gnd
25A		250	(1) 3"	3 # 250, 1# 4 Gnd	(1) 3"	3 # 350, 1# 2 Gnd
25B		250	(1) 3"	4 # 250, 1# 4 Gnd	(1) 3"	4 # 350, 1# 2 Gnd
30A		300	(1) 3"	3 # 350, 1# 4 Gnd	(1) 3"	3 # 500, 1# 2 Gnd
30B		300	(1) 3"	4 # 350, 1# 4 Gnd	(1) 3"	4 # 500, 1# 2 Gnd
35A		350	(2) 2"	3 # 2/0, 1# 2 Gnd	(2) 2"	3 # 4/0, 1# 1 Gnd
35B		350	(2) 2"	4 # 2/0, 1# 2 Gnd	(2) 2"	4 # 4/0, 1# 1 Gnd
40A		400	(2) 3"	3 # 3/0, 1# 2 Gnd	(2) 3"	3 # 250, 1# 1/0 Gnd
40B		400	(2) 3"	4 # 3/0, 1# 2 Gnd	(2) 3"	4 # 250, 1# 1/0 Gnd
45A		450	(2) 3"	3 # 4/0, 1# 2 Gnd	(2) 3"	3 # 300, 1# 1/0 Gnd
45B		450	(2) 3"	4 # 4/0, 1# 2 Gnd	(2) 3"	4 # 300, 1# 1/0 Gnd
50A		500	(2) 3"	3 # 250, 1# 2 Gnd	(2) 3"	3 # 350, 1# 1/0 Gnd
50B		500	(2) 3"	4 # 250, 1# 2 Gnd	(2) 3"	4 # 350, 1# 1/0 Gnd
60A		600	(2) 3"	3 # 350, 1# 1 Gnd	(2) 3"	3 # 500, 1# 2/0 Gnd
60B		600	(2) 3"	4 # 350, 1# 1 Gnd	(2) 3"	4 # 500, 1# 2/0 Gnd
70A		700	(3) 3"	3 # 4/0, 1# 1/0 Gnd	(3) 3"	3 # 300, 1# 3/0 Gnd
70B		700	(3) 3"	4 # 4/0, 1# 1/0 Gnd	(3) 3"	4 # 300, 1# 3/0 Gnd
80A		800	(3) 3"	3 # 300, 1# 1/0 Gnd	(3) 3"	3 # 500, 1# 3/0 Gnd
80B		800	(3) 3"	4 # 300, 1# 1/0 Gnd	(3) 3"	4 # 500, 1# 3/0 Gnd
100B		1000	(4) 3"	4 # 250, 1# 2/0 Gnd	(4) 3"	4 # 400, 1# 4/0 Gnd
120B		1200	(4) 4"	4 # 350, 1# 3/0 Gnd	(4) 4"	4 # 500, 1# 250 Gnd
160B		1600	(5) 4"	4 # 400, 1# 4/0 Gnd	(5) 4"	4 # 600, 1# 350 Gnd
200B		2000	(6) 4"	4 # 500, 1# 250 Gnd	(6) 4"	4 # 600, 1# 400 Gnd
250B		2500	(7) 4"	4 # 500, 1# 350 Gnd	(7) 4"	4 # 750, 1# 600 Gnd
300B		3000	(8) 4"	4 # 500, 1# 350 Gnd	(8) 4"	4 # 750, 1# 600 Gnd
350B		3500	(12) 4"	4 # 350, 1# 400 Gnd	(12) 4"	4 # 500, 1# 600 Gnd
400B		4000	(12) 4"	4 # 400, 1# 400 Gnd	(12) 4"	4 # 600, 1# 750 Gnd

GENERAL NOTES:

1. A FAULT CURRENT AND TIME CURRENT STUDY MUST BE PROVIDED AS DESCRIBED IN THE SPECIFICATIONS PRIOR TO FINAL APPROVAL OF THE POWER EQUIPMENT.
2. REFERENCE PANEL SCHEDULES FOR FAULT CURRENT RATINGS.
3. UNLESS WHERE OTHERWISE NOTED, ALL WORK INDICATED ON THESE DRAWINGS SHALL BE CONSIDERED NEW WORK.
4. ALL ELECTRICAL GEAR AND EQUIPMENT SHOWN ON ONE-LINE DIAGRAM SHALL BE NEMA 3R UNLESS OTHERWISE NOTED.

KEY NOTES:

1. NEW CIRCUIT BREAKER IN EXISTING SPACE TO MATCH EXISTING MANUFACTURER AND RATING.
2. UTILIZE ALUMINUM CONDUCTORS FOR THIS FEEDER.
3. CUSTOMER DEMAND METER. SCHNEIDER POWER LOGIC ION6200 OR EQUAL.
4. 100% RATED BREAKER
5. NEW FEEDER TO EXISTING PANEL
6. RELO PANEL AND FEEDER RO BE DEMO AND REMOVED.

LOAD CALCULATION		
PEAK DEMAND	=	517 KW
X 1.25	=	646 KW
TOTAL LOAD (120/208v)	=	1796 A
NEW ADDED LOAD	=	681 A
	=	2477 A
EXISTING MSB 2500 AMPS, 120/208v		

600V FEEDER SCHEDULE LEGEND

- MS — REFERENCE MECHANICAL EQUIPMENT SCHEDULE FOR SIZE
- T75 — "T" INDICATES TYPICAL TRANSFORMER FEEDER REFERENCE. THE NUMBER INDICATES TRANSFORMER TYPE. REFER TO SCHEDULE ON SHEET FOR SIZE REQUIRED.
- 2 | CO — INDICATES QUANTITY OF CONDUITS REQUIRED = (2)
- 4 — INDICATES SIZE OF CONDUITS REQUIRED = 4"
- CO — INDICATES "CONDUIT ONLY"

600V FEEDER SCHEDULE GENERAL NOTES:

1. ALL CONDUCTOR SHALL BE PROVIDED WITH TYPE THWN-2 INSULATION. REFERENCE SPECIFICATION SECTION 26 05 19 (16120) FOR ADDITIONAL REQUIREMENTS.
2. PROVIDE 60 DEGREE COPPER/ALUMINUM RATED TERMINATION FOR ALL FEEDERS SIZED WITH #2 OR SMALLER CONDUCTORS. PROVIDE 75 DEGREE COPPER/ALUMINUM RATED TERMINATIONS FOR ALL FEEDERS SIZED WITH #1 OR LARGER CONDUCTORS.
3. CONTRACTOR SHALL BE RESPONSIBLE FOR ORDERING LUG CONFIGURATION AN ALL EQUIPMENT, BREAKER OF DISCONNECTS TO MATCH FEEDER CONFIGURATIONS INDICATED.
4. WHERE MULTIPLE CONDUIT QUANTITIES ARE INDICATED, CONDUCTOR QUANTITIES AND SIZES SHOWN IN SCHEDULE SHALL BE PROVIDED IN EACH CONDUIT.

JOHNSON CONSULTING ENGINEERS, INC.
Power | Lighting | Multimedia
Communications | Data Networking
12875 Brookprinter Place, Suite 300
Poway, CA 92064
P 858.679.4030 | F 858.513.0559
www.jce-inc.com
REGISTERED PROFESSIONAL ENGINEER — MICHAEL CRESSE-HAMILTON — NO.E 14781 Exp. 6-30-2021 — ELECTRICAL — STATE OF CALIFORNIA

#19033 2/13/2020 2:00:54 PM

IDENTIFICATION STAMP
DIV. OF THE STATE ARCHITECT
APP. 04-118693 INC:
REVIEWED FOR
SS ☑ FLS ☑ ACS ☑
DATE: 03.13.2020

Revison	Date

Consultant

Engineer

studiowc
ARCHITECTURE + ENGINEERING
515 Encinitas Blvd, Ste 201, Encinitas, California 92024
Telephone: (760) 634-8800 Fax: (760) 452-7541

LICENSED ARCHITECT — ROBERT D. WEBB — C-28036 — OCTOBER 31, 2021 — STATE OF CALIFORNIA

CHET. HARRITT ELEM. SCHOOL
LRC & CLASSROOM ADDITION
SANTEE SCHOOL DISTRICT

ONE-LINE DIAGRAM

Drawn: Author
Checked: Checker
Date:
Job: SSD-CFH-05

E7.1

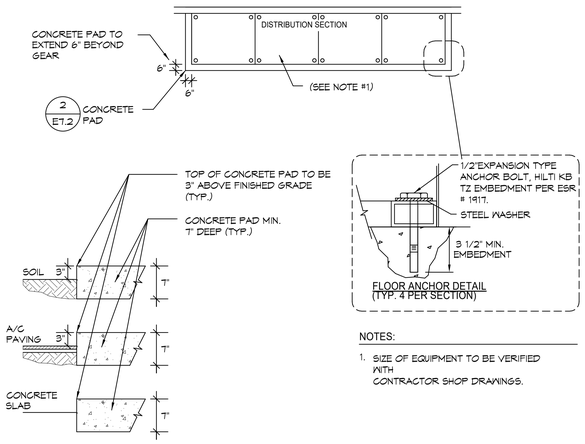

NOTES:

1. SIZE OF EQUIPMENT TO BE VERIFIED WITH CONTRACTOR SHOP DRAWINGS.

TYPICAL ELECTRICAL EQUIPMENT PAD DETAIL (1 / E7.2)
NO SCALE

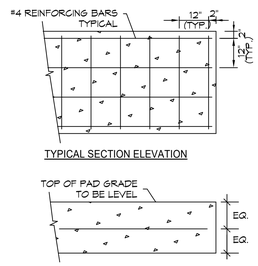

GENERAL NOTES

1. ALL CONCRETE SHALL ATTAIN A MINIMUM COMPRESSIVE STRENGTH OF 3000 PSI AT 28 DAYS. AS PER 1905A METHOD 'A' AND TABLE 19A-A-8. BATCH PLANT INSPECTIONS AND TESTS OF CEMENT AND REINFORCING BARS MAY BE WAIVED PER TITLE 24 SECTION 1704A.4.3 & 1704A.4.4.
2. CONCRETE MIX DESIGNS SHALL COMPLY WITH TITLE 24 SECTION 1905A.2.
3. PORTLAND CEMENT SHALL CONFORM TO (ASTM C-150) TYPE I OR II
4. CONCRETE AGGREGATES SHALL CONFORM TO ASTM C-33
5. CONCRETE PLACEMENT SHALL CONFORM TO TITLE 24 SECTION 1905A.7.
6. ALL REINFORCING BARS SHALL CONFORM TO TITLE 24 SECTION 1903A AND ASTM A-615 GRADE 60.

TYPICAL HOUSEKEEPING PAD DETAIL (2 / E7.2)
NO SCALE

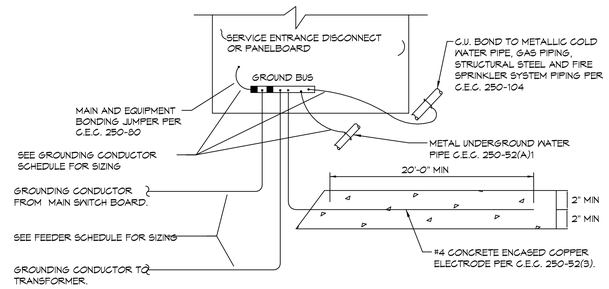

GROUND SIZING SCHEDULE	
EQUIPMENT AMPACITY	GROUNDING CONDUCTOR SIZE
0 - 200 AMPS	#4 CU.
201 - 400 AMPS	#1/0 CU.
401 - 800 AMPS	#2/0 CU.
801 - 1200 AMPS	#3/0 CU.
1201 - 2000 AMPS	#250 CU.
2001 - 4000 AMPS	#350 CU.

SERVICE ENTRANCE GROUNDING AND BONDING DETAIL (3 / E7.2)
NO SCALE

JOHNSON CONSULTING ENGINEERS, INC.
Power | Lighting | Multimedia
Communications | Data Networking
12875 Brookprinter Place, Suite 300
Poway, CA 92064
P 858.679.4030 | F 858.513.0559
www.jce-inc.com

REGISTERED PROFESSIONAL ENGINEER
NO.E 14781
Exp. 6-30-2021
ELECTRICAL
STATE OF CALIFORNIA

#19033 2/13/2020 2:01:00 PM

IDENTIFICATION STAMP
DIV. OF THE STATE ARCHITECT
APP. 04-118693 INC:
REVIEWED FOR
SS ☑ FLS ☑ ACS ☑
DATE: 03.13.2020

Revison | Date

Consultant

Engineer

studiowc
ARCHITECTURE + ENGINEERING
515 Encinitas Blvd, Ste. 201, Encinitas, California 92024
Telephone: (760)753-6800 Fax: (760)452-7541

LICENSED ARCHITECT
ROBERT D. WEBB, A.I.A.
C-28036
OCTOBER 31, 2021
STATE OF CALIFORNIA

CHET. HARRITT ELEM. SCHOOL
LRC & CLASSROOM ADDITION
SANTEE SCHOOL DISTRICT

ONE-LINE DETAILS

Drawn: Author
Checked: Checker
Date:
Job: SSD-CFH-05

E7.2

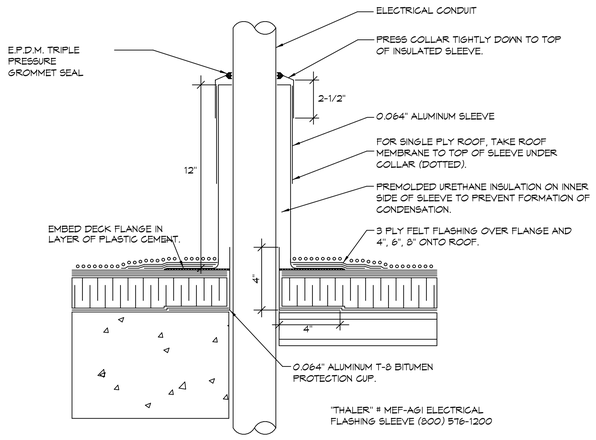

CONDUIT ROOF PENETRATION DETAIL
NO SCALE
1 / E8.1

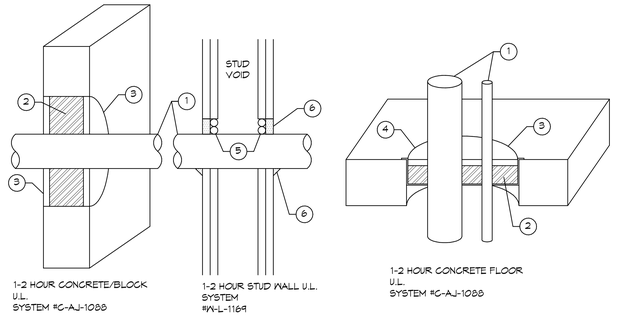

KEY NOTES:

1. MAXIMUM 4" EMT CONDUIT.
2. COMPRESSED MINERAL WOOL MIN. 2" THICK (RECESSED TO ALLOW FOR SEALANT).
3. APPLY #FS900 MIN. 1" DEEP AND FLUSH WITH FINISHED SURFACE.
4. 'U' SHAPED STEEL WIRE FOR SUPPORT.
5. BACKER ROD COMPRESSED INTO ANNULUS (LEAVE ROOM FOR SEALANT)
6. APPLY #FS1900 INTO ANNULAR SPACE MIN. 5/8" DEEP. ADD 3/8" BEAD AT POINT OF CONTACT.

GENERAL NOTES:

1. ALL CONDUIT PENETRATION THRU FIRE RATED PARTITIONS SHALL COMPLY WITH THESE DETAILS. SEE ARCHITECTURAL PLANS FOR LOCATION OF ALL RATED PARTITIONS.
2. FOR FIRE STOPPING MATERIALS CONTACT W.R. GRACE (800) 334-8796.

CONDUIT PENETRATION THRU FIRE RATED PARTITIONS
NO SCALE
2 / E8.1

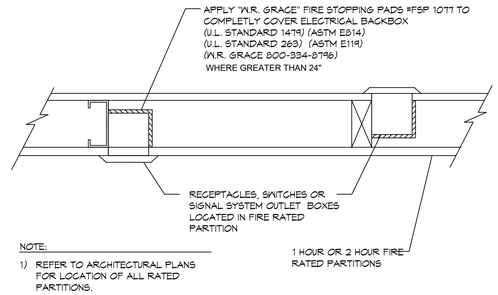

NOTE:

1) REFER TO ARCHITECTURAL PLANS FOR LOCATION OF ALL RATED PARTITIONS.

OUTLET BOX IN FIRE RATED PARTITION
NO SCALE
3 / E8.1

IDENTIFICATION STAMP
DIV. OF THE STATE ARCHITECT
APP. 04-118693 INC:
REVIEWED FOR
SS ☑ FLS ☑ ACS ☑
DATE: 03.13.2020

Revison	Date

Consultant

Engineer

studiowc
ARCHITECTURE + ENGINEERING
515 Encinitas Blvd, Ste. 201, Encinitas, California 92024
Telephone: (760)753-6800 Fax: (760)452-7541

LICENSED ARCHITECT
ROBERT D. WEBB AJA
C-28036
OCTOBER 31, 2021
STATE OF CALIFORNIA

CHET. HARRITT ELEM. SCHOOL
LRC & CLASSROOM ADDITION
SANTEE SCHOOL DISTRICT

ELECTRICAL DETAILS

Drawn: Author
Checked: Checker
Date:
Job: SSD-CFH-05

E8.1

REGISTERED PROFESSIONAL ENGINEER
DOMINIC A. GOESE-HANSEN
NO.E 14781
Exp. 6-30-2021
ELECTRICAL
STATE OF CALIFORNIA
JOHNSON
CONSULTING ENGINEERS, INC.
Power | Lighting | Multimedia
Communications | Data Networking
12875 Brookprinter Place, Suite 300
Poway, CA 92064
P 858.679.4030 | F 858.513.0559
www.jce-inc.com

#19033 2/13/2020 2:01:01 PM

PANEL SCHEDULES

Panel DMA

120/208	120/208 3PH, 4WIRE	250 AMP	Main: Breaker X
	200% Neutral Bus		Lug
	(INTEGRAL)TVSS Protection		Enclosure: Recessed
DMA	(REMOTE)TVSS Protection		Surface X
	Service Entrance Rated	GENERAL DISTRIBUTION	PROVIDE LOCK ON BREAKER DEVICES FOR ALL EMERGENCY LIGHTING,
	Load Side Feed thru Lugs	BREAKER REQUIREMENTS :	MOTORS, AND FIRE ALARM EQUIPMENT SERVED FROM THIS PANEL

ENCLOSURE TYPE: X NEMA TYPE 1 / NEMA TYPE 3R / NEMA TYPE 4X — ENCLOSURE NOTE: 22 KAIC

LCL	NHL	CIRCUIT DESCRIPTION	AMP	POLE	NO	PHASE A	PHASE B	PHASE C	NO	AMP	POLE	CIRCUIT DESCRIPTION	LCL	NHL
		AC-1	50	3	1	3710 / 3710			2	50	3	AC-3		
		"	-	-	3		3710 / 3710		4	-	-	"		
		"	-	-	5			3710 / 3710	6	-	-	"		
		AC-2	50	3	7	3710 / 3000			8	40	3	EWH-1	X	
		"	-	-	9		3710 / 3000		10	-	-	"	X	
		"	-	-	11			3710 / 3000	12	-	-	"	X	
		CP-1	20	1	13	41 / 3500			14	20	1	EWH-2	X	
		SPARE	20	1	15		700		16	40	1	EF-2		
		SPARE	20	1	17			700	18	20	1	EF-1		
		SPARE	20	1	19	50			20	20	1	EF-4		
		ROOF RECEPTS.	20	1	21		600		22	20	1	SPARE		
		SPARE	20	1	23				24	20	1	SPARE		
		HP-1/FC-1	30	2	25	1875			26	20	1	SPARE		
		"	-	-	27		1875		28	20	1	SPARE		
		SPARE	20	1	29				30	20	1	SPARE		
		SPARE	20	1	31				32	20	1	SPARE		
		SPARE	20	1	33				34	20	1	SPARE		
		SPARE	20	1	35				36	20	1	SPARE		
		SPARE	20	1	37				38	20	1	SPACE		
		SPARE	20	1	39				40	20	1	SPACE		
		SPARE	20	1	41				42	20	1	SPACE		

SPECIAL PANEL NOTE — NOTE #1 — NOTE #2

	PHASE A	PHASE B	PHASE C		
NHL= Non Harmonic Load — TOTAL LOAD PER PHASE	19596	17305	14830		
LCL= Long Continuous Load — 25% LONG CONTINUOUS LOADS	1625	750	750	HIGH PHASE 21221 / 0.9pf = VA @ 120V	196.5 AMPS
SUB PANEL				ALL PHASES 54856 / 0.9pf = VA @ 208V/3PH	169.3 AMPS
SUB PANEL				DEMAND PER	
Max. Neut. Load 278 AMPS — TOTAL CONNECTED LOAD	21221	18055	15580	NEC 220-34	AMPS

M:\Panel Schedule\2019\19033 Chet Harritt\DMA 11:01 AM2/13/2020

Panel DMB

120/208	120/208 3PH, 4WIRE	400 AMP	Main: Breaker X
	200% Neutral Bus		Lug
	(INTEGRAL)TVSS Protection		Enclosure: Recessed
DMB	(REMOTE)TVSS Protection		Surface X
	Service Entrance Rated	GENERAL DISTRIBUTION	PROVIDE LOCK ON BREAKER DEVICES FOR ALL EMERGENCY LIGHTING,
	Load Side Feed thru Lugs	BREAKER REQUIREMENTS :	MOTORS, AND FIRE ALARM EQUIPMENT SERVED FROM THIS PANEL

ENCLOSURE TYPE: X NEMA TYPE 1 / NEMA TYPE 3R / NEMA TYPE 4X — ENCLOSURE NOTE: 42 KAIC

LCL	NHL	CIRCUIT DESCRIPTION	AMP	POLE	NO	PHASE A	PHASE B	PHASE C	NO	AMP	POLE	CIRCUIT DESCRIPTION	LCL	NHL
		AC-4	50	3	1	3710 / 3710			2	50	3	AC-5		
		"	-	-	3		3710 / 3710		4	-	-	"		
		"	-	-	5			3710 / 3710	6	-	-	"		
		AC-7	30	3	7	3350 / 3710			8	50	3	AC-6		
		"	-	-	9		3350 / 3710		10	-	-	"		
		"	-	-	11			3350 / 3710	12	-	-	"		
		AC-8	30	3	13	3350 / 3710			14	50	3	AC-9		
		"	-	-	15		3350 / 3710		16	-	-	"		
		"	-	-	17			3350 / 3710	18	-	-	"		
		AC-10	30	3	19	3350			20	50	3	SPARE		
		"	-	-	21		3350		22	-	-	"		
		"	-	-	23			3350	24	-	-	"		
		HP-1/FC-2	30	2	25	1875			26	20	1	SPARE		
		"	-	-	27		1875		28	20	1	SPARE		
		CU-1	30	2	29			1260	30	20	1	SPARE		
		"	-	-	31	1260			32	20	1	SPARE		
		FC-3	20	2	33		150		34	20	1	SPARE		
		"	-	-	35			150	36	20	1	SPARE		
		EF-3	20	1	37	700			38	20	1	SPACE		
		ROOF RECEPTS.	20	1	39		1000		40	20	1	SPACE		
		SPARE	20	1	41				42	20	1	SPACE		

SPECIAL PANEL NOTE — NOTE #1 — NOTE #2

	PHASE A	PHASE B	PHASE C		
NHL= Non Harmonic Load — TOTAL LOAD PER PHASE	28725	27915	26300		
LCL= Long Continuous Load — 25% LONG CONTINUOUS LOADS	0	0	0	HIGH PHASE 28725 / 0.9pf = VA @ 120V	266.0 AMPS
SUB PANEL				ALL PHASES 82940 / 0.9pf = VA @ 208V/3PH	256.0 AMPS
SUB PANEL				DEMAND PER	
Max. Neut. Load 407 AMPS — TOTAL CONNECTED LOAD	28725	27915	26300	NEC 220-34	AMPS

M:\Panel Schedule\2019\19033 Chet Harritt\DMB 11:02 AM2/13/2020

Panel DL

120/208	120/208 3PH, 4WIRE	100 AMP	Main: Breaker X
	200% Neutral Bus		Lug
	(INTEGRAL)TVSS Protection		Enclosure: Recessed
DL	(REMOTE)TVSS Protection		Surface X
	Service Entrance Rated	GENERAL DISTRIBUTION	PROVIDE LOCK ON BREAKER DEVICES FOR ALL EMERGENCY LIGHTING,
	Load Side Feed thru Lugs	BREAKER REQUIREMENTS :	MOTORS, AND FIRE ALARM EQUIPMENT SERVED FROM THIS PANEL

ENCLOSURE TYPE: X NEMA TYPE 1 / NEMA TYPE 3R / NEMA TYPE 4X — ENCLOSURE NOTE: 22 KAIC

LCL	NHL	CIRCUIT DESCRIPTION	AMP	POLE	NO	PHASE A	PHASE B	PHASE C	NO	AMP	POLE	CIRCUIT DESCRIPTION	LCL	NHL
X		INTERIOR LTG	20	1	1	960 / 925			2	20	1	INTERIOR LTG	X	
		SOLATUBE PWR. SUPPLY	20	1	3		500 / 250		4	20	1	SOLATUBE PWR. SUPPLY		
X		INTERIOR LTG	20	1	5			1035 / 755	6	20	1	INTERIOR LTG	X	
		SOLATUBE PWR. SUPPLY	20	1	7	250 / 250			8	20	1	SOLATUBE PWR. SUPPLY		
X		INTERIOR LTG	20	1	9		1518 / 600		10	20	1	INTERIOR LTG	X	
X		INTERIOR LTG	20	1	11			813 / 250	12	20	1	SOLATUBE PWR. SUPPLY		
		SOLATUBE PWR. SUPPLY	20	1	13	150 / 440			14	20	1	EXTERIOR LTG	X	
X		INTERIOR LTG	20	1	15		970 / 300		16	20	1	EXTERIOR LTG	X	
		SOLATUBE PWR. SUPPLY	20	1	17			600 / 536	18	20	1	EXTERIOR LTG	X	
X		CORRIDOR LTG	20	1	19	207 / 500			20	20	1	PHOTOCELL		
X		CORRIDOR LTG	20	1	21		345		22	20	1	SPARE		
		SPARE	20	1	23				24	20	1	SPARE		
		SPARE	20	1	25				26	20	1	SPARE		
		SPARE	20	1	27				28	20	1	SPARE		
		SPARE	20	1	29				30	20	1	SPARE		
		SPARE	20	1	31				32	20	1	SPARE		
		SPARE	20	1	33				34	20	1	SPARE		
		SPARE	20	1	35				36	20	1	SPARE		
		SPACE	20	1	37				38	20	1	SPACE		
		SPACE	20	1	39				40	20	1	SPACE		
		SPACE	20	1	41				42	20	1	SPACE		

SPECIAL PANEL NOTE — NOTE #1 — NOTE #2

	PHASE A	PHASE B	PHASE C		
NHL= Non Harmonic Load — TOTAL LOAD PER PHASE	3682	4483	3989		
LCL= Long Continuous Load — 25% LONG CONTINUOUS LOADS	633	933	785	HIGH PHASE 5416.25 / 0.9pf = VA @ 120V	50.2 AMPS
SUB PANEL				ALL PHASES 14505 / 0.9pf = VA @ 208V/3PH	44.8 AMPS
SUB PANEL				DEMAND PER	
Max. Neut. Load 64 AMPS — TOTAL CONNECTED LOAD	4315	5416.25	4774	NEC 220-34	AMPS

M:\Panel Schedule\2019\19033 Chet Harritt\DL 10:18 AM2/3/2020

Panel DP

120/208	120/208 3PH, 4WIRE	200 AMP	Main: Breaker X
	200% Neutral Bus		Lug
	(INTEGRAL)TVSS Protection X		Enclosure: Recessed
DP	(REMOTE)TVSS Protection		Surface X
	Service Entrance Rated	GENERAL DISTRIBUTION	PROVIDE LOCK ON BREAKER DEVICES FOR ALL EMERGENCY LIGHTING,
	Load Side Feed thru Lugs	BREAKER REQUIREMENTS :	MOTORS, AND FIRE ALARM EQUIPMENT SERVED FROM THIS PANEL

ENCLOSURE TYPE: X NEMA TYPE 1 / NEMA TYPE 3R / NEMA TYPE 4X — ENCLOSURE NOTE: 22 KAIC

LCL	NHL	CIRCUIT DESCRIPTION	AMP	POLE	NO	PHASE A	PHASE B	PHASE C	NO	AMP	POLE	CIRCUIT DESCRIPTION	LCL	NHL
		RECEPT. 1	20	1	1	800 / 800			2	20	1	RECEPT. 11, 12		
		RECEPT. 1	20	1	3		600 / 800		4	20	1	RECEPT. 11, 12		
		RECEPT 1 - AV	20	1	5			1000 / 400	6	20	1	RECEPT. 11, 12		
		HANDRYER-15	20	1	7	1200 / 800			8	20	1	RECEPT - 19		
		HANDRYER-14	20	1	9		1200 / 1000		10	20	1	RECEPT - AV -8		
		RECEPT - 7	20	1	11			600 / 800	12	20	1	RECEPT. - 8,9		
		RECEPT - 7	20	1	13	600 / 800			14	20	1	RECEPT. 8, 9		
		RECEPT - 7	20	1	15		400 / 600		16	20	1	RECEPT. 8,9		
		RECEPT AV -7	20	1	17			1000 / 600	18	20	1	RECEPT. 8,9		
		CORD REEL - 7	20	1	19	1000 / 800			20	20	1	RECEPT. 6		
		CORD REEL - 7	20	1	21		1000 / 600		22	20	1	RECEPT. 6		
		CORD REEL - 7	20	1	23			1000 / 1000	24	20	1	RECEPT. 6 -AV		
		CORD REEL - 7	20	1	25	1000 / 800			26	20	1	RECEPT. 5		
		CORD REEL - 7	20	1	27		1000 / 600		28	20	1	RECEPT. 5		
		CORD REEL - 7	20	1	29			100 / 1000	30	20	1	RECEPT. 5 -AV		
		SPARE	20	1	31	800			32	20	1	RECEPT. 4		
		SPARE	20	1	33		600		34	20	1	RECEPT. 4		
		SPARE	20	1	35			1000	36	20	1	RECEPT. 4 -AV		
		SPARE	20	1	37	500			38	20	1	FIRE RISER		
		SPARE	20	1	39		1200		40	20	1	EXTERIOR RECEPT.		
		SPARE	20	1	41			3000	42	30	1	IDF UPS		
		SPARE	20	1	43	1500			44	20	1	IDF RECEPT.		
		SPARE	20	1	45		1500		46	20	1	IDF RECEPT.		
		SPARE	20	1	47			1500	48	20	1	IDF RECEPT.		
		SPARE	20	1	49	400			50	20	1	DOOR PWR SUPPLIES		
		SPARE	20	1	51		400		52	20	1	IDF CONV. RECEPT		
		SPARE	20	1	53			500	54	20	1	FACP		

SPECIAL PANEL NOTE — NOTE #1 — NOTE #2

	PHASE A	PHASE B	PHASE C		
NHL= Non Harmonic Load — TOTAL LOAD PER PHASE	11800	11500	13500		
LCL= Long Continuous Load — 25% LONG CONTINUOUS LOADS	0	0	0	HIGH PHASE 13500 / 0.9pf = KVA @ 120V	125.0 AMPS
SUB PANEL				ALL PHASES 36800 / 0.9pf = KVA @ 208V/3PH	113.6 AMPS
SUB PANEL				DEMAND PER	
Max. Neut. Load 191 AMPS — TOTAL CONNECTED LOAD	11800	11500	13500	NEC 220-34 0 sq. ft.	AMPS

M:\Panel Schedule\2019\19033 Chet Harritt\DP-54 10:19 AM2/3/2020

Panel DPA

120/208	120/208 3PH, 4WIRE	200 AMP	Main: Breaker X
	200% Neutral Bus		Lug
	(INTEGRAL)TVSS Protection x		Enclosure: Recessed
DPA	(REMOTE)TVSS Protection		Surface X
	Service Entrance Rated	GENERAL DISTRIBUTION	PROVIDE LOCK ON BREAKER DEVICES FOR ALL EMERGENCY LIGHTING,
	Load Side Feed thru Lugs	BREAKER REQUIREMENTS :	MOTORS, AND FIRE ALARM EQUIPMENT SERVED FROM THIS PANEL

ENCLOSURE TYPE: X NEMA TYPE 1 / NEMA TYPE 3R / NEMA TYPE 4X — ENCLOSURE NOTE: 22 KAIC

LCL	NHL	CIRCUIT DESCRIPTION	AMP	POLE	NO	PHASE A	PHASE B	PHASE C	NO	AMP	POLE	CIRCUIT DESCRIPTION	LCL	NHL
		CORD REEL - 2	20	1	1	1000 / 1000			2	20	1	CORD REEL - 3		
		CORD REEL - 2	20	1	3		1000 / 1000		4	20	1	CORD REEL - 3		
		CORD REEL - 2	20	1	5			1000 / 1000	6	20	1	CORD REEL - 3		
		CORD REEL - 2	20	1	7	1000 / 1000			8	20	1	CORD REEL - 3		
		CORD REEL - 2	20	1	9		1000 / 1000		10	20	1	CORD REEL - 3		
		CORD REEL - 2	20	1	11			1000 / 1000	12	20	1	CORD REEL - 3		
		RECEPT - 2	20	1	13	600 / 600			14	20	1	RECEPT - 3		
		RECEPT - 2	20	1	15		600 / 800		16	20	1	RECEPT - 3		
		RECEPT - 2	20	1	17			600 / 600	18	20	1	RECEPT - 3		
		RECEPT AV- 2	20	1	19	1000 / 1000			20	20	1	RECEPT AV -3		
		REFRIGERATOR	20	1	21		1500		22	20	1	SPARE		
		DISHWASHER	20	1	23			1000 / 2600	24	30	2	KILN - CRESS EX23P		
		RECEPT - 17	20	1	25	400 / 2600			26	-	-	"		
		RECEPT - 17	20	1	27		400 / 3200		28	50	2	KILN - SKUTT KS-818		
		EXTERIOR RECEPT	20	1	29			600 / 3200	30	-	-	"		
		SPARE	20	1	31				32	20	1	SPARE		
		SPARE	20	1	33				34	20	1	SPARE		
		SPARE	20	1	35				36	20	1	SPARE		
		SPARE	20	1	37				38	20	1	SPARE		
		SPARE	20	1	39				40	20	1	SPARE		
		SPARE	20	1	41				42	20	1	SPARE		

SPECIAL PANEL NOTE — NOTE #1 — NOTE #2

	PHASE A	PHASE B	PHASE C		
NHL= Non Harmonic Load — TOTAL LOAD PER PHASE	10200	10500	12600		
LCL= Long Continuous Load — 25% LONG CONTINUOUS LOADS	0	0	0	HIGH PHASE 12600 / 0.9pf = VA @ 120V	116.7 AMPS
SUB PANEL				ALL PHASES 33300 / 0.9pf = VA @ 208V/3PH	102.8 AMPS
SUB PANEL				DEMAND PER	
Max. Neut. Load 179 AMPS — TOTAL CONNECTED LOAD	10200	10500	12600	NEC 220-34	AMPS

M:\Panel Schedule\2019\19033 Chet Harritt\DPA 10:20 AM2/3/2020

Surface Wall Mounted Electrical Panel Detail

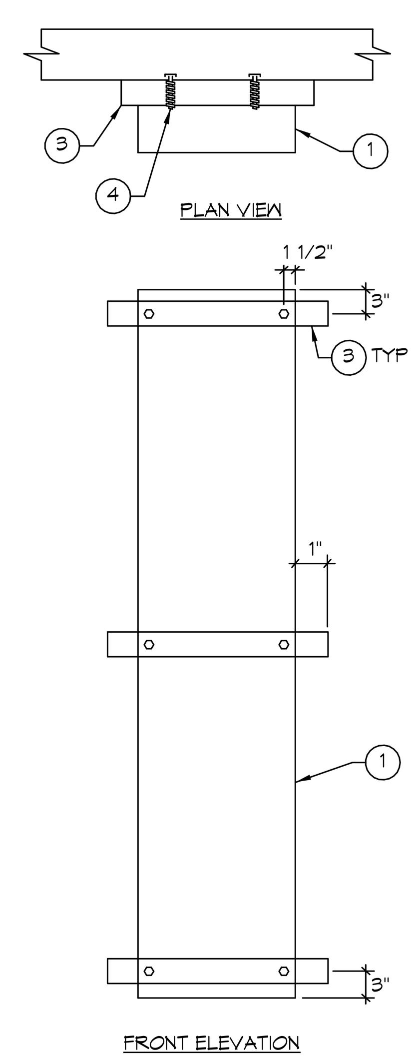

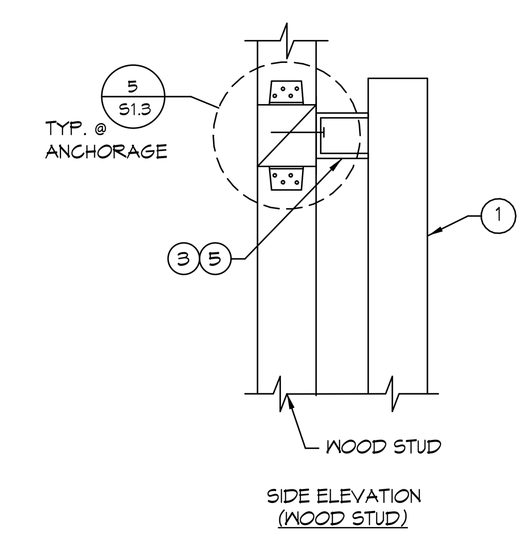

DETAIL NOTES

1. ELECTRICAL PANEL WALL MOUNTED 90" H. X 20" W. X 6" D. MAXIMUM. 150 LBS MAXIMUM WEIGHT.
2. NOT USED.
3. UNISTRUT P1000 C-CHANNEL.
4. NOT USED.
5. (2) #12 SMS. @ C.L EACH STUD.

SURFACE WALL MOUNTED ELECTRICAL PANEL DETAIL — 1 / E9.1
NO SCALE

DMA	DMB	DL
DP	DPA	

IDENTIFICATION STAMP
DIV. OF THE STATE ARCHITECT
APP. 04-118693 INC:
REVIEWED FOR
SS ☑ FLS ☑ ACS ☑
DATE: 03.13.2020

Date | Revison | Consultant | Engineer

studioWC
ARCHITECTURE + ENGINEERING
515 Encinitas Blvd. Ste. 201, Encinitas, California 92024
Telephone: (760)753-6800 Fax: (760)452-7541

LICENSED ARCHITECT ROBERT D. WEBB A.I.A. C-28036 OCTOBER 31, 2021 STATE OF CALIFORNIA

CHET. HARRITT ELEM. SCHOOL
LRC & CLASSROOM ADDITION
SANTEE SCHOOL DISTRICT

PANEL SCHEDULES

REGISTERED PROFESSIONAL ENGINEER MONICA GOESE-HANSEN NO.E 14781 Exp. 6-30-2021 ELECTRICAL STATE OF CALIFORNIA

JOHNSON
CONSULTING ENGINEERS, INC.
Power | Lighting | Multimedia
Communications | Data Networking
12875 Brookprinter Place, Suite 300
Poway, CA 92064
P 858.679.4030 | F 858.513.0559
www.jce-inc.com

#19033 2/13/2020 2:01:01 PM

Drawn: Author
Checked: Checker
Date:
Job: SSD-CFH-05

E9.1

DEMOLITION GENERAL NOTES:

1. ALL ITEMS SHOWN ON THIS DRAWING ARE EXISTING TO BE REMOVED UNLESS OTHERWISE NOTED. SEE REQUIREMENTS BELOW FOR SCOPE OF WORK. ALL OTHER ELECTRICAL ITEMS IN THIS BUILDING ARE EXISTING TO REMAIN, MAINTAIN POWER CIRCUIT CONTINUITY UNTIL NEW SOURCE IS ENERGIZED AND READY FOR TRANSFER. REFER TO POWER AND LIGHTING PLANS.
2. ALL ELECTRICAL DEMOLITION WORK SHALL BE DIRECTED BY THE ELECTRICAL CONTRACTOR.
3. COMPLY WITH CFC CHAPTER 33 - FIRE SAFETY DURING CONSTRUCTION AND DEMOLITION.

GENERAL DEMOLITION REQUIREMENTS:

1. LIGHTING FIXTURES
   WHERE EXISTING LIGHTING FIXTURES ARE TO BE REMOVED, AND ARE NOT RELOCATED, CONTRACTOR SHALL DISPOSE OF ALL FIXTURES INCLUDING LAMPS AND BALLAST.
2. WIRING DEVICES
   WHERE EXISTING SWITCHES OR RECEPTACLES ARE TO BE REMOVED, THE CONTRACTOR SHALL DISPOSE OF ALL DEVICES AS REQUIRED.
3. COMMUNICATION DEVICES
   WHERE EXISTING TELEPHONE/INTERCOM AND CLOCK HEAD END EQUIPMENT, PHONES, SPEAKERS AND OTHER ASSOCIATED EQUIPMENT ARE TO BE REMOVED, THE CONTRACTOR SHALL DISPOSED OF ALL DEVICES AND EQUIPMENT AS REQUIRED.
4. FIRE ALARM
   WHERE EXISTING FIRE ALARM PANELS AND ASSOCIATED SMOKE, HEAT, DUCT DETECTORS, PULL STATIONS AND STROBE OR HORN UNITS ARE TO BE REMOVED, THE CONTRACTOR SHALL DISPOSED OF ALL DEVICES AND EQUIPMENT AS REQUIRED.
5. INTRUSION ALARM
   EXISTING INTRUSION ALARM SENSORS AND EQUIPMENT SHALL BE REMOVED WHERE INDICATED. RETURN ALL DEVICES TO THE SCHOOL DISTRICT MAINTENANCE FACILITIES.
6. POWER EQUIPMENT
   WHERE EXISTING SWITCHBOARDS, PANELBOARDS, LOAD CENTERS, TRANSFORMERS, DISCONNECT SWITCHES OR OTHER DISTRIBUTION EQUIPMENT ARE TO BE REMOVED, THE CONTRACTOR SHALL DISPOSED OF ALL DEVICES AND EQUIPMENT AS REQUIRED.
7. ALL BOXES, EXPOSED CONDUIT, WIRE, AND OTHER ITEMS ASSOCIATED WITH ELECTRICAL EQUIPMENT TO BE REMOVED, SHALL BE DISCONNECTED, REMOVED AND DISPOSED OF BY THE CONTRACTOR AS REQUIRED, UNLESS SPECIFICALLY NOTED OTHERWISE. CUT AND CAP CONCEALED CONDUITS. PATCH, SEAL AND REPAIR SURFACE TO MATCH ADJACENT AREA WHERE BOXES ARE REMOVED.

KEY NOTES:

1. DEMO AND REMOVE EXISTING POWER, DATA AND FIRE ALARM CONNECTIONS TO PANEL. FOR POWER, TAKE BACK TO PANEL AND MAKE SAFE.
2. EXISTING BATTING CAGE WITH LIGHTING AND RECEPTACLE TO BE RELOCATED BY DISTRICT.
3. EXISTING PARKING LOT POLE FIXTURE TO BE DEMO'D AND REMOVED. EXISTING CIRCUIT TO REMAIN FOR RECONNECTION TO NEW FIXTURES
4. EXISTING RELOCATABLE TO REMAIN. PANEL TO BE RE-FED. REFER TO E1.1 AND E1.1 FOR FURTHER INFO. FIRE ALARM DEVICES AND WIRING TO BE DEMO'D AND REMOVED.
5. EXISTING LIGHT POLE TO BE DEMO'D AND REMOVED.
6. DEMO EXISTING PULLBOX AND ASSOCIATED WIRING TO RELOS. NOTIFY ENGINEER OF ANY WIRING THAT MAY SUPPLY LOADS TO REMAIN.
7. DEMO EXISTING POWER POLES AND OVERHEAD FEEDERS BACK TO SWITCHBOARD 'DBR'
8. ABOVE GROUND CABLING.

DEMOLITION SITE PLAN | 1" = 20'-0" | 1

IDENTIFICATION STAMP
DIV. OF THE STATE ARCHITECT
APP. 04-118693 INC:
REVIEWED FOR
SS ☑ FLS ☑ ACS ☑
DATE: 03.13.2020

Revison	Date

Consultant

Engineer

studiowc
ARCHITECTURE + ENGINEERING
515 Encinitas Blvd, Ste 201, Encinitas, California 92024
Telephone: (760) 634-8800 Fax: (760) 452-7341

LICENSED ARCHITECT
ROBERT D. WEBB
C-28036
OCTOBER 31, 2021
STATE OF CALIFORNIA

CHET. HARRITT ELEM. SCHOOL
LRC & CLASSROOM ADDITION
SANTEE SCHOOL DISTRICT

DEMOLITION PLAN

Drawn: Author
Checked: Checker
Date:
Job: SSD-CFH-05

E10.1

REGISTERED PROFESSIONAL ENGINEER
CHRISTOPHER GEESE-HANSEN
NO.E 14781
Exp. 6-30-2021
ELECTRICAL
STATE OF CALIFORNIA

JOHNSON
CONSULTING ENGINEERS, INC.
Power | Lighting | Multimedia
Communications | Data Networking
12875 Brookprinter Place, Suite 300
Poway, CA 92064
P 858.679.4030 | F 858.513.0559
www.jce-inc.com

#19033 2/13/2020 2:01:03 PM

PARTIAL LIST OF APPLICABLE CODES AS OF JANUARY 1, 2017

2019 California Administrative Code (CAC), Part 1, Title 24 CCR*
2016 California Building Code (CBC), Part 2, Title 24 CCR
(2015 International Building Code, Vol. 1&2, and 2016 California amendments)
2016 California Electrical Code (CEC), Part 3, Title 24 CCR
(2014 National Electrical Code and 2016 California Amendments)
2016 California Mechanical Code (CMC), Part 4 Title 24 CCR
(2015 IAPMO Uniform Mechanical Code and 2016 California amendments)
2016 California Plumbing Code (CPC), Part 5, Title 24 CCR
(2015 IAPMO Uniform Plumbing Code and 2016 California amendments)
2016 California Energy Code (CEC), Part 6, Title 24 CCR
2016 California Fire Code (CFC), Part 9, Title 24 CCR
(2015 International Fire Code and 2016 California amendments)
2016 California Existing Building Code (CEBC), Part 10, Title 24 CCR
(2015 International Existing Building Code and 2016 California amendments)
2016 California Green Building Standards Code (CALGreen), Part 11, Title 24 CCR
2016 California Referenced Standards Code, Part 12, Title 24 CCR
Title 19 CCR, Public Safety, State Fire Marshal Regulations
2013 ASME A17.1/CSA B44-13 Safety Code for Elevators and Escalators

PARTIAL LIST OF APPLICABLE CODES AS OF JANUARY 1, 2017

NFPA 13- Standard for the Installation of Sprinkler Systems (CA amended).....2016 Edition
NFPA14- Standard for the Installation of Standpipe and Hose Systems.....2013 Edition
NFPA 17- Standard for Dry Chemical Extinguishing Systems.....2013 Edition
NFPA 17A- Standard for Wet Chemical Extinguishing Systems.....2013 Edition
NFPA 20- Standard for the Installation of Stationary Pumps for Fire Protection.....2016 Edition
NFPA 22- Standard for Water Tanks for Private Fire Protection.....2013 Edition
NFPA 24- Standard for the Installation of Private Fire Service Mains and Their Appurtenances.....2016 Edition
NFPA 72- National Fire Alarm and Signaling Code (CA amended).....2016 Edition
NFPA 80- Standard for Fire Doors and Other Opening Protectives.....2016 Edition
NFPA 2001- Standard on Clean Agent Fire Extinguishing Systems.....2015 Edition
UL 300- Standard for Fire Testing of Fire Extinguishing Systems for Protection
of Commercial Cooking Equipment.....2005 (R2010)
UL 464- Audible Signaling Devices for Fire Alarm and Signaling Systems, Including Accessories.....2003 Edition
UL 521- Standard for Heat Detectors for Fire Protective Signaling Systems.....1999 Edition
UL 1971- Standard for Signaling Devices for the Hearing Impaired.....2002 Edition
ICC 300- Standard for Bleachers, Folding and Telescopic Seating, and Grandstands.....2012 Edition

For a complete list of applicable NFPA standards refer to 2016 CBC (SFM) Chapter 35 and California Fire Code Chapter 80.

See California Building Code Chapter 35 for State of California amendments to the NFPA Standards and an overall listing of referenced standards.

* All parts of the 2016 California Building Code become affective January 1, 2017 except the affective date for the use of the 2016 Building Energy Efficiency Standards (Title 24, Part 1, Chapter 10) is February 25, 2016 and the effective date for the use of the California Administrative Code (Title 24, Part 1 Chapter 4) is January 8, 2019

FLOW TEST INFORMATION

TEST LOCATION: MESA RD @ PIONEER JOINT USE BALL FIELDS, FH#159
DATA: STATIC - 134 PSI RESIDUAL - 20 PSI OBSERVED FLOW - 6264 GPM
TEST ELEVATION: 0' BFF TEST DATE: 8-15-19

PADRE DAM Municipal Water District
9300 Fanita Parkway, Santee, CA
P.O. Box 719003, Santee, CA 92072

Fire Flow Request Form

Section A: TO BE COMPLETED BY CUSTOMER

Name: Christina Becker
Project Name: Chet F. Harritt LRC / Classroom Library Addition
Project Address: 9120 Arlette St , Santee, CA 92071
Phone: (619) 258-2323
E-mail: christina.becker@santeesd.net

Section B: TO BE COMPLETED BY PADRE DAM

Water Purveyor: Padre Dam Municipal Water District
Location of Test: Mesa Rd @Pioneer Joint Use Ball Fields FH #159

☑ Looped system ☐ Dead end system

Flow Test Results	
Hydrant Number[1]	159
Static Pressure (PSI)[1]	134
Residual Pressure at Fire Flow (PSI)[1]	127
Model Flow (GPM) at 20 PSI Residual[1]	11,396
Certified Flow (GPM) at 20 PSI Residual restricted by 10 ft/sec max	6,264

1. *See plat attached* velocity
2. *Information obtained using a computer model*
3. *Results are valid for 6 months*

Comments: Max certified flow limited from 16" PVC water main.

Courtney Mael
Name
Development Services Manager
Title
Signature
8.5.19
Date

Section C: PAYMENT

Modeled Fire Flow fees are $50 per fire hydrant
Check # 1205
Date Paid 1548

Cost Center: 00031
Object Acct: 44101

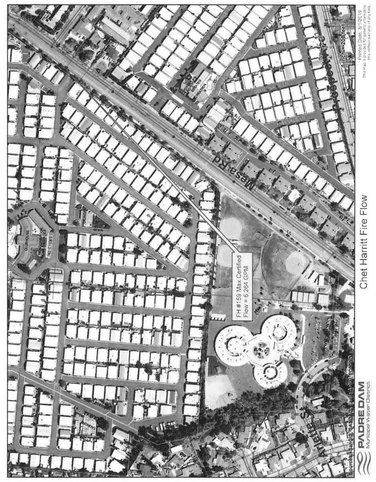

AUTOMATIC FIRE SPRINKLER LEGEND

SYMBOL	MANUFACTURER	TYPE	TEMP.	ORIFICE	K-FAC	MIN. PSI	FINISH	ESC
○	VIKING MICROFAST HP/QR	SSU	200	1/2"	5.6	7 PSI	BRASS	N/A
◉	VIKING MICROFAST HP/QR	SSP	155	1/2"	5.6	7 PSI	CHROME	REC
●	VIKING VK176	DRY PEND	155	1/2"	5.6	7 PSI	CHROME	CHROME

LEGEND

SYMBOL	DESCRIPTION
	CROSSMAIN
	BRANCHLINE
	VALVE
	HYDRAULIC CALCULATION REFERENCE NUMBER
	FLEXIBLE COUPLING - GRUVLOCK 7000 OR EQUIV.
	HANGER
	RESTRAINT
	ZONE OF INFLUENCE
	LONGITUDINAL BRACE
	LATERAL BRACE
	4 WAY BRACE
	PIPE TEE
	PIPE ELBOW
	PIPE INCREASER/REDUCER

FIRE PROTECTION GENERAL NOTES:

1. COORDINATE ALL WORK WITH ARCHITECTURAL, STRUCTURAL, AND ELECTRICAL TRADES. PIPE ROUTING SHOWN IS DIAGRAMMATIC. PROVIDE ALL OFFSETS, ETC., TO AVOID INTERFERENCES WITH EQUIPMENT, PIPING, DUCTWORK, LIGHTS, CONDUIT, ETC..
2. PROVIDE ACCESS PANELS WHERE REQUIRED FOR VALVES, TESTS, DRAINS, ETC. EXACT LOCATION MUST BE COORDINATED WITH ARCHITECTURAL DRAWINGS AND APPROVED BY ARCHITECT PRIOR TO INSTALLATION.
3. ALL PIPING SHALL BE SLOPED AS PER SPECS, UNLESS NOTED OTHERWISE ON DRAWINGS.
4. PROVIDE PORTABLE FIRE EXTINGUISHERS, QUANTITY AND SPACING, IN ACCORDANCE WITH TITLE 19 CALIFORNIA CODE OF REGULATIONS. SEE ARCHITECTURAL FOR LOCATIONS.
5. ALL SPRINKLER PIPING AND SUPPLY PIPING MUST BE MOUNTED AS COORDINATED WITH MECHANICAL AND ELECTRICAL DISCIPLINES. PROVIDE INDIVIDUAL DROPS FOR SPRINKLERS IN CROPPED CEILINGS.
6. SEAL ALL THROUGH PENETRATIONS WITH A METHOD APPROVED BY BUILDING OFFICIAL.
7. CONTRACTOR MUST VISIT THE BUILDING SITE, DETERMINE THE EXISTING CONDITIONS, AND MAKE ALLOWANCES FOR SUCH IN BID.
8. ALL NEW PIPING MUST BE COORDINATED WITH ALL OTHER TRADES TO AVOID DUCTWORK, LIGHTING, ETC.
9. NOTE CAREFULLY THAT THE FIRE PROTECTION DRAWINGS ARE INTENDED TO INDICATE, ONLY DIAGRAMMATICALLY, THE EXTENT AND GENERAL CHARACTER AND LOCATIONS OF THE WORK INCLUDED. PROVIDE ALL WORK OBVIOUSLY INTENDED, BUT HAVING MINOR DETAILS OMITTED OR NOT SHOWN. COMPLETE AS REQUIRED TO PERFORM THE FUNCTIONS INTENDED. FOLLOW THE ARCHITECTURAL AND/OR CONSTRUCTION SET OF DRAWINGS AND SPECIFICATIONS FOR BUILDING DETAILS AND FIT THE WORK OF THE FIRE PROTECTION DRAWINGS AND SPECIFICATIONS THERETO.
10. ALL SPRINKLER DEFLECTOR DISTANCE REQUIREMENTS SHALL BE IN ACCORDANCE TO THE STANDARDS OUTLINED IN NFPA 13.
11. SPRINKLERS SHALL BE CENTERED (+/- 2") IN CEILING TILES (BOTH WAYS IF SQUARE TILES). SEE DETAILS 1/FP401 AND 10/FP401.
12. WHERE SURFACE MOUNTED LIGHT FIXTURES DESTRUCT THE DISCHARGE PATTERN OF SPRINKLERS, THE DEFLECTORS SHALL BE MOUNTED BELOW THE BOTTOM OF THE LIGHT FIXTURES NOT TO EXCEED 12" BELOW ASSOCIATED CEILINGS.
13. SUCCESSFUL BIDDER SHALL REVIEW COMPONENTS OF SPRINKLER SYSTEM WITH ENGINEER PRIOR TO AWARD OF CONTRACT.
14. ALL SYSTEMS MUST BE DRAINABLE THROUGH VALVES LOCATED AT 5' TO 7' A.F.F DISCHARGED OUTSIDE ON GRADE AT 12" A.F.G
15. CONTRACTOR TO BE RESPONSIBLE FOR REPAIRING OR REPLACING ITEMS DAMAGED DURING CONSTRUCTIONS.
16. ALL SYSTEMS TO BE LEFT IN SERVICE PRIOR TO THE END OF EACH WORKDAY.
17. SPRINKLER PIPE SHALL BE PER NFPA STANDARDS. ACCORDING TO THEIR LISTING, "DYNA-FLO", "EZ-FLO" AND XL TYPES ARE ALSO ACCEPTABLE. ALL PIPING SHALL HAVE A CORROSION RESISTANCE RATIO OF 1.0 OR GREATER, CRIMP TYPE INSTALLATIONS ARE NOT ACCEPTABLE.
18. PIPE LENGTHS SHOWN DO NOT INCLUDE FITTING LENGTH.
19. ARCHITECT, ENGINEER, AND FIRE PROTECTION CONTRACTOR SHALL AFFIX THEIR SEAL, STAMP, AND SIGN ALL SUBMITTALS. OR PROVIDE DOCUMENTATION PER DSA IR A-18.
20. CONTRACTOR TO PROVIDE A COMPLETED AND SIGNED CONTRACTOR'S MATERIAL AND TEST CERTIFICATE FOR ABOVE GROUND PIPING TO THE LOCAL AUTHORITY.
21. CONTRACTOR TO PROVIDE UPDATED HYDRAULIC PLACARD ON SYSTEM RISER.
22. CONTRACTOR TO NOTIFY LOCAL AUTHORITY AND PROJECT INSPECTOR A MINIMUM OF 48 HOUR NOTICE FOR THE FOLLOWING TESTS
A. A TWO (2) HOUR, TWO HUNDRED (200) PSI HYDROSTATIC TEST
B. ALL CONTROL VALVES WILL BE FULLY OPENED AND CLOSED, BOTH BEFORE AND AFTER INSTALLATION
23. ALL SPRINKLER SYSTEM WORK COMPLETED UNDER THE SCOPE OF THIS PLAN REVIEW SHALL BE FIELD VERIFIED AND ACCEPTANCE TESTED IN ACCORDANCE WITH THE APPLICABLE CODES AND STANDARDS BY INSPECTION PERSONNEL.
24. ALL ARMOVERS TO BE 1" UNO.
25. UNDERGROUND MAINS AND LEAD-IN CONNECTIONS SHALL BE FLUSHED IN ACCORDANCE WITH NFPA 24 10.10.2.1.2 PRIOR TO CONNECTION TO DOWNSTREAM SYSTEM PIPING.
26. A COMPLETED AND SIGNED "CONTRACTOR'S MATERIALS & TEST CERTIFICATE FOR UNDERGROUND PIPING" SHALL BE INCLUDED IN SUBMITTAL.
27. PROVIDE SPARE SPRINKLER HEAD CABIENT, WRENCH, AND NO FEWER THAN 6 SPARE SPRINKLERS OF EACH TYPE.
28. THE END SPRINKLER ON EACH LINE SHALL BE RESTRAINED AGAINST EXCESSIVE VERTICAL AND LATERAL MOVEMENT (SEE 2/FP401).
29. THE INSPECTOR'S TEST PIPE SIZE SHALL BE 1", SMOOTH BORE, CORROSION RESISTANT ORIFICE, WITH 1/2" ORIFICE (EQUIVALENT OF SMALLEST SPRINKLER). THE DISCHARGE SHALL BE ROUTED TO THE EXTERIOR OF THE BUILDING.
30. A SELF-ADHESIVE LABEL SHALL BE PLACED ON THE FDC OR FIRE RISER AND SHALL INCLUDE THE DATE OF INSTALLATION AND/OR DATE SERVICE WAS PERFORMED AND LICENSE NUMBER OF PERSON PERFORMING SERVICE WORK.
31. SPRINKLER CONTRACTOR SHALL COMPLETE AND SIGN CONTRACTOR'S MATERIAL AND TEST CERTIFICATE FOR THE ABOVEGROUND PIPING. THIS FORM SHALL BE GIVEN TO THE PROJECT INSPECTOR WHO WILL FORWARD TO DSA FOR FILING IN PROJECT RECORDS.
32. FIRE ALRM PANEL VALVE MONITORING AND WATER FLOW ALARM AND TROUBLE SIGNALS SHALL BE DISTINCTLY DIFFERENT AND AUTOMATICALLY BE TRANSMITTED TO AN APPROVED CENTRAL STATION MONITORING COMPANY. CONNECTION TO CENTRAL STATION TESTING SHALL BE VERIFED BY THE PROJECT INSPECTOR.
33. THE SPRINKLER FLOW SWITCH SHALL BE TESTED TO CONFIRM ALARM WILL SOUND WITHIN 90 SECONDS OF INITIAL FLOW FROM INSPECTOR'S TEST VALVE. TEST SHALL BE WITNESSED BY THE PROJECT INSPECTOR.

IDENTIFICATION STAMP
DIV. OF THE STATE ARCHITECT
APP. 04-118693 INC:
REVIEWED FOR
SS ☑ FLS ☑ ACS ☑
DATE: 03.13.2020

Revison / Date

SALAS O'BRIEN
1258 COLLIER ROAD
ATLANTA, GA 30318-2308
404 881 5300
Consultant

LICENSED PROFESSIONAL ENGINEER ROBERT CARPENTER FP 2004 FIRE PROTECTION STATE OF CALIFORNIA
Engineer

studioWC
ARCHITECTURE + ENGINEERING
515 Encinitas Blvd, Ste 201, Encinitas, California 92024
Telephone: (760)753-4800 Fax: (760)452-7541

LICENSED ARCHITECT ROBERT D. WEBB C-28036 OCTOBER 31, 2021 STATE OF CALIFORNIA

CHET F. HARRITT ELEM. SCHOOL
LRC & CLASSROOM ADDITION
SANTEE SCHOOL DISTRICT

FIRE PROTECTION GENERAL

Drawn: TRC
Checked: TRC
Date: OCTOBER 18, 2019
Job:

FP001

1 FP002 SITE PLAN
1/16" = 1'-0"

IDENTIFICATION STAMP
DIV. OF THE STATE ARCHITECT
APP. 04-118693 INC:
REVIEWED FOR
SS ☑ FLS ☑ ACS ☑
DATE: 03.13.2020

Revison	Date

SALAS O'BRIEN
1255 COLLIER ROAD
ATLANTA, GA 30318-2308
404 881 5300
Consultant

LICENSED PROFESSIONAL ENGINEER
TIMOTHY ROBERT CAMPBELL
FP 2004
FIRE PROTECTION
STATE OF CALIFORNIA
Engineer

studiowc
ARCHITECTURE + ENGINEERING
515 Encinitas Blvd, Ste. 201, Encinitas, California 92024
Telephone: (760)753-6800 Fax: (760)452-7541

LICENSED ARCHITECT
ROBERT D. WEBB AJA
C-28036
OCTOBER 31, 2021
STATE OF CALIFORNIA

CHET F. HARRITT ELEM. SCHOOL
LRC & CLASSROOM ADDITION
SANTEE SCHOOL DISTRICT

FIRE PROTECTION SITE PLAN

Drawn: TRC
Checked: TRC
Date: OCTOBER 18, 2019
Job:

FP002

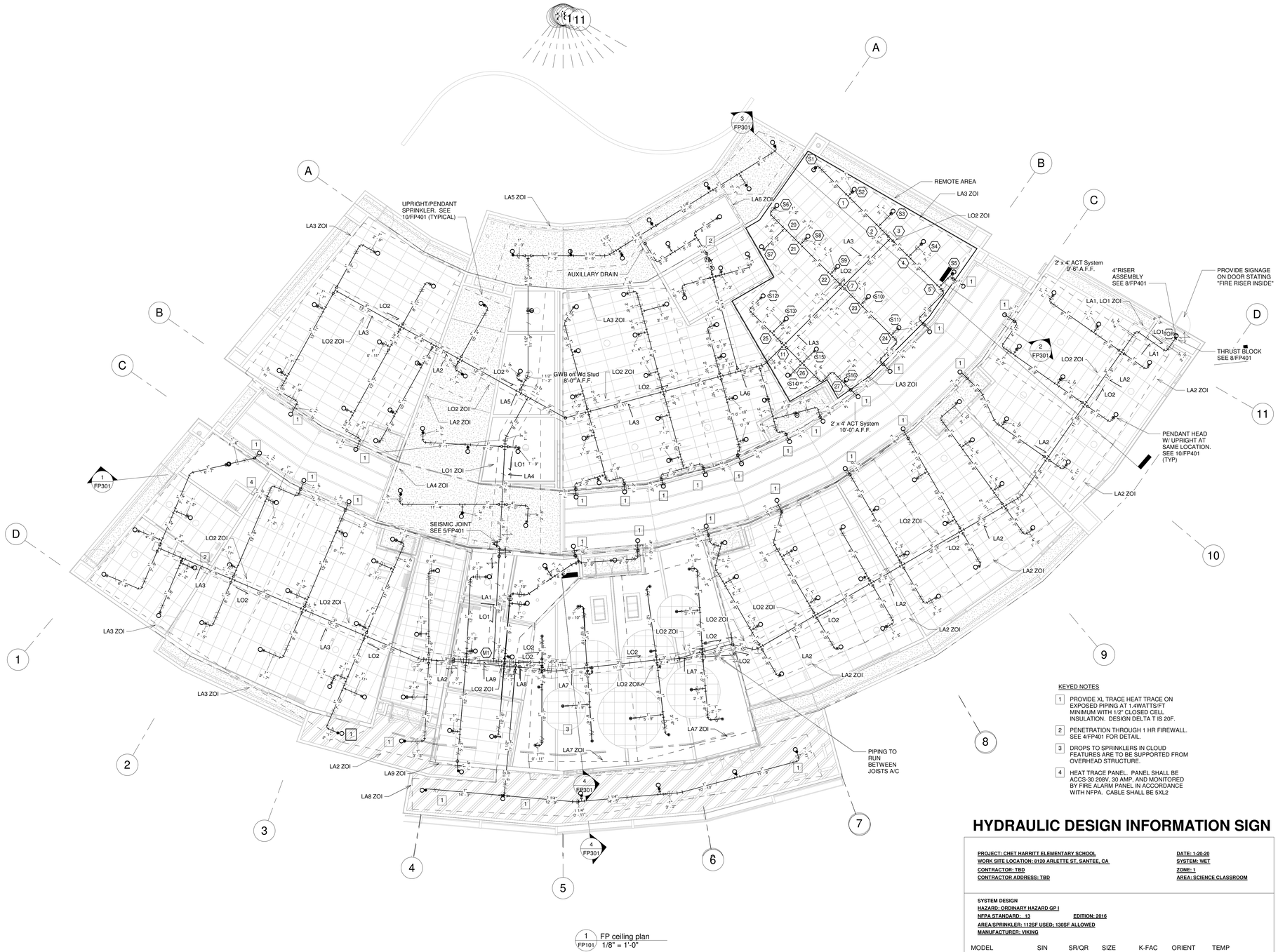

1 FP101 — FP ceiling plan
1/8" = 1'-0"

KEYED NOTES

1. PROVIDE XL TRACE HEAT TRACE ON EXPOSED PIPING AT 1.4WATTS/FT MINIMUM WITH 1/2" CLOSED CELL INSULATION. DESIGN DELTA T IS 20F.
2. PENETRATION THROUGH 1 HR FIREWALL. SEE 4/FP401 FOR DETAIL.
3. DROPS TO SPRINKLERS IN CLOUD FEATURES ARE TO BE SUPPORTED FROM OVERHEAD STRUCTURE.
4. HEAT TRACE PANEL. PANEL SHALL BE ACCS-30 208V, 30 AMP, AND MONITORED BY FIRE ALARM PANEL IN ACCORDANCE WITH NFPA. CABLE SHALL BE 5XL2

HYDRAULIC DESIGN INFORMATION SIGN

PROJECT: CHET HARRITT ELEMENTARY SCHOOL
WORK SITE LOCATION: 8120 ARLETTE ST, SANTEE, CA
CONTRACTOR: TBD
CONTRACTOR ADDRESS: TBD

DATE: 1-20-20
SYSTEM: WET
ZONE: 1
AREA: SCIENCE CLASSROOM

SYSTEM DESIGN
HAZARD: ORDINARY HAZARD GP I
NFPA STANDARD: 13 **EDITION: 2016**
AREA/SPRINKLER: 112SF USED: 130SF ALLOWED
MANUFACTURER: VIKING

MODEL	SIN	SR/OR	SIZE	K-FAC	ORIENT	TEMP
MICROFAST	VK302	QR	1/2"	5.6	PENDANT	155

CALCULATION DATA
DENSITY/AREA: 0.15 GPM/SF OVER MOST REMOTE 1200SF (REDUCED PER NFPA 13 11.2.3.2.3.1)
END SPRINKLER: 16.8 GPM @ 9.0 PSI
NUMBER OF SPRINKLERS FLOWING : 16
HOSE STREAM ALLOWANCE : 250 GPM
DEMAND: AT BASE OF RISER : 356.9 GPM @ 96.6 PSI
AT SOURCE : 606.9 GPM @ 105.0 PSI
AT PUMP DISCHARGE : N/A

IDENTIFICATION STAMP
DIV. OF THE STATE ARCHITECT
APP. 04-118693 INC:
REVIEWED FOR
SS ☑ FLS ☑ ACS ☑
DATE: 03.13.2020

Revision	Date

SALAS O'BRIEN
1258 COLLIER ROAD
ATLANTA, GA 30318-2308
404 881 5500
Consultant

LICENSED PROFESSIONAL ENGINEER — TIMOTHY ROBERT CATHERMAN — FP 2004 — FIRE PROTECTION — STATE OF CALIFORNIA
Engineer

studiowc
ARCHITECTURE + ENGINEERING
515 Encinitas Blvd, Ste 201, Encinitas, California 92024
Telephone: (760)634-8800 Fax: (760)452-7541

LICENSED ARCHITECT — ROBERT D. WEBB — C-28036 — OCTOBER 31, 2021 — STATE OF CALIFORNIA

CHET F. HARRITT ELEM. SCHOOL
LRC & CLASSROOM ADDITION
SANTEE SCHOOL DISTRICT

FIRE PROTECTION FLOOR PLAN

Drawn: TRC
Checked: TRC
Date: OCTOBER 18, 2019
Job:

FP101

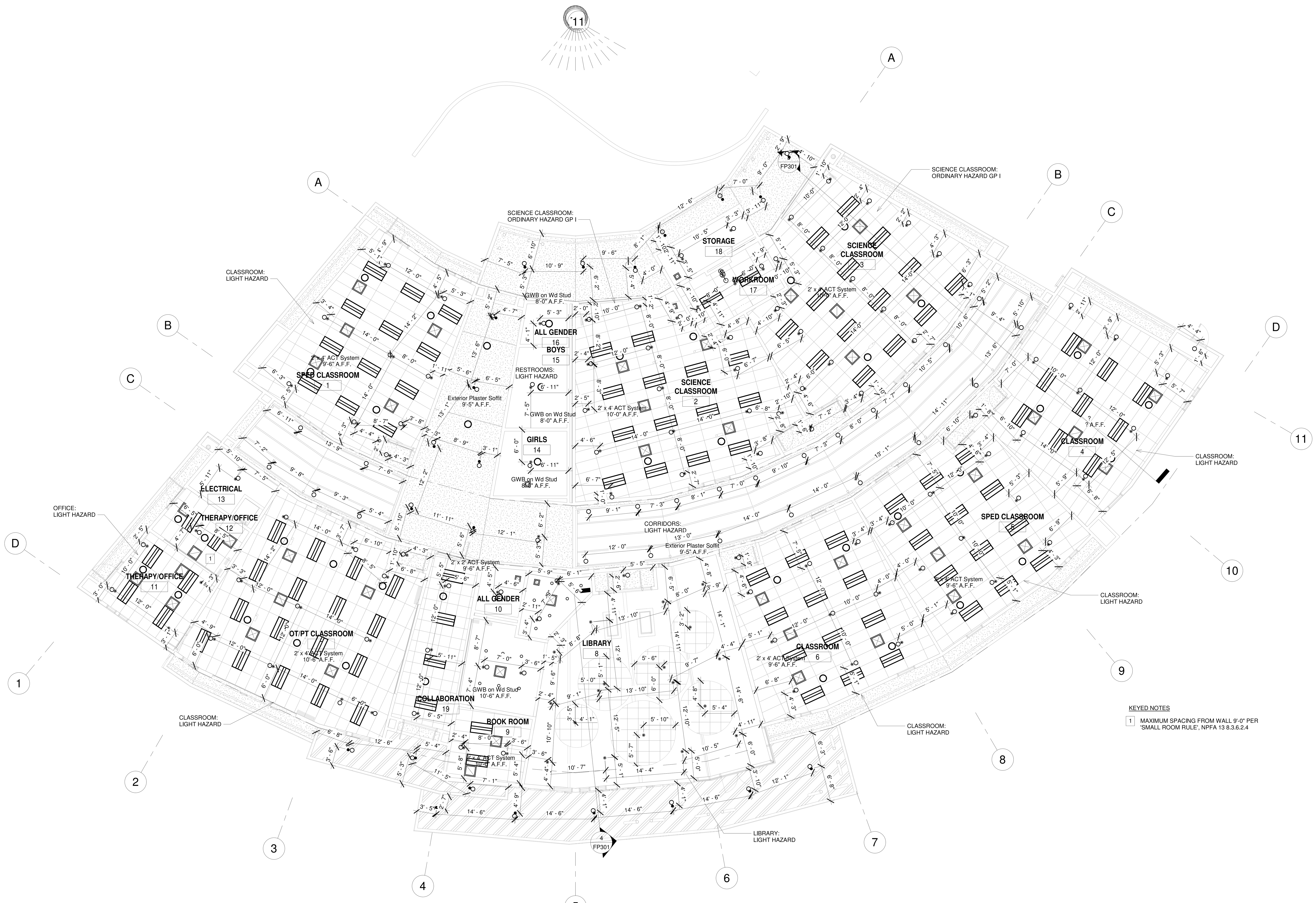

1 Head Layout
FP201 1/8" = 1'-0"

KEYED NOTES

1	MAXIMUM SPACING FROM WALL 9'-0" PER 'SMALL ROOM RULE', NPFA 13 8.3.6.2.4

IDENTIFICATION STAMP
DIV. OF THE STATE ARCHITECT
APP. 04-118693 INC:
REVIEWED FOR
SS ☑ FLS ☑ ACS ☑
DATE: 03.13.2020

Revison	Date

SALAS O'BRIEN
| expect a difference |
1255 COLLIER ROAD
ATLANTA, GA 30318-2308
404 881 5300
Consultant

LICENSED PROFESSIONAL ENGINEER
TIMOTHY ROBERT CAMPBELL
FP 2004
FIRE PROTECTION
STATE OF CALIFORNIA
Engineer

studioWC
ARCHITECTURE + ENGINEERING
515 Encinitas Blvd. Ste. 201, Encinitas, California 92024
Telephone: (760)753-6800 Fax: (760)452-7541

LICENSED ARCHITECT
ROBERT D. WEBB A.I.A.
C-28036
OCTOBER 31, 2021
STATE OF CALIFORNIA

CHET F. HARRITT ELEM. SCHOOL
LRC & CLASSROOM ADDITION
SANTEE SCHOOL DISTRICT

FIRE PROTECTION HEAD LAYOUT

Drawn: TRC
Checked: TRC
Date: OCTOBER 18, 2019
Job:

FP201

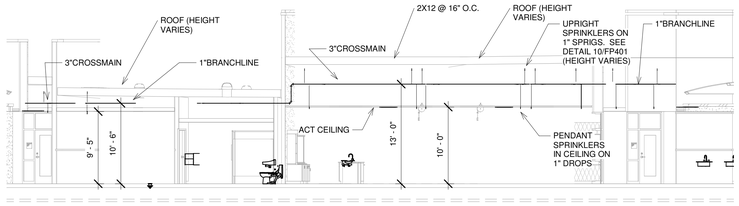

1 FP301 BUILDING SECTION 1
1/8" = 1'-0"

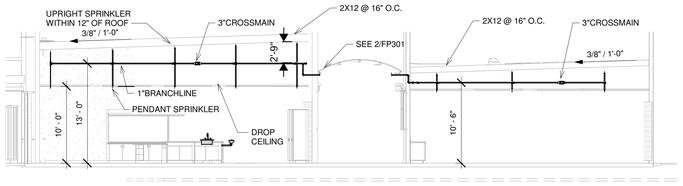

3 FP301 CLASSROOM SECTION
1/8" = 1'-0"

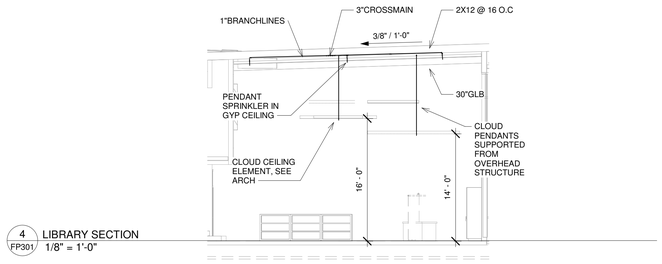

4 FP301 LIBRARY SECTION
1/8" = 1'-0"

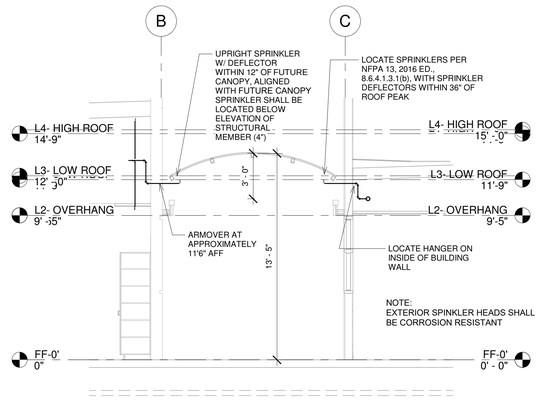

2 FP301 FUTURE CANOPY SECTION
1/4" = 1'-0"

IDENTIFICATION STAMP
DIV. OF THE STATE ARCHITECT
APP. 04-118693 INC:
REVIEWED FOR
SS ☑ FLS ☑ ACS ☑
DATE: 03.13.2020

Revison	Date

SALAS O'BRIEN
1258 COLLIER ROAD
ATLANTA, GA 30318-2308
404 881 5300
Consultant

LICENSED PROFESSIONAL ENGINEER TIMOTHY ROBERT CARPENTER FP 2004 FIRE PROTECTION STATE OF CALIFORNIA
Engineer

studioWC
ARCHITECTURE + ENGINEERING
515 Encinitas Blvd, Ste. 201, Encinitas, California 92024
Telephone: (760)753-8800 Fax: (760)452-7541

LICENSED ARCHITECT ROBERT D. WEBB R.D. Webb C-28036 OCTOBER 31, 2021 STATE OF CALIFORNIA

CHET F. HARRITT ELEM. SCHOOL
LRC & CLASSROOM ADDITION
SANTEE SCHOOL DISTRICT

FIRE PROTECTION ELEVATIONS

Drawn: TRC
Checked: TRC
Date: OCTOBER 18, 2019
Job:

FP301

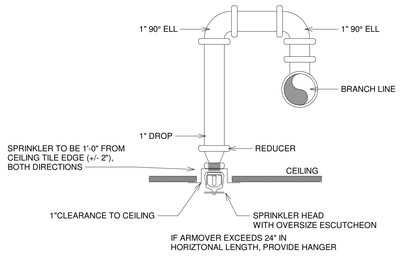

1 FP401 ARMOVER DETAIL
NOT TO SCALE

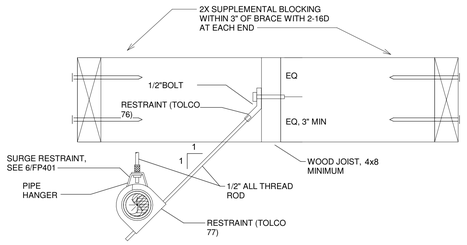

2 FP401 BRANCHLINE RESTRAINT
NOT TO SCALE

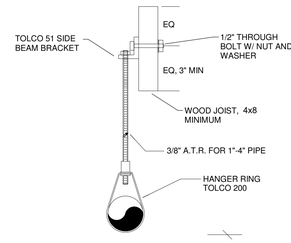

BEAM HANGER
N.T.S.

3 FP401 PIPE HANGER DETAIL
NOT TO SCALE

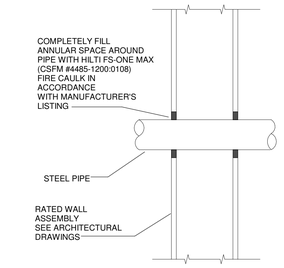

4 FP401 PIPE THROUGH 1HR WALL
NOT TO SCALE

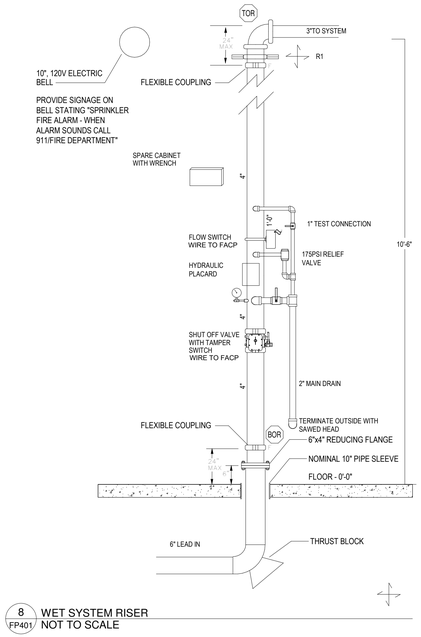

8 FP401 WET SYSTEM RISER
NOT TO SCALE

4" - 90 DEG BEND = (3.8SF)(150PSI/100PSI)(1000PSF/2000PSF) = 2.9SF
4" - 45 DEG BEND = 2.9SF X 0.541 = 1.6SF
4" - 22.5 DEG BEND = 2.9SF X 0.276 = 0.8SF

6" - 90 DEG BEND = (7.9)(150PSI/100PSI)(1000PSF/2000PSF) = 5.9SF
6" - 45 DEG BEND = 5.9SF X 0.541 = 3.2SF
6" - 22.5 DEG BEND = 2.9SF X 0.276 = 1.6SF

BASED ON A WATER PRESSURE OF 150 PSI AND A SOIL RESISTANCE OF 2000 POUNDS PER SQUARE FOOT, AND A SAFETY FACTOR OF 1.5 IN ACCORDANCE WITH NFPA 13 TABLE A.10.6.1(B)

BLOCK HEIGHT SHALL BE EQUAL TO OR LESS THAN ONE-HALF THE TOTAL DEPTH TO THE BOTTOM OF THE BLOCK, BUT NOT LESS THAN THE PIPE DIAMETER.

BLOCK HEIGHT SHOULD BE CHOSE SO THAT THE CALCULATED BLOCK WIDTH VARIES BETWEEN ONE AND TWO TIMES THE HEIGHT.

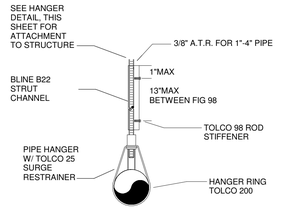

VERTICAL RESTRAINT TO BE INSTALLED WITHIN 4" OF PIPE CLAMP OF SEISMIC RESTRAINT AT ALL BRACE LOCATIONS
ROD STIFFENER TO BE INCLUDED ON ALL VERTICAL RESTRAINT RODS GREATER THAN 18"

6 FP401 VERTICAL RESTRAINT
NOT TO SCALE

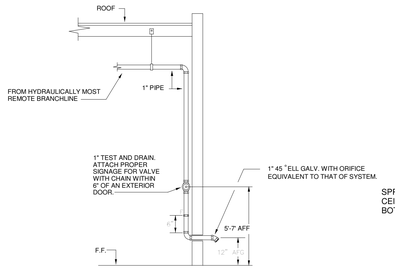

7 FP401 WET SYSTEM TEST AND DRAIN
NOT TO SCALE

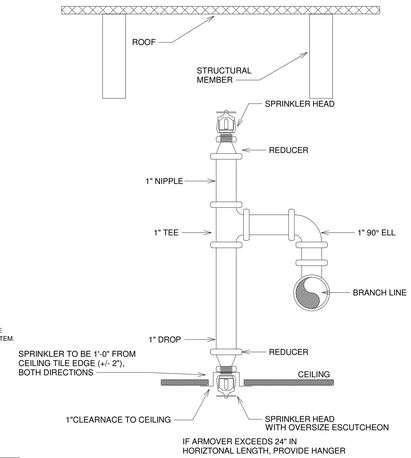

10 FP401 ARMOVER WITH UPRIGHT DETAIL
NOT TO SCALE

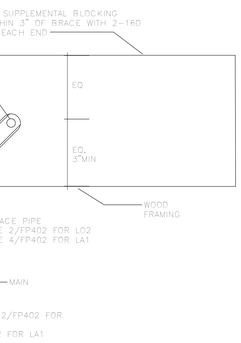

11 FP401 LA1 LO2 ATTACHMENT
NOT TO SCALE

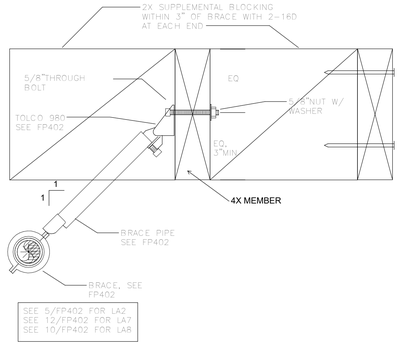

SEE 5/FP402 FOR LA2
SEE 12/FP402 FOR LA7
SEE 10/FP402 FOR LA8

12 FP401 LA2 LA7 LA8 ATTACHMENT
NOT TO SCALE

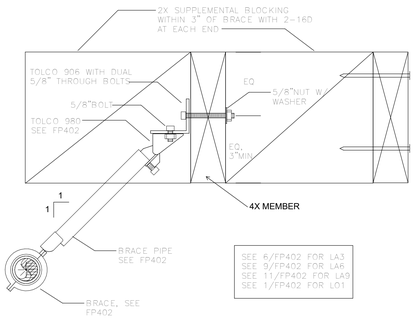

SEE 6/FP402 FOR LA3
SEE 9/FP402 FOR LA6
SEE 11/FP402 FOR LA9
SEE 1/FP402 FOR LO1

13 FP401 LA3 LA6 LA9 LO1 ATTACHMENT
NOT TO SCALE

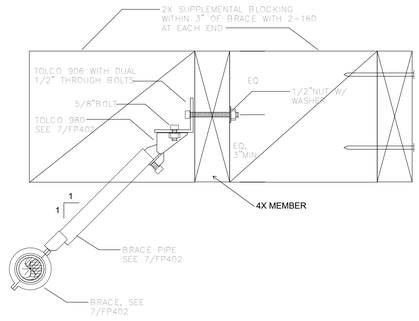

14 FP401 LA4 ATTACHMENT
NOT TO SCALE

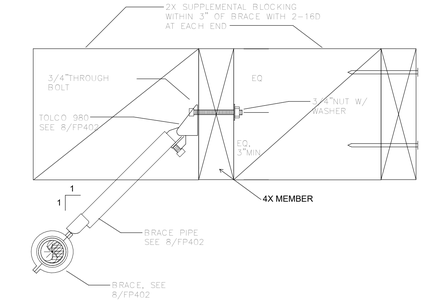

15 FP401 LA5 ATTACHMENT
NOT TO SCALE

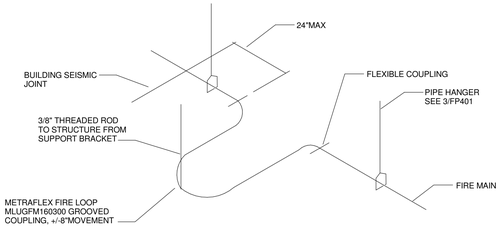

5 FP401 SEISMIC JOINT
NOT TO SCALE

IDENTIFICATION STAMP
DIV. OF THE STATE ARCHITECT
APP. 04-118693 INC:
REVIEWED FOR
SS ☑ FLS ☑ ACS ☑
DATE: 03.13.2020

Revison	Date

SALAS O'BRIEN
1258 COLLIER ROAD
ATLANTA, GA 30318-2308
404 881 5300
Consultant

LICENSED PROFESSIONAL ENGINEER ROBERT CAMPBELL FP 2004 FIRE PROTECTION STATE OF CALIFORNIA
Engineer

studioWC
ARCHITECTURE + ENGINEERING
515 Encinitas Blvd, Ste 201, Encinitas, California 92024
Telephone: (760)634-8800 Fax: (760)452-7541

LICENSED ARCHITECT ROBERT D. WEBB R.D. Webb C-28036 OCTOBER 31, 2021 STATE OF CALIFORNIA

CHET F. HARRITT ELEM. SCHOOL
LRC & CLASSROOM ADDITION
SANTEE SCHOOL DISTRICT

FIRE PROTECTION DETAILS

Drawn: TRC
Checked: TRC
Date: OCTOBER 18, 2019
Job:

FP401

1 SEISMIC BRACE LO1 (FP402) — NOT TO SCALE

TOLBrace™ Seismic Bracing Calculations

Project Address: Chet Harriet Elem. School / Santee School District / CA
Contractor: Salas O'brien **Address:** 1255 Collier Road, Atlanta GA 30318 **Phone:** **License:**
EATON Powering Business Worldwide
Job # 2019-70234 — Calculations based on 2016 NFPA Pamphlet #13

Brace Information
Maximum Brace Length: 7' 0" (2.134 m)
Diameter of Brace: 1" Sch.40
Type of Brace: Sch. 10
Angle of Brace: 45° Min.
Least Rad. of Gyration: 0.42" (11 mm)
L/R Value: 200
Max Horizontal Load: 1310 lbs (594 kg)

TOLCO™ Brace Components

TOLCO™ Component	Listed Load	Adjusted Load
Fig. 4L Clamp	2015 lbs (914 kg)	1425 lbs (646 kg)
Fig.980 Universal Swivel	2015 lbs (914 kg)	1425 lbs (646 kg)
See Fastener Information		

*Calculation Based on CONCENTRIC Loading
*Please Note: These calculations are for TOLCO™ components only. Use of any other components voids these calculations and the listing of the assembly.

Seismic Brace Assembly Detail

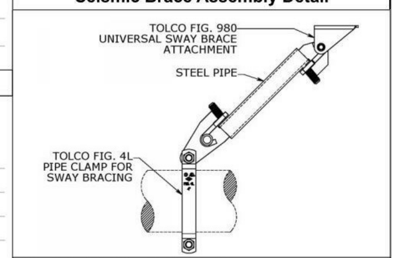

Fastener Information
Orientation to Connecting Surface: NFPA Type B
Fastener
Type: Dual Through-Bolts - Fig.906
Diameter: 5/8in. (16 mm)
Length: Minimum 4x Wood Member
Maximum Load: 540 lbs (245 kg)
Prying Factor: N/A

Brace Identification on Plans: LO1
Brace Type: Lateral [ ] Longitudinal [X] 4-Way [ ]

Sprinkler System Load Calculation (Fpw = CpWp) Cp = 0.7072

Diameter	Type	Length	Total Length	Weight Per Unit Length	Total Weight
3" (80 mm)	Sch. 10	50 ft (15.2 m)	50 ft (15.2 m)	7.94 lb/ft (11.82 kg/m)	397 lbs (180 kg)

Subtotal Weight: 397 lbs (180 kg)
Wp (incl. 15%): 457 lbs (207 kg)
Main Size 3" — Type/Sch. Sch. 10 — Spacing (ft) 50 — Total (Fpw): 323 lbs (146 kg)
Maximum Fpw per 9.3.5.5.2 (if applicable): N/A
(TOLBrace™ Version 8) Use of TOLBrace™ is subject to terms and conditions per the end user license agreement

SEE 13/FP401 FOR ATTACHMENT DETAIL

2 SEISMIC BRACE LO2 (FP402) — NOT TO SCALE

TOLBrace™ Seismic Bracing Calculations

Project Address: Chet Harriet Elem. School / Santee School District / CA
Contractor: Salas O'brien **Address:** 1255 Collier Road, Atlanta GA 30318 **Phone:** **License:**
EATON Powering Business Worldwide
Job # 2019-70234 — Calculations based on 2016 NFPA Pamphlet #13

Brace Information
Maximum Brace Length: 7' 0" (2.134 m)
Diameter of Brace: 1" Sch.40
Type of Brace: Sch. 10
Angle of Brace: 45° Min.
Least Rad. of Gyration: 0.42" (11 mm)
L/R Value: 200
Max Horizontal Load: 1310 lbs (594 kg)

TOLCO™ Brace Components

TOLCO™ Component	Listed Load	Adjusted Load
Fig. 4L Clamp	2015 lbs (914 kg)	1425 lbs (646 kg)
Fig.980 Universal Swivel	2015 lbs (914 kg)	1425 lbs (646 kg)
See Fastener Information		

*Calculation Based on CONCENTRIC Loading
*Please Note: These calculations are for TOLCO™ components only. Use of any other components voids these calculations and the listing of the assembly.

Seismic Brace Assembly Detail

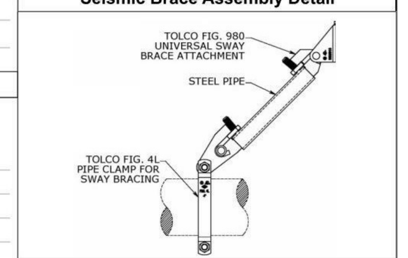

Fastener Information
Orientation to Connecting Surface: NFPA Type E
Fastener
Type: Through-Bolt
Diameter: 5/8in.
Length: 3-1/2in.
Maximum Load: 400 lbs (181 kg)
Prying Factor: N/A

Brace Identification on Plans: LO2
Brace Type: Lateral [ ] Longitudinal [X] 4-Way [ ]

Sprinkler System Load Calculation (Fpw = CpWp) Cp = 0.7072

Diameter	Type	Length	Total Length	Weight Per Unit Length	Total Weight
3" (80 mm)	Sch. 10	40 ft (12.2 m)	40 ft (12.2 m)	7.94 lb/ft (11.82 kg/m)	318 lbs (144 kg)

Subtotal Weight: 318 lbs (144 kg)
Wp (incl. 15%): 366 lbs (166 kg)
Main Size 3" — Type/Sch. Sch. 10 — Spacing (ft) 40 — Total (Fpw): 259 lbs (117 kg)
Maximum Fpw per 9.3.5.5.2 (if applicable): N/A
(TOLBrace™ Version 8) Use of TOLBrace™ is subject to terms and conditions per the end user license agreement

SEE 11/FP401 FOR ATTACHMENT DETAIL

3 SEISMIC BRACE R1 (FP402) — NOT TO SCALE

TOLBrace™ Seismic Bracing Calculations

Project Address: Chet Harriet Elem. School / Santee School District / CA
Contractor: Salas O'brien **Address:** 1255 Collier Road, Atlanta GA 30318 **Phone:** **License:**
EATON Powering Business Worldwide
Job # 2019-70234 — Calculations based on 2016 NFPA Pamphlet #13

Brace Information
Maximum Brace Length: 7' 0" (2.134 m)
Diameter of Brace: 1" Sch.40
Type of Brace: Sch. 10
Angle of Brace: 45° Min.
Least Rad. of Gyration: 0.42" (11 mm)
L/R Value: 200
Max Horizontal Load: 1310 lbs (594 kg)

TOLCO™ Brace Components

TOLCO™ Component	Listed Load	Adjusted Load
Fig. 4LA Clamp	1000 lbs (454 kg)	707 lbs (321 kg)
Fig.980 Universal Swivel	2015 lbs (914 kg)	1425 lbs (646 kg)
See Fastener Information		

*Calculation Based on CONCENTRIC Loading
*Please Note: These calculations are for TOLCO™ components only. Use of any other components voids these calculations and the listing of the assembly.

Seismic Brace Assembly Detail

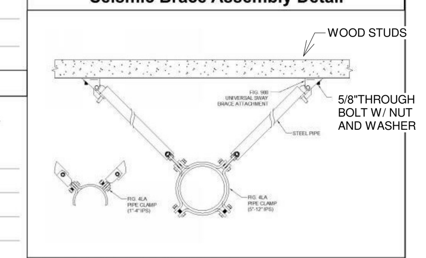

Fastener Information
Orientation to Connecting Surface: NFPA Type B
Fastener
Type: Through-Bolt
Diameter: 5/8in.
Length: 3-1/2in.
Maximum Load: 285 lbs (129 kg)
Prying Factor: N/A

Brace Identification on Plans: R1
Brace Type: Lateral [ ] Longitudinal [ ] 4-Way [X]

Sprinkler System Load Calculation (Fpw = CpWp) Cp = 0.7072

Diameter	Type	Length	Total Length	Weight Per Unit Length	Total Weight
4" (100 mm)	Sch. 10	10 ft (3 m)	10 ft (3 m)	11.78 lb/ft (17.53 kg/m)	118 lbs (54 kg)
3" (80 mm)	Sch. 40	3 ft (0.9 m)	3 ft (0.9 m)	10.82 lb/ft (16.1 kg/m)	32 lbs (15 kg)

Subtotal Weight: 150 lbs (68 kg)
Wp (incl. 15%): 172 lbs (78 kg)
Main Size 4" — Type/Sch. Sch. 10 — Spacing (ft) 10 — Total (Fpw): 122 lbs (55 kg)
Maximum Fpw per 9.3.5.5.2 (if applicable): N/A
(TOLBrace™ Version 8) Use of TOLBrace™ is subject to terms and conditions per the end user license agreement

4 SEISMIC BRACE LA1 (FP402) — NOT TO SCALE

TOLBrace™ Seismic Bracing Calculations

Project Address: Chet Harriet Elem. School / Santee School District / CA
Contractor: Salas O'brien **Address:** 1255 Collier Road, Atlanta GA 30318 **Phone:** **License:**
EATON Powering Business Worldwide
Job # 2019-70234 — Calculations based on 2016 NFPA Pamphlet #13

Brace Information
Maximum Brace Length: 7' 0" (2.134 m)
Diameter of Brace: 1" Sch.40
Type of Brace: Sch. 10
Angle of Brace: 45° Min.
Least Rad. of Gyration: 0.42" (11 mm)
L/R Value: 200
Max Horizontal Load: 1310 lbs (594 kg)

TOLCO™ Brace Components

TOLCO™ Component	Listed Load	Adjusted Load
Fig. 4LA Clamp	1000 lbs (454 kg)	707 lbs (321 kg)
Fig.980 Universal Swivel	2015 lbs (914 kg)	1425 lbs (646 kg)
See Fastener Information		

*Calculation Based on CONCENTRIC Loading
*Please Note: These calculations are for TOLCO™ components only. Use of any other components voids these calculations and the listing of the assembly.

Seismic Brace Assembly Detail

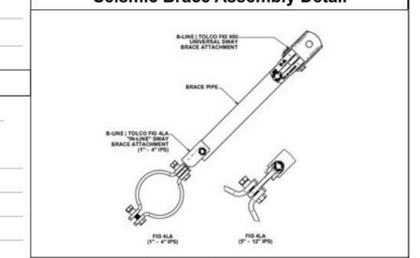

Fastener Information
Orientation to Connecting Surface: NFPA Type H
Fastener
Type: Through-Bolt
Diameter: 5/8in.
Length: 3-1/2in.
Maximum Load: 405 lbs (184 kg)
Prying Factor: N/A

Brace Identification on Plans: LA1
Brace Type: Lateral [X] Longitudinal [ ] 4-Way [ ]

Sprinkler System Load Calculation (Fpw = CpWp) Cp = 0.7072

Diameter	Type	Length	Total Length	Weight Per Unit Length	Total Weight
3" (80 mm)	Sch. 10	30 ft (9.1 m)	30 ft (9.1 m)	7.94 lb/ft (11.82 kg/m)	238 lbs (108 kg)

Subtotal Weight: 238 lbs (108 kg)
Wp (incl. 15%): 274 lbs (124 kg)
Main Size 3" — Type/Sch. Sch. 10 — Spacing (ft) 30 — Total (Fpw): 194 lbs (88 kg)
Maximum Fpw per 9.3.5.5.2 (if applicable): 633 lb (287 kg)
(TOLBrace™ Version 8) Use of TOLBrace™ is subject to terms and conditions per the end user license agreement

SEE 11/FP401 FOR ATTACHMENT DETAIL

5 SEISMIC BRACE LA2 (FP402) — NOT TO SCALE

TOLBrace™ Seismic Bracing Calculations

Project Address: Chet Harriet Elem. School / Santee School District / CA
Contractor: Salas O'brien **Address:** 1255 Collier Road, Atlanta GA 30318 **Phone:** **License:**
EATON Powering Business Worldwide
Job # 2019-70234 — Calculations based on 2016 NFPA Pamphlet #13

Brace Information
Maximum Brace Length: 7' 0" (2.134 m)
Diameter of Brace: 1" Sch.40
Type of Brace: Sch. 10
Angle of Brace: 45° Min.
Least Rad. of Gyration: 0.42" (11 mm)
L/R Value: 200
Max Horizontal Load: 1310 lbs (594 kg)

TOLCO™ Brace Components

TOLCO™ Component	Listed Load	Adjusted Load
Fig. 4LA Clamp	1000 lbs (454 kg)	707 lbs (321 kg)
Fig.980 Universal Swivel	2015 lbs (914 kg)	1425 lbs (646 kg)
See Fastener Information		

*Calculation Based on CONCENTRIC Loading
*Please Note: These calculations are for TOLCO™ components only. Use of any other components voids these calculations and the listing of the assembly.

Seismic Brace Assembly Detail

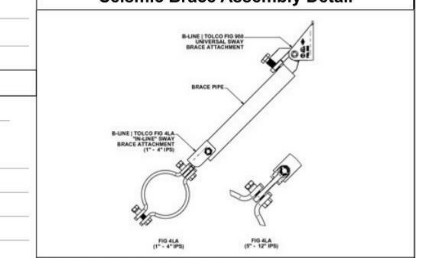

Fastener Information
Orientation to Connecting Surface: NFPA Type E
Fastener
Type: Through-Bolt
Diameter: 5/8in.
Length: 3-1/2in.
Maximum Load: 400 lbs (181 kg)
Prying Factor: N/A

Brace Identification on Plans: LA2
Brace Type: Lateral [X] Longitudinal [ ] 4-Way [ ]

Sprinkler System Load Calculation (Fpw = CpWp) Cp = 0.7072

Diameter	Type	Length	Total Length	Weight Per Unit Length	Total Weight
3" (80 mm)	Sch. 10	20 ft (6.1 m)	20 ft (6.1 m)	7.94 lb/ft (11.82 kg/m)	159 lbs (72 kg)
1" (25 mm)	Sch. 40	64 ft (19.5 m)	64 ft (19.5 m)	2.05 lb/ft (3.05 kg/m)	131 lbs (59 kg)

Subtotal Weight: 290 lbs (132 kg)
Wp (incl. 15%): 334 lbs (151 kg)
Main Size 3" — Type/Sch. Sch. 10 — Spacing (ft) 20 — Total (Fpw): 236 lbs (107 kg)
Maximum Fpw per 9.3.5.5.2 (if applicable): 966 lb (438 kg)
(TOLBrace™ Version 8) Use of TOLBrace™ is subject to terms and conditions per the end user license agreement

SEE 12/FP401 FOR ATTACHMENT DETAIL

6 SEISMIC BRACE LA3 (FP402) — NOT TO SCALE

TOLBrace™ Seismic Bracing Calculations

Project Address: Chet Harriet Elem. School / Santee School District / CA
Contractor: Salas O'brien **Address:** 1255 Collier Road, Atlanta GA 30318 **Phone:** **License:**
EATON Powering Business Worldwide
Job # 2019-70234 — Calculations based on 2016 NFPA Pamphlet #13

Brace Information
Maximum Brace Length: 7' 0" (2.134 m)
Diameter of Brace: 1" Sch.40
Type of Brace: Sch. 10
Angle of Brace: 45° Min.
Least Rad. of Gyration: 0.42" (11 mm)
L/R Value: 200
Max Horizontal Load: 1310 lbs (594 kg)

TOLCO™ Brace Components

TOLCO™ Component	Listed Load	Adjusted Load
Fig. 4LA Clamp	1000 lbs (454 kg)	707 lbs (321 kg)
Fig.980 Universal Swivel	2015 lbs (914 kg)	1425 lbs (646 kg)
See Fastener Information		

*Calculation Based on CONCENTRIC Loading
*Please Note: These calculations are for TOLCO™ components only. Use of any other components voids these calculations and the listing of the assembly.

Seismic Brace Assembly Detail

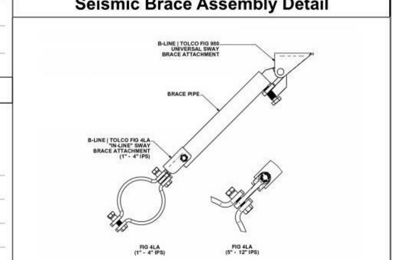

Fastener Information
Orientation to Connecting Surface: NFPA Type B
Fastener
Type: Dual Through-Bolts - Fig.906
Diameter: 5/8in. (16 mm)
Length: Minimum 4x Wood Member
Maximum Load: 720 lbs (327 kg)
Prying Factor: N/A

Brace Identification on Plans: LA3
Brace Type: Lateral [X] Longitudinal [ ] 4-Way [ ]

Sprinkler System Load Calculation (Fpw = CpWp) Cp = 0.7072

Diameter	Type	Length	Total Length	Weight Per Unit Length	Total Weight
3" (80 mm)	Sch. 10	20 ft (6.1 m)	20 ft (6.1 m)	7.94 lb/ft (11.82 kg/m)	159 lbs (72 kg)
1" (25 mm)	Sch. 40	146 ft (44.5 m)	146 ft (44.5 m)	2.05 lb/ft (3.05 kg/m)	299 lbs (136 kg)

Subtotal Weight: 458 lbs (208 kg)
Wp (incl. 15%): 527 lbs (239 kg)
Main Size 3" — Type/Sch. Sch. 10 — Spacing (ft) 20 — Total (Fpw): 372 lbs (169 kg)
Maximum Fpw per 9.3.5.5.2 (if applicable): 966 lb (438 kg)
(TOLBrace™ Version 8) Use of TOLBrace™ is subject to terms and conditions per the end user license agreement

SEE 13/FP401 FOR ATTACHMENT DETAIL

7 SEISMIC BRACE LA4 (FP402) — NOT TO SCALE

TOLBrace™ Seismic Bracing Calculations

Project Address: Chet Harriet Elem. School / Santee School District / CA
Contractor: Salas O'brien **Address:** 1255 Collier Road, Atlanta GA 30318 **Phone:** **License:**
EATON Powering Business Worldwide
Job # 2019-70234 — Calculations based on 2016 NFPA Pamphlet #13

Brace Information
Maximum Brace Length: 7' 0" (2.134 m)
Diameter of Brace: 1" Sch.40
Type of Brace: Sch. 10
Angle of Brace: 45° Min.
Least Rad. of Gyration: 0.42" (11 mm)
L/R Value: 200
Max Horizontal Load: 1310 lbs (594 kg)

TOLCO™ Brace Components

TOLCO™ Component	Listed Load	Adjusted Load
Fig. 4LA Clamp	1000 lbs (454 kg)	707 lbs (321 kg)
Fig.980 Universal Swivel	2015 lbs (914 kg)	1425 lbs (646 kg)
See Fastener Information		

*Calculation Based on CONCENTRIC Loading
*Please Note: These calculations are for TOLCO™ components only. Use of any other components voids these calculations and the listing of the assembly.

Seismic Brace Assembly Detail

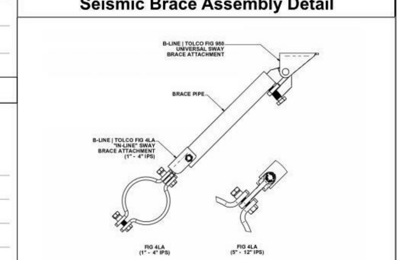

Fastener Information
Orientation to Connecting Surface: NFPA Type B
Fastener
Type: Dual Through-Bolts - Fig.906
Diameter: 1/2in. (13 mm)
Length: Minimum 4x Wood Member
Maximum Load: 440 lbs (200 kg)
Prying Factor: N/A

Brace Identification on Plans: LA4
Brace Type: Lateral [X] Longitudinal [ ] 4-Way [ ]

Sprinkler System Load Calculation (Fpw = CpWp) Cp = 0.7072

Diameter	Type	Length	Total Length	Weight Per Unit Length	Total Weight
3" (80 mm)	Sch. 10	30 ft (9.1 m)	30 ft (9.1 m)	7.94 lb/ft (11.82 kg/m)	238 lbs (108 kg)
1" (25 mm)	Sch. 40	55 ft (16.8 m)	55 ft (16.8 m)	2.05 lb/ft (3.05 kg/m)	113 lbs (51 kg)

Subtotal Weight: 351 lbs (159 kg)
Wp (incl. 15%): 404 lbs (183 kg)
Main Size 3" — Type/Sch. Sch. 10 — Spacing (ft) 30 — Total (Fpw): 285 lbs (129 kg)
Maximum Fpw per 9.3.5.5.2 (if applicable): 633 lb (287 kg)
(TOLBrace™ Version 8) Use of TOLBrace™ is subject to terms and conditions per the end user license agreement

SEE 14/FP401 FOR ATTACHMENT DETAIL

8 SEISMIC BRACE LA5 (FP402) — NOT TO SCALE

TOLBrace™ Seismic Bracing Calculations

Project Address: Chet Harriet Elem. School / Santee School District / CA
Contractor: Salas O'brien **Address:** 1255 Collier Road, Atlanta GA 30318 **Phone:** **License:**
EATON Powering Business Worldwide
Job # 2019-70234 — Calculations based on 2016 NFPA Pamphlet #13

Brace Information
Maximum Brace Length: 7' 0" (2.134 m)
Diameter of Brace: 1" Sch.40
Type of Brace: Sch. 10
Angle of Brace: 45° Min.
Least Rad. of Gyration: 0.42" (11 mm)
L/R Value: 200
Max Horizontal Load: 1310 lbs (594 kg)

TOLCO™ Brace Components

TOLCO™ Component	Listed Load	Adjusted Load
Fig. 4LA Clamp	1000 lbs (454 kg)	707 lbs (321 kg)
Fig.980 Universal Swivel	2015 lbs (914 kg)	1425 lbs (646 kg)
See Fastener Information		

*Calculation Based on CONCENTRIC Loading
*Please Note: These calculations are for TOLCO™ components only. Use of any other components voids these calculations and the listing of the assembly.

Seismic Brace Assembly Detail

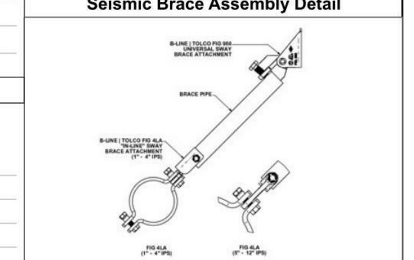

Fastener Information
Orientation to Connecting Surface: NFPA Type E
Fastener
Type: Through-Bolt
Diameter: 5/8in.
Length: 3-1/2in.
Maximum Load: 400 lbs (181 kg)
Prying Factor: N/A

Brace Identification on Plans: LA5
Brace Type: Lateral [X] Longitudinal [ ] 4-Way [ ]

Sprinkler System Load Calculation (Fpw = CpWp) Cp = 0.7072

Diameter	Type	Length	Total Length	Weight Per Unit Length	Total Weight
2.5" (65 mm)	Sch. 10	16 ft (4.9 m)	16 ft (4.9 m)	5.89 lb/ft (8.77 kg/m)	94 lbs (43 kg)
1.5" (40 mm)	Sch. 40	49 ft (14.9 m)	49 ft (14.9 m)	3.61 lb/ft (5.37 kg/m)	177 lbs (80 kg)
1.25" (32 mm)	Sch. 40	13 ft (4 m)	13 ft (4 m)	2.93 lb/ft (4.36 kg/m)	38 lbs (17 kg)
1" (25 mm)	Sch. 40	30 ft (9.1 m)	30 ft (9.1 m)	2.05 lb/ft (3.05 kg/m)	61 lbs (28 kg)

Subtotal Weight: 370 lbs (168 kg)
Wp (incl. 15%): 425 lbs (193 kg)
Main Size 2.5" — Type/Sch. Sch. 10 — Spacing (ft) 16 — Total (Fpw): 301 lbs (136 kg)
Maximum Fpw per 9.3.5.5.2 (if applicable): 641 lb (290 kg)
(TOLBrace™ Version 8) Use of TOLBrace™ is subject to terms and conditions per the end user license agreement

SEE 15/FP401 FOR ATTACHMENT DETAIL

9 SEISMIC BRACE LA6 (FP402) — NOT TO SCALE

TOLBrace™ Seismic Bracing Calculations

Project Address: Chet Harriet Elem. School / Santee School District / CA
Contractor: Salas O'brien **Address:** 1255 Collier Road, Atlanta GA 30318 **Phone:** **License:**
EATON Powering Business Worldwide
Job # 2019-70234 — Calculations based on 2016 NFPA Pamphlet #13

Brace Information
Maximum Brace Length: 7' 0" (2.134 m)
Diameter of Brace: 1" Sch.40
Type of Brace: Sch. 10
Angle of Brace: 45° Min.
Least Rad. of Gyration: 0.42" (11 mm)
L/R Value: 200
Max Horizontal Load: 1310 lbs (594 kg)

TOLCO™ Brace Components

TOLCO™ Component	Listed Load	Adjusted Load
Fig. 4LA Clamp	1000 lbs (454 kg)	707 lbs (321 kg)
Fig.980 Universal Swivel	2015 lbs (914 kg)	1425 lbs (646 kg)
See Fastener Information		

*Calculation Based on CONCENTRIC Loading
*Please Note: These calculations are for TOLCO™ components only. Use of any other components voids these calculations and the listing of the assembly.

Seismic Brace Assembly Detail

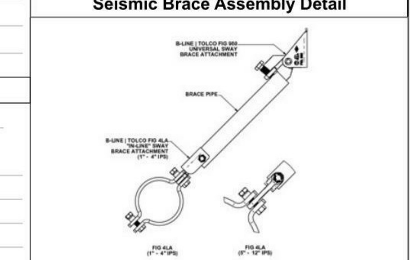

Fastener Information
Orientation to Connecting Surface: NFPA Type E
Fastener
Type: Through-Bolt
Diameter: 5/8in.
Length: 3-1/2in.
Maximum Load: 400 lbs (181 kg)
Prying Factor: N/A

Brace Identification on Plans: LA6
Brace Type: Lateral [X] Longitudinal [ ] 4-Way [ ]

Sprinkler System Load Calculation (Fpw = CpWp) Cp = 0.7072

Diameter	Type	Length	Total Length	Weight Per Unit Length	Total Weight
2.5" (65 mm)	Sch. 10	10 ft (3 m)	10 ft (3 m)	5.89 lb/ft (8.77 kg/m)	59 lbs (27 kg)
1.25" (32 mm)	Sch. 40	18 ft (5.5 m)	18 ft (5.5 m)	2.93 lb/ft (4.36 kg/m)	53 lbs (24 kg)
1" (25 mm)	Sch. 40	91 ft (27.7 m)	91 ft (27.7 m)	2.05 lb/ft (3.05 kg/m)	187 lbs (85 kg)

Subtotal Weight: 299 lbs (136 kg)
Wp (incl. 15%): 344 lbs (156 kg)
Main Size 2.5" — Type/Sch. Sch. 10 — Spacing (ft) 10 — Total (Fpw): 243 lbs (110 kg)
Maximum Fpw per 9.3.5.5.2 (if applicable): 641 lb (290 kg)
(TOLBrace™ Version 8) Use of TOLBrace™ is subject to terms and conditions per the end user license agreement

SEE 13/FP401 FOR ATTACHMENT DETAIL

10 SEISMIC BRACE LA8 (FP402) — NOT TO SCALE

TOLBrace™ Seismic Bracing Calculations

Project Address: Chet Harriet Elem. School / Santee School District / CA
Contractor: Salas O'brien **Address:** 1255 Collier Road, Atlanta GA 30318 **Phone:** **License:**
EATON Powering Business Worldwide
Job # 2019-70234 — Calculations based on 2016 NFPA Pamphlet #13

Brace Information
Maximum Brace Length: 7' 0" (2.134 m)
Diameter of Brace: 1" Sch.40
Type of Brace: Sch. 10
Angle of Brace: 45° Min.
Least Rad. of Gyration: 0.42" (11 mm)
L/R Value: 200
Max Horizontal Load: 1310 lbs (594 kg)

TOLCO™ Brace Components

TOLCO™ Component	Listed Load	Adjusted Load
Fig. 4LA Clamp	1000 lbs (454 kg)	707 lbs (321 kg)
Fig.980 Universal Swivel	2015 lbs (914 kg)	1425 lbs (646 kg)
See Fastener Information		

*Calculation Based on CONCENTRIC Loading
*Please Note: These calculations are for TOLCO™ components only. Use of any other components voids these calculations and the listing of the assembly.

Seismic Brace Assembly Detail

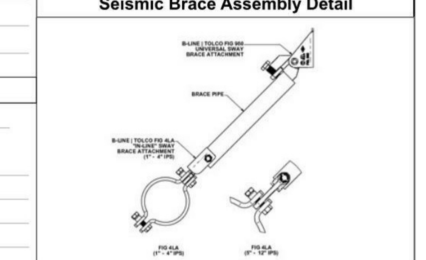

Fastener Information
Orientation to Connecting Surface: NFPA Type E
Fastener
Type: Through-Bolt
Diameter: 5/8in.
Length: 3-1/2in.
Maximum Load: 400 lbs (181 kg)
Prying Factor: N/A

Brace Identification on Plans: LA8
Brace Type: Lateral [X] Longitudinal [ ] 4-Way [ ]

Sprinkler System Load Calculation (Fpw = CpWp) Cp = 0.7072

Diameter	Type	Length	Total Length	Weight Per Unit Length	Total Weight
3" (80 mm)	Sch. 10	6 ft (1.8 m)	6 ft (1.8 m)	7.94 lb/ft (11.82 kg/m)	48 lbs (22 kg)
1.5" (40 mm)	Sch. 40	25 ft (7.6 m)	25 ft (7.6 m)	3.61 lb/ft (5.37 kg/m)	90 lbs (41 kg)
1.25" (32 mm)	Sch. 40	29 ft (8.8 m)	29 ft (8.8 m)	2.93 lb/ft (4.36 kg/m)	85 lbs (39 kg)
1" (25 mm)	Sch. 40	54 ft (16.5 m)	54 ft (16.5 m)	2.05 lb/ft (3.05 kg/m)	111 lbs (50 kg)

Subtotal Weight: 334 lbs (152 kg)
Wp (incl. 15%): 384 lbs (174 kg)
Main Size 3" — Type/Sch. Sch. 10 — Spacing (ft) 6 — Total (Fpw): 272 lbs (123 kg)
Maximum Fpw per 9.3.5.5.2 (if applicable): 966 lb (438 kg)
(TOLBrace™ Version 8) Use of TOLBrace™ is subject to terms and conditions per the end user license agreement

SEE 12/FP401 FOR ATTACHMENT DETAIL

11 SEISMIC BRACE LA9 (FP402) — NOT TO SCALE

TOLBrace™ Seismic Bracing Calculations

Project Address: Chet Harriet Elem. School / Santee School District / CA
Contractor: Salas O'brien **Address:** 1255 Collier Road, Atlanta GA 30318 **Phone:** **License:**
EATON Powering Business Worldwide
Job # 2019-70234 — Calculations based on 2016 NFPA Pamphlet #13

Brace Information
Maximum Brace Length: 7' 0" (2.134 m)
Diameter of Brace: 1" Sch.40
Type of Brace: Sch. 10
Angle of Brace: 45° Min.
Least Rad. of Gyration: 0.42" (11 mm)
L/R Value: 200
Max Horizontal Load: 1310 lbs (594 kg)

TOLCO™ Brace Components

TOLCO™ Component	Listed Load	Adjusted Load
Fig. 4LA Clamp	1000 lbs (454 kg)	707 lbs (321 kg)
Fig.980 Universal Swivel	2015 lbs (914 kg)	1425 lbs (646 kg)
See Fastener Information		

*Calculation Based on CONCENTRIC Loading
*Please Note: These calculations are for TOLCO™ components only. Use of any other components voids these calculations and the listing of the assembly.

Seismic Brace Assembly Detail

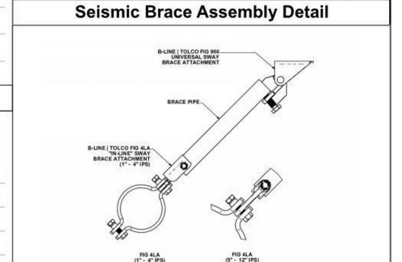

Fastener Information
Orientation to Connecting Surface: NFPA Type B
Fastener
Type: Dual Through-Bolts - Fig.906
Diameter: 5/8in. (16 mm)
Length: Minimum 4x Wood Member
Maximum Load: 720 lbs (327 kg)
Prying Factor: N/A

Brace Identification on Plans: LA9
Brace Type: Lateral [X] Longitudinal [ ] 4-Way [ ]

Sprinkler System Load Calculation (Fpw = CpWp) Cp = 0.7072

Diameter	Type	Length	Total Length	Weight Per Unit Length	Total Weight
3" (80 mm)	Sch. 10	11 ft (3.4 m)	11 ft (3.4 m)	7.94 lb/ft (11.82 kg/m)	87 lbs (39 kg)
1" (25 mm)	Sch. 40	230 ft (70.1 m)	230 ft (70.1 m)	2.05 lb/ft (3.05 kg/m)	471 lbs (214 kg)

Subtotal Weight: 558 lbs (253 kg)
Wp (incl. 15%): 642 lbs (291 kg)
Main Size 3" — Type/Sch. Sch. 10 — Spacing (ft) 11 — Total (Fpw): 454 lbs (206 kg)
Maximum Fpw per 9.3.5.5.2 (if applicable): 966 lb (438 kg)
(TOLBrace™ Version 8) Use of TOLBrace™ is subject to terms and conditions per the end user license agreement

SEE 13/FP401 FOR ATTACHMENT DETAIL

12 SEISMIC BRACE LA7 (FP402) — NOT TO SCALE

TOLBrace™ Seismic Bracing Calculations

Project Address: Chet Harriet Elem. School / Santee School District / CA
Contractor: Salas O'brien **Address:** 1255 Collier Road, Atlanta GA 30318 **Phone:** **License:**
EATON Powering Business Worldwide
Job # 2019-70234 — Calculations based on 2016 NFPA Pamphlet #13

Brace Information
Maximum Brace Length: 7' 0" (2.134 m)
Diameter of Brace: 1" Sch.40
Type of Brace: Sch. 10
Angle of Brace: 45° Min.
Least Rad. of Gyration: 0.42" (11 mm)
L/R Value: 200
Max Horizontal Load: 1310 lbs (594 kg)

TOLCO™ Brace Components

TOLCO™ Component	Listed Load	Adjusted Load
Fig. 4LA Clamp	1000 lbs (454 kg)	707 lbs (321 kg)
Fig.980 Universal Swivel	2015 lbs (914 kg)	1425 lbs (646 kg)
See Fastener Information		

*Calculation Based on CONCENTRIC Loading
*Please Note: These calculations are for TOLCO™ components only. Use of any other components voids these calculations and the listing of the assembly.

Seismic Brace Assembly Detail

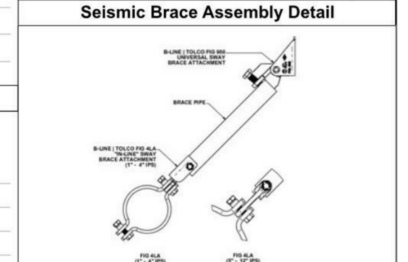

Fastener Information
Orientation to Connecting Surface: NFPA Type E
Fastener
Type: Through-Bolt
Diameter: 5/8in.
Length: 3-1/2in.
Maximum Load: 400 lbs (181 kg)
Prying Factor: N/A

Brace Identification on Plans: LA7
Brace Type: Lateral [X] Longitudinal [ ] 4-Way [ ]

Sprinkler System Load Calculation (Fpw = CpWp) Cp = 0.7072

Diameter	Type	Length	Total Length	Weight Per Unit Length	Total Weight
3" (80 mm)	Sch. 10	20 ft (6.1 m)	20 ft (6.1 m)	7.94 lb/ft (11.82 kg/m)	159 lbs (72 kg)
1" (25 mm)	Sch. 40	96 ft (29.3 m)	96 ft (29.3 m)	2.05 lb/ft (3.05 kg/m)	197 lbs (89 kg)

Subtotal Weight: 356 lbs (161 kg)
Wp (incl. 15%): 409 lbs (186 kg)
Main Size 3" — Type/Sch. Sch. 10 — Spacing (ft) 20 — Total (Fpw): 290 lbs (131 kg)
Maximum Fpw per 9.3.5.5.2 (if applicable): 966 lb (438 kg)
(TOLBrace™ Version 8) Use of TOLBrace™ is subject to terms and conditions per the end user license agreement

SEE 12/FP401 FOR ATTACHMENT DETAIL

IDENTIFICATION STAMP
DIV. OF THE STATE ARCHITECT
APP. 04-118693 INC:
REVIEWED FOR
SS ☑ FLS ☑ ACS ☑
DATE: 03.13.2020

Date | Revison

Consultant: SALAS O'BRIEN | expect a difference |
1255 COLLIER ROAD
ATLANTA, GA 30318-2308
404 881 5300

Engineer: LICENSED PROFESSIONAL ENGINEER TIMOTHY ROBERT CAMPBELL FP 2004 FIRE PROTECTION STATE OF CALIFORNIA

studioWC ARCHITECTURE + ENGINEERING
515 Encinitas Blvd. Ste. 201, Encinitas, California 92024
Telephone: (760)753-6800 Fax: (760)452-7541

LICENSED ARCHITECT ROBERT D. WEBB A.I.A. C-28036 OCTOBER 31, 2021 STATE OF CALIFORNIA

CHET F. HARRITT ELEM. SCHOOL
LRC & CLASSROOM ADDITION
SANTEE SCHOOL DISTRICT

FIRE PROTECTION SEISMIC DETAILS

Drawn: TRC
Checked: TRC
Date: OCTOBER 18, 2019
Job:

FP402